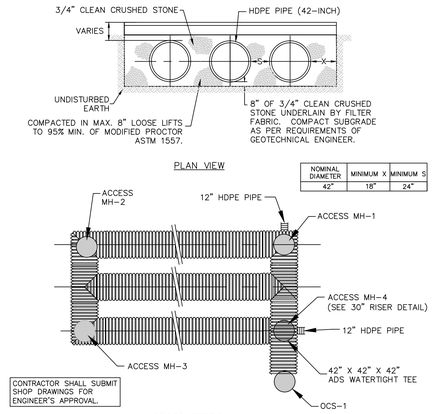

NOMINAL DIAMETER	MINIMUM X	MINIMUM S
42"	18"	24"

NOTES:

1. ALL DETENTION SYSTEMS SHALL BE INSTALLED IN ACCORDANCE WITH ASTM D2321, "STANDARD PRACTICE FOR UNDERGROUND INSTALLATION OF THERMOPLASTIC PIPE FOR SEWERS AND OTHER GRAVITY FLOW APPLICATIONS", LATEST EDITION.
2. MEASURES SHOULD BE TAKEN TO PREVENT MIGRATION OF NATIVE FINES INTO BACKFILL MATERIAL, WHEN REQUIRED.
3. ALL INSTALLATION AND MATERIALS SHALL BE IN ACCORDANCE WITH MANUFACTURER'S RECOMMENDATIONS.
4. REFER TO GRADING AND DRAINAGE PLAN FOR TOTAL NUMBER OF PIPES AND LAYOUT.

UNDERGROUND DETENTION DETAIL

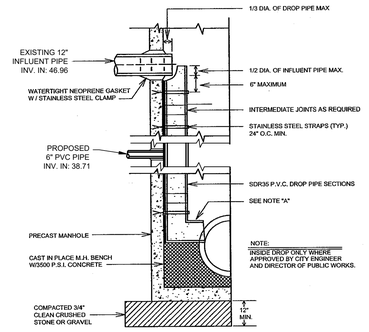

A. INSIDE DROP CAN ONLY BE USED WHERE APPROVED BY CITY ENGINEER AND DIRECTOR OF PUBLIC WORKS.

B. SOFFIT OF DROP PIPE ELBOW AT CHANNEL FACE IS EQUAL TO THE SOFFIT OF THE INFLUENT INTERCEPTOR PIPE. BENCH ELEVATION AT CHANNEL TO PROVIDE 2" MIN. CONCRETE COVER OVER ELBOW (3" MIN. ABOVE INFLUENT INTERCEPTOR SOFFIT ELEV.) CHANNEL EDGE ON EACH SIDE TO BE SAME ELEVATION.

C. INFLUENT PIPE SECTION INTO MANHOLE MUST BE DUCTILE IRON.

D. NOMINAL DIAMETER OF P.V.C. DROP SECTION TO BE EQUAL TO INFLUENT PIPE I.D. PLUS 2 INCHES (MINIMUM).

E. STAINLESS STEEL STAPS TO BE ANCHOR BOLTED TO MANHOLE WALL IN A MANNER TO ALLOW FOR FUTURE REMOVAL. FIRST STRAP TO BE PLACED A MAXIMUM DISTANCE OF 6 INCHES BELOW THE INLET PIPE INVERT. REMAINING STRAPS TO BE A MIN. OF 24" ON CENTER AND WITHIN 6" BELOW ANY REQUIRED INTERMEDIATE JOINTS.

F. ALL JOINTS ON DROP SECTION TO BE RUBBER GASKET OR FRICTION TYPE (SOLVENT CEMENT JOINTS PROHIBITED).

CITY OF NEW BRUNSWICK
SPECIAL DROP CONNECTION DETAIL

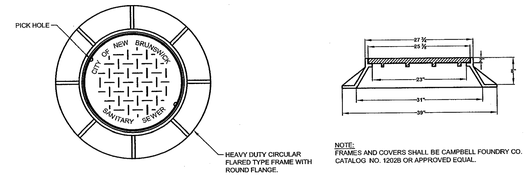

NOTE:
FRAMES AND COVERS SHALL BE CAMPBELL FOUNDRY CO. CATALOG NO. 12028 OR APPROVED EQUAL.

ONLY MANHOLE LIDS WITHIN THE PUBLIC RIGHT-OF-WAY ARE TO BE EMBOSSED.

CITY OF NEW BRUNSWICK
SANITARY MANHOLE FRAME & COVER

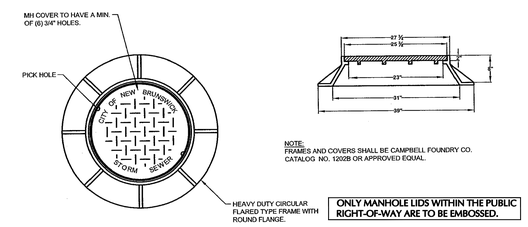

NOTE:
FRAMES AND COVERS SHALL BE CAMPBELL FOUNDRY CO. CATALOG NO. 12028 OR APPROVED EQUAL.

ONLY MANHOLE LIDS WITHIN THE PUBLIC RIGHT-OF-WAY ARE TO BE EMBOSSED.

CITY OF NEW BRUNSWICK
STORM MANHOLE FRAME & COVER

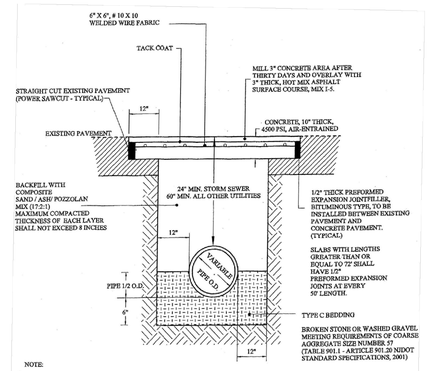

THIS DETAIL APPLIES TO ANY WORK WITHIN COUNTY RIGHT-OF-WAY (FRENCH STREET).

MIDDLESEX COUNTY
TRENCH AND BEDDING IN PAVED AREA

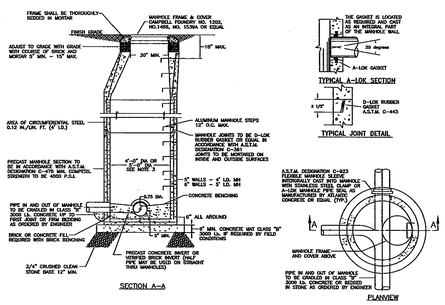

STANDARD MANHOLE DETAIL

(NOT TO SCALE)

MANHOLE NOTES

1. EXTERIOR SURFACES TO RECEIVE TWO COATS OF BITUMINOUS WATERPROOFING. ALL JOINTS TO BE MADE WATERTIGHT AND FACKNED BY MORE THAN ONE COATING OR EQUAL.
2. ALL CONSTRUCTION SHALL BE IN ACCORDANCE WITH THE LATEST O.S.H.A. STANDARDS AND THE N.J.U.C.C.
3. I.D. 4'-0" FOR SEWERS ≤ 24" DIA. I.D. 5'-0" FOR SEWERS 24"- 30" DIA. I.D. 6'-0" FOR SEWERS 36" DIA.
4. ANNULAR SPACE BETWEEN PIPE, SLEEVE AND CONCRETE TO BE CAULKED WITH A FLEXIBLE MATERIAL.
5. CONNECTIONS INTO EXISTING MANHOLES SHALL BE MADE WITH A CORE DRILLED HOLE AND A RUBBER ADAPTOR AS APPROVED BY THE ENGINEER.

SPECIFICATIONS

-THE CONCRETE IS DESIGNED TO OBTAIN A STRENGTH OF 4000 PSI IN 28 DAYS

-THE REINFORCING STEEL HAS A YIELD STRENGTH OF 40000 PSI

-THE MANHOLE IS DESIGNED TO MEET THE REQUIREMENTS OF ASTM C-478, "Precast Reinforced Concrete Manhole Sections."

-ALL HORIZONTAL JOINT LOCATIONS ARE TO BE DETERMINED BY THE PROD. DEPARTMENT

-A-LOK AND Z-A-LOK GASKETS ARE DESIGNED TO MEET THE REQUIREMENTS OF ASTM C-923, "Rubber Connectors Between Reinforced Concrete Manhole Structures and Pipes."

-THE REINFORCED CONCRETE STRUCTURE IS DESIGNED TO WITHSTAND HS-20 LIVE LOAD (AASHTO STANDARD) (Vehicle and/or Frame and Cover by Others.)

-THE BASE SLAB HAS BEEN DESIGNED FOR A MAXIMUM EARTH COVER OF 30 FT. (Earth Cover = F.G. to Top of Base Slab.)

-THE O-LOK GASKET IS DESIGNED TO MEET THE REQUIREMENTS OF ASTM C-443, "Joints for Circular Concrete Sewer and Culvert Pipe, Using Rubber Gaskets"

ALUMINUM STEP NOTES

NOTE:
PORTION OF STEP EMBEDDED IN MASONRY TO BE COATED WITH COAL TAR PITCH VARNISH OR OTHER SPECIFIED MATERIAL.

NOTES:

1. MH FRAMES & COVER TO BE CAMPBELL FOUNDRY CO. #12028 OR EQUAL (HEAVY DUTY)
2. MH. 12028 (HEAVY DUTY) WEIGHTS: FRAME WEIGHT 140 LBS. COVER WEIGHT 140 LBS. FRAME WEIGHT 340 LBS.
3. FRAME AND COVER TO BE COATED WITH ASPHALTIC BITUMINOUS COATING.
4. WATERTIGHT MANHOLE FRAMES AND COVERS SHALL BE FURNISHED AT LOCATIONS SHOWN ON THE PLANS OR AS DIRECTED BY THE ENGINEER
5. LOCKING TYPE MANHOLE FRAMES AND COVERS SHALL BE FURNISHED IN ALL EASEMENTS AND AS DIRECTED BY THE ENGINEER

ALUMINUM LADDER RUNG

NOTE:
PORTION EMBEDDED IN MASONRY TO BE COATED WITH COAL TAR PITCH VARNISH OR OTHER SPECIFIED MATERIAL.

CITY OF NEW BRUNSWICK
STANDARD MANHOLE DETAIL

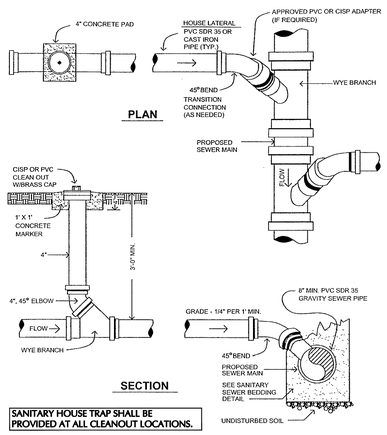

SANITARY HOUSE TRAP SHALL BE PROVIDED AT ALL CLEANOUT LOCATIONS.

CITY OF NEW BRUNSWICK
SANITARY SEWER LATERAL DETAIL

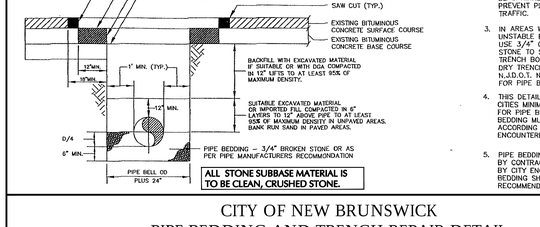

ALL STONE SUBBASE MATERIAL IS TO BE CLEAN, CRUSHED STONE.

NOTES

1. LIMITS OF TRENCH TO BE CUT TO A NEAT EDGE AND TACK-COATED WITH EMULSIFIED ASPHALT
2. ON AREAS SEALED WITH AC-20, DRY SAND SHALL BE SPRINKLED TO PREVENT PICKUP BY TRAFFIC.
3. IN AREAS WITH WET OR UNSTABLE BOTTOMS USE 3/4" CLEAN BROKEN STONE TO STABILIZE TRENCH BOTTOM, OR IN DRY TRENCHES WITH N.J.D.O.T. NO. 57 STONE FOR PIPE BEDDING.
4. THIS DETAIL REPRESENTS THE CITIES MINIMUM REQUIREMENTS FOR PIPE BEDDING. ACTUAL BEDDING MUST BE DESIGNED ACCORDING TO SPECIFIC CONDITIONS ENCOUNTERED IN THE FIELD.
5. PIPE BEDDING TO BE DESIGNED BY CONTRACTOR AND REVIEWED BY CITY ENGINEER. MINIMUM ORDINARY BEDDING SHALL BE CLASS "C" OR AS RECOMMENDED BY MANUFACTURER.

CITY OF NEW BRUNSWICK
PIPE BEDDING AND TRENCH REPAIR DETAIL

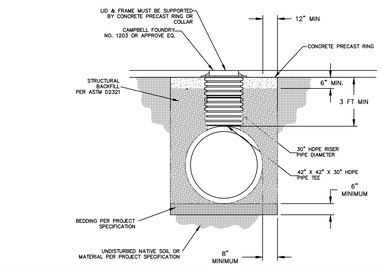

30" UNDERGROUND DETENTION RISER

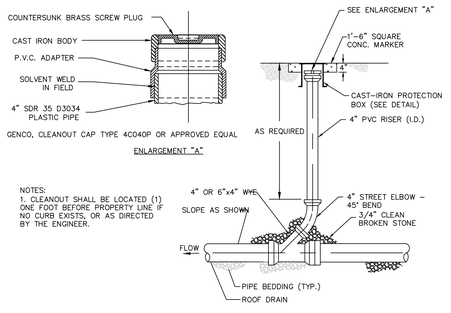

NOTES:
1. CLEANOUT SHALL BE LOCATED (1) ONE FOOT BEFORE PROPERTY LINE IF NO CURB EXISTS, OR AS DIRECTED BY THE ENGINEER.

STORM CLEANOUT DETAIL

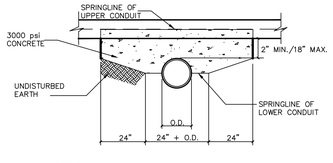

NOTES:

1. CRADLE FOR LOWER PIPE TO BE CARRIED 24" IN EACH DIRECTION BEYOND THE WALLS OF THE UPPER CONDUIT.
2. CONCRETE CRADLE NOT NEEDED WHEN CLEARANCE EXCEEDS 18".
3. CRADLE TO EXTEND FROM SPRINGLINE OF THE LOWER CONDUIT TO THE SPRINGLINE OF THE UPPER CONDUIT.

CONCRETE CRADLE

1. CONTRACTOR SHALL SUBMIT SHOP DRAWINGS TO ENGINEER FOR REVIEW AND APPROVAL.
2. STRUCTURES SHALL BE CONSTRUCTED WITH A CONCRETE CHANNEL (4,000 PSI) TO APPROXIMATELY THREE QUARTERS THE HEIGHT OF THE LARGEST PIPE ENTERING OR EXITING THE STRUCTURE.
3. ALL CONCRETE FOR STRUCTURES SHALL BE 4,000 PSI.
4. THE LADDER RUNGS IN ALL STRUCTURES MUST BE INSTALLED SUCH THAT INDIVIDUALS ENTERING OR EXITING THE STRUCTURE FACE TRAFFIC.
5. STRUCTURES SHALL BE DESIGNED TO AASHTO HS-20 LOADING.
6. CONCRETE STRUCTURE REINFORCING AS PER ASTM A-185.
7. STRUCTURES OVER EIGHT FEET IN HEIGHT SHALL HAVE 12-INCH THICK WALLS.

MANHOLE AND CATCH BASIN NOTES

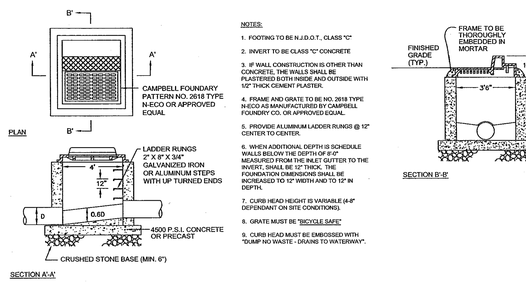

NOTES:

1. FOOTING TO BE N.J.D.O.T., CLASS "C"
2. INVERT TO BE CLASS "C" CONCRETE
3. IF WALL CONSTRUCTION IS OTHER THAN CONCRETE, THE WALLS SHALL BE PLASTERED BOTH INSIDE AND OUTSIDE WITH 1/2" THICK CEMENT PLASTER.
4. FRAME AND GRATE TO BE NO. 2618 TYPE N-ECO AS MANUFACTURED BY CAMPBELL FOUNDRY CO. OR APPROVED EQUAL.
5. PROVIDE ALUMINUM LADDER RUNGS @ 12" CENTER TO CENTER.
6. WHEN ADDITIONAL DEPTH IS SCHEDULE WALLS BELOW THE DEPTH OF 8'-0" MEASURED FROM THE INLET GUTTER TO THE INVERT, SHALL BE 12" THICK. THE FOUNDATION DIMENSIONS SHALL BE INCREASED 10 12" WIDTH AND TO 15" IN DEPTH.
7. CURB HEAD HEIGHT IS VARIABLE (4-8" DEPENDANT ON SITE CONDITIONS).
8. GRATE MUST BE "BICYCLE SAFE"
9. CURB HEAD MUST BE EMBOSSED WITH "DUMP NO WASTE - DRAINS TO WATERWAY".

CITY OF NEW BRUNSWICK
INLET TYPE 'B' DETAIL

Date	Description	No.

REVISIONS

CHRISTIAN M. ROCHE — DATE SIGNED
NJ PROFESSIONAL ENGINEER
NJ LICENSE No. 24GE04988100

LANGAN
Langan Engineering, Environmental, Surveying, Landscape Architecture and Geology, D.P.C.
989 Lenox Drive, Suite 124
Lawrenceville, NJ 08648
T: 609.282.8000 F: 609.282.8001 www.langan.com
NJ CERTIFICATE OF AUTHORIZATION No. 24GA27996400

Project
RWJ BARNABAS HEALTH SOUTH BUILDING EXPANSION
BLOCK 24.01, LOT 1.01
CITY OF NEW BRUNSWICK
MIDDLESEX COUNTY — NEW JERSEY

Drawing Title
CONSTRUCTION DETAILS

Project No. 130141101
Date 05/24/2019
Drawn By GGB
Checked By CMR
Drawing No. CS-502
Sheet 11 of 11

© 2015 Langan

Filename: \\langan.com\data\LAW\data\130141101\Project Data\CAD\01\Sheetfiles\Site Plan Set\130141101-CS501-0101 (28.01).dwg Date: 5/23/2019 Time: 18:40 User: gbalyout Style Table: Langan.stb Layout: 30X42 CS-502