BLOCK 838 LOT 16 QUALIFICATION CODE _____ ADDRESS (SITE) 1672 FORGE POND RD PERMIT NO. 17-0785

CONSTRUCTION PERMIT APPLICATION

C-17-000680

Applicant Completes: Sections I, II, III (optional), IV, VI, and VII

I. IDENTIFICATION

1. Proposed Work Site at: 1672 FORGE POND RD (BRICK)
2. Name of Owner in Fee: JOSEPH FILI
   Tel [redacted] e-mail _____
   Address Same as above (street, municipality, zip code)
3. Ownership in Fee: Public _____ Private X
4. Principal Contractor: Vivint Solar Developer, LLC Tel. (732) 831-7712
   Address 687 Prospect St Unit 470-480 e-mail camille.harvey-reyes@vivintsolar.com
   Lakewood, NJ 08701
   License No. OR, if new home, Builder Reg. No. 13VH06589300 Exp. Date 03-13-17
   Home Improvement Contractor Registration No. or Exemption Reason (if applicable): _____
   Federal Emp. ID No. 80-0756438 FAX: (856) 439-6810
5. Architect or Engineer Scott E. Wyssling P.E. Contact Scott Wyssling
   Address 321 West Main Street, Boonton, N.J. 07005 e-mail swyssling@wysslingconsulting.com
   Tel. (973) 335-3500 FAX: (973) 335-3535
6. Responsible Person in Charge once Work has Begun Camille Harvey-Reyes
   Tel. (732) 831-7712 FAX: (732) 597-7497

V. FEE SUMMARY (for office use only)

		Update	Update
1. Building	$ 150		
2. Electrical	425		
3. Plumbing			
4. Fire Protection			
5. Elevator Devices			
6. Subtotal			
7. Less 20% for State Plan Review	$		
8. Subtotal	$		
9. State Permit Surcharge Fee	2% 103		
10. Subtotal			
11. Cert. of Occupancy			
12. Other			
13. TOTAL	$ 678		

VI. BUILDING/SITE CHARACTERISTICS (office use only)

1. Number of Stories _____
2. Height of Structure _____ ft.
3. Area — Largest Floor _____ sq. ft.
4. New Building Area _____ sq. ft.
5. Volume of New Structure _____ cu. ft.
6. Max. Live Load _____ 6.67 kw
7. Max. Occupancy Load _____
8. If Industrialized Building: State Approved ____ HUD ____
9. Total Land Area Disturbed _____ sq. ft.
10. Flood Hazard Zone _____
11. Base Flood Elevation _____ ft.
12. Wetlands yes ____ no ____

IIa. PROPOSED WORK

- ☐ Minor Work
- ☐ Repair
- ☐ Asbestos Abat. -Subch. 8
- ☐ New Building
- ☒ Alteration
- ☐ Lead Hazard Abatement
- ☐ Addition
- ☐ Renovation
- ☐ Radon Remediation
- ☐ Demolition
- ☐ Reconstruction
- ☐ Annual Permit

Solar parallel

IIb. SUBCODES (Check all that apply)

FOR OFFICE USE ONLY (Optional)

	Est. Cost	Plans Rec'd by	Date Rec'd	Rejection Date	Approval Date	Re-viewer	Resubmission Dates Approval	Resubmission Dates Rejection	Re-viewer
☒ Building	2934	CW	2/17/17		3-7-17	JGR			
☒ Electrical	11,739				3-2-17	MW			
☐ Plumbing									
☐ Fire Protection									
☐ Elevator		Eng Exempt			2/24/17 ECC				
TOTAL COST									

VII. DESCRIPTION OF BUILDING USE

A. RESIDENTIAL *(primary use)*
1. State Specific Use: Single Family Home
2. Use Group, Proposed: _____
3. Change in Use Group, Indicate Present:
4. No. of dwelling units: *Total Units* *Income-restricted*
   Gained, Sale ____ ____
   Gained, Rental ____ ____
   Lost, Sale ____ ____
   Lost, Rental ____ ____

B. NON-RESIDENTIAL *(primary use)*
1. State Specific Use:
2. Use Group, Proposed: _____
3. Change in Use Group, Indicate Present:

C. MIXED USE -List secondary use(s): _____

D. Construct. Classification: Present _____ Proposed _____

III. PLAN REVIEW (optional)

DO YOU WANT:
1. ☐ Partial Releases
2. ☐ Prototype Processing

IV. DOES OR WILL YOUR BUILDING CONTAIN ANY OF THE FOLLOWING?

1. ☐ Elevators/Escalators/Lifts/ Dumbwaiters/Moving Walks
2. ☐ High Pressure Boilers
3. ☐ Pressure Vessels
4. ☐ Refrigeration Systems
5. ☐ Cross-Connections/Backflow Preventers
6. ☐ Hazardous Uses/Places of Assembly
7. ☐ Sprinklers/Standpipes
8. ☐ Smoke Control Systems in Open Wells
9. ☐ Underground Storage Tanks
10. ☐ Swimming Pools, Spas and Hot Tubs
11. ☐ LPGas Tanks
12. ☐ Fire Alarm

CERTIFICATION IN LIEU OF OATH

I. OWNER SECTION (to be completed if the applicant is the owner in fee)

I hereby certify that I am the owner in fee of the property listed on Page 1.

Mark the following applicable boxes:

A. ( ) I further certify that a new home (private residence) will be constructed on this property for my own use and occupancy. This dwelling is to be occupied by myself and is not to be used for any purpose other than single family residential use. I attest that all construction, plumbing, or electrical work will be done, in whole or in part, by me or by subcontractors under my supervision, in accordance with all applicable laws; and, I further acknowledge that said new home is not covered under the New Home Warranty and Builders Registration Act (N.J.S.A. 46:3B-1 et seq.) and that such fact shall be disclosed to any person purchasing this property within ten years of the date of issuance of a certificate of occupancy.

I UNDERSTAND THAT IN MARKING BOX A, I ACKNOWLEDGE THAT I AM ASSUMING RESPONSIBILITY FOR THE WORK DONE ON SAID PROPERTY, THE CONDITION OF THE PROPERTY PRIOR TO, DURING, AND AFTER ANY WORK PERFORMED, AND FOR THE PERFORMANCE OF THE SUBCONTRACTORS I HIRE, EMPLOY, OR OTHERWISE CONTRACT OR WITH WHOM I MAKE AGREEMENTS TO PERFORM WORK. I AM VOLUNTARILY AND KNOWINGLY ASSUMING THIS RESPONSIBILITY.

B. ( ) I further certify the following as required by the New Jersey Uniform Construction Code, N.J.A.C. 5:23-2.15(f)1.ix:

I personally prepared the plans submitted for: 1) the new home referred to in A.; or, 2) an addition, alteration, renovation, or repair to an existing single family residence owned and occupied by myself and located on the property listed on Page 1; or, 3) a new structure that will be physically separate from, but that will be deemed part of, an existing single family residence that is owned and occupied by myself and located on the property listed on Page 1.

C. ( ) I further certify that I will perform or supervise the following work:
C.1. ( ) Building C.2. ( ) Fire Protection

I further certify that I will perform the following work:
C.3. ( ) Electrical C.4. ( ) Plumbing

D. ( ) I agree to advise all contractors on this project that they are required to be registered with the New Jersey Division of Taxation and to comply with all New Jersey tax laws.

I further certify the following as required by the Uniform Construction Code, N.J.A.C. 5:23-2.15(a)5: All required State, county, and local prior approvals have been given, including such certification as the construction official may require.

I understand that if any of the above statements are willfully false, I am subject to punishment.

Signature _____ Date _____

II. AGENT SECTION (to be completed if the applicant is not the owner in fee)

I hereby certify the following as required by the Uniform Construction Code, N.J.A.C. 5:23-2.15(d): the proposed work is authorized by the owner in fee; and I have been authorized by the owner in fee to make this application as his agent.

I further certify the following as required by the Uniform Construction Code, N.J.A.C. 5:23-2.15(a)5: All required State, county, and local prior approvals have been given, including such certification as the construction official may require.

I agree to advise all contractors on this project that they are required to be registered with the New Jersey Division of Taxation and to comply with all New Jersey tax laws.

I understand that if any of the above statements are willfully false, I am subject to punishment.

(X) Check if contractor.

Agent Name Vivint Solar

Address 687 Prospect St Unit 470-480

Lakewood, NJ 08701

Telephone (732) 831-7712

Signature _____

III. ( ) LEAD HAZARD ABATEMENT: Include Homeowner or Building Owner Affidavit as per N.J.A.C. 5:17.

2/23/17 - SENT TO comm - SGW
3/8/17 - Emailed. R.F.P. (CW)

NJ-4 JERSEY

OFFICE DATE RECEIVED: _____

VIII. PRIOR APPROVALS CHECKLIST (office use only)	LOCAL APPROVAL		COUNTY APPROVAL		REGIONAL APPROVAL		STATE APPROVAL		COMMENTS
	Prelimin. Initial	Final Date	Prelimin. Initial	Final Date	Prelimin. Initial	Final Date	Prelimin. Initial	Final Date	
☐ Zoning Officer									
☐ Planning Board									
☐ Zoning Board									
☐ Sewer Authority									
☐ Water Authority									
☐ Police Department									
☐ Health Department									
☐ Soil Conservation									
☐ N.J. Department of Community Affairs									
☐ N.J. Department of Transportation									
☐ N.J. Department of Environmental Protection									
☐ Utility Dig No.									
☐									
☐									

IX. SUBCODES AND SPECIAL REGULATIONS APPLICABLE (office use only—optional)

	Name of Code & Edition		Name of Code & Edition		
Building		Energy		Other	
Electrical		Barrier Free			
Plumbing		Flood Hazard			
Fire Protection		As Built Elevation Cert.			
Mechanical		Other			

X. CERTIFICATES ISSUED (office use only)

		DATE ISSUED	DATE EXPIRED	DATE REISSUED	DATE EXPIRED
☐ Temporary Certificate of Occupancy	No.				
☐ Temporary Certificate of Compliance	No.				
☐ Continued Certificate of Occupancy	No.				
☐ Certificate of Compliance	No.				
☐ Certificate of Occupancy	No.				
☐ Certificate of Approval	No.				

Brick Township
401 Chambersbridge Rd
Brick, NJ 08723

Date Issued	4/20/2017
Control Number	C-17-000680
Permit Number	17-0785
Permit Issue Date	3/15/2017
Certificate Number	17-0785

Certificate

Construction Code Division

(Certificate of Approval)

Identification

Work Site Location: 1672 FORGE POND RD. Brick Township, NJ Block: 838 Lot: 16 Qual:

Owner in Fee: FILI, JOSEPH

Owner Address: 1672 FORGE POND RD BRICK NJ 08724

Telephone: [redacted]

Contractor VIVINT SOLAR DEVELOPER, LLC

Address 687 PROSPECT ST UNIT 480 LAKEWOOD NJ 08701

Telephone: (848) 221-2777 Fax: (732) 597-7497

License Number or Builders Registration Number: 34EI01108500 34EB01809700 13VH06589300 Federal Emp. Number: 800756438

Home Warranty Number:

Type of Warranty Plan: ☐ State ☐ Private

Use Group: R-5 Construction Classification:

Maximum Live Load: 0 Maximum Occupancy Load: 0

Description of Work/Use: SOLAR PANELS ...INSTALL 6.67 kw ROOF MOUNT PHOTOVOLTAIC SOLAR SYSTEM

Certificate Comments:

☐ **Certificate of Occupancy**
This serves notice that said building or structure has been constructed in accordance with the New Jersey Uniform Construction Code and is approved for occupancy.

☑ **Certificate of Approval**
This serves notice that the work completed has been constructed or installed in accordance with the New Jersey Uniform Construction Code and is approved. If the permit was issued for minor work, this certificate was based upon what was visible at the time of inspection.

☐ **Certificate of Continued Occupancy**
This serves notice that based on a general inspection of the visible parts of the building there are no imminent hazards and the building is approved for continued occupancy.

☐ **Temporary Certificate of Compliance**
The following conditions must be met no later than
or the owner will be subject to fine or order to vacate:
This certificate has an expiration date of:
Conditions to be met:

☐ **Certificate of Clearance - Lead Abatement 5:17**
This serves notice that based on written certification, lead abatement was performed as per NJAC5:17 to the following extent.

☐ Total removal of lead-based paint hazards in scope of work
☐ Partial or limited time period (years); see file

☐ **Certificate of Clearance - Asbestos Abatement**
This serves notice that based on written certification, asbestos abatement was performed to the following extent.

☐ Total removal of asbestos hazards in scope of work
☐ Partial or limited time period (years); see file

☐ **Certificate of Compliance**
This serves notice that said potentially hazardous equipment has been installed and/or maintained in accordance with the New Jersey Uniform Construction Code and is approved for use until

☐ **Temporary Certificate of Occupancy**
The following conditions must be met no later than:
or the owner will be subject to fine or order to vacate:
This certificate has an expiration date of:
Conditions to be met:

David F Newman Jr

Construction Official

Fee: $0.00
Check Number:
Collected By:

ELECTRICAL SUBCODE
TECHNICAL SECTION

Date Received 3/15/17
Control #
Date Issued
Permit # 17-0785

A. IDENTIFICATION—APPLICANT: COMPLETE ALL APPLICABLE INFORMATION. WHEN CHANGING CONTRACTORS, NOTIFY THIS OFFICE. CALL UTILITY DIG NO: 1-800-272-1000.

Block 838 Lot 16 Qualification Code

Work Site Location 1672 FORGE POND RD
BRICK, NJ 08724

Owner in Fee: [illegible]

Te[redacted] e-mail

Address same as above
street municipality zip code

Contractor: Vivint Solar Developer LLC Tel. (732) 831-7712

Address 687 Prospect Street e-mail camille.harvey-reyes@vivintsolar.com
Lakewood, NJ 08701

Contractor License No. 34EI01809700 Exp. Date 3-31-18

Home Improvement Contractor Registration No. or Exemption Reason

Federal Emp. ID No. 80-0756438 FAX: (732) 597-7497

B. ELECTRICAL CHARACTERISTICS

Use Group Present Proposed

[ ] Pole/Pad # [ ] Temporary [ ] Other

Building Occupied as Single Family Utility Co. JCP&L

Est. Cost of Elec. Work $ 11,739

C. CERTIFICATION IN LIEU OF OATH

I hereby certify that I am the (agent of) owner of record and am authorized to make this application and perform the work listed on this application.

Applicant sign/Contractor sign and seal here: [signature]

Print name here: Matthew K. Hofherr

[✓] Licensed Elec. Contractor [ ] Certif'd Landscape Irrigation Cont'r. [ ] Exempt Applicant

D. TECHNICAL SITE DATA

DESCRIPTION OF WORK:
Ins of A 6.67 KW ARRAY PV SYSTEM

QTY.	SIZE	ITEMS	FEE (Office Use Only)
		Lighting Fixtures	
1		Receptacles END SBOX	
		Switches	
		Detectors	
		Light Poles	
		Motors—Fract. HP	
		Emergency & Exit Lights	
		Communications Points	
		Alarm Devices/F.A.C. Panel	
23		MICROINVERTERS	
23		TOTAL NUMBERS	$
		Pool Permit/with UW Lights	
		Storable Pool/Spa/Hot Tub	
		KW Elec. Range/Receptacle	
		KW Oven/Surface Unit	
		KW Elec. Water Heater	
		KW Elec. Dryer/Receptacle	
		KW Dishwasher	
		HP Garbage Disposal	
		KW Central A/C Unit	
		HP/KW Space Heater/Air Handler	
		KW Baseboard Heat	
		HP Motors 1/+ HP	
		KW Transformer/Generator	
		AMP Service	
1	60	AMP Subpanels	
		AMP Motor Control Center	
		KW Elec. Sign/Outline Light	
1	~~60~~ 30	Disconnect	

6.67 KW PV

Administrative Surcharge	$
Minimum Fee	$
State Permit Surcharge Fee	$
TOTAL FEE	$

JOB SUMMARY (Office Use Only)

PLAN REVIEW

[ ] No Plans Required

[ ] Partial -Underslab Utilities Approved

Date: Approved by:

[✓] Electric Plans Approved

Date: 3-2-17 Approved by: [illegible]

Joint Plan Review Required:
[ ] Bldg. [ ] Plumb. [ ] Fire. [ ] Elev.

SUBCODE APPROVAL for PERMIT

Date:

Approved by:

SUBCODE APPROVAL for CERTIFICATE

[ ] CO [ ] CCO [✓] CA

Date: 3/31/17

Approved by: [signature]

(ca) 4-4-17 [illegible]

INSPECTIONS Type:	Failure	Failure	Approval	Initial
	Dates (Month/Day)			
Rough				
Barrier-Free				
Trench				
Temp. Serv.				
Constr. Serv.				
TCO				
Other				
Service				
Final	3/28/17		4-17-17	[illegible]
Barrier-Free				

Temp. Cut-in-Card Date Issued

Final Cut-in-Card Date Issued

Annual Pool Inspection

Date of Grounding and Bonding Certification

U.C.C. F120 (rev. 11/09)
Internet version

Applicant: When submitting this form to your Local Construction Code Enforcement Office, please provide one original plus three photocopies.

NJ-4 JERSEY SHORE

3-28-17 SOLAR NOT STARTED.

BUILDING SUBCODE
TECHNICAL SECTION

Date Received Control # 3/15/17

Date Issued Permit # 17-0785

A. IDENTIFICATION—APPLICANT: COMPLETE ALL APPLICABLE INFORMATION. WHEN CHANGING CONTRACTORS, NOTIFY THIS OFFICE. CALL UTILITY DIG NO: 1-800-272-1000.

Block 838 Lot 16 Qualification Code

Work Site Location 1672 FORGE POND RD
BRICK, NJ 08724

Owner in Fee: JOSEPH FILI

Tel [redacted] e-mail N/A

Address Same as above
street municipality zip code

Contractor: Vivint Solar Developer, LLC Tel. 732-831-7712

Address 687 Prospect St Unit 470-480 e-mail camille.harvey-reyes@vivintsolar.com

Lakewood, NJ 08701

Contractor License No. or Builder Registration No. 13VH06589300 Exp. Date 03-31-17

Home Improvement Contractor Registration No. or Exemption Reason (if applicable):

Federal Emp. ID No. 80-0756438 FAX:

JOB SUMMARY (Office Use Only)

PLAN REVIEW	Date	Initial
[ ] No Plans Required		
[✓] All	3-7-17	
[ ] Footings/Foundations		
[ ] Structural/Framework		
[ ] Exterior		
[ ] Interior		

Joint Plan Review Required:
[ ] Elec. [ ] Plumb. [ ] Fire [ ] Elevator

SUBCODE APPROVAL for PERMIT
Date: 03/08/17
Approved by: KAK

SUBCODE APPROVAL for CERTIFICATE
[ ] CO [ ] CCO [✓] CA
Date: 04/17/17
Approved by: KAK

INSPECTIONS Type:	Dates (Month/Day) Failure	Failure	Approval	Initial
Footing				
Footing Bonding				
Foundation				
Slab				
Frame				
Truss Sys./Bracing				
Barrier-Free				
Insulation				
Finishes -Base Layer				
Finishes -Final				
Energy				
Mechanical				
TCO				
Other				
Final	N.R. 03/28/17		4-17-17	
Barrier-Free				

B. BUILDING CHARACTERISTICS

Use Group Present _____ Proposed _____

No. of Stories _____

Height of Structure _____ ft.

Area — Largest Floor _____ sq. ft.

New Bldg. Area/All Floors _____ sq. ft.

Volume of New Structure _____ cu. ft.

Max. Live Load _____

Max. Occupancy Load _____

Constr. Class Present _____ Proposed _____

If Industrialized Building:
State Approved _____ HUD _____

Est. Cost of Bldg. Work:
1. New Bldg. $ _____
2. Rehabilitation $ _____
3. Total (1+ 2) $ 2934

U.C.C. F110 (rev. 11/09)
Internet version

C. CERTIFICATION IN LIEU OF OATH

I hereby certify that I am the (agent of) owner of record and am authorized to make this application.

Sign here: [signature]

Print name here: Steven Murphy

D. TECHNICAL SITE DATA

DESCRIPTION OF WORK

-Support for a photovoltaic (PV) system (solar system)

TYPE OF WORK:
[ ] New Building
[ ] Addition
[ ] Rehabilitation
[ ] Roofing
[ ] Siding
[ ] Fence _____ Height (exceeds 6')
[ ] Sign _____ Sq. Ft.
[ ] Pool
[ ] Retaining Wall _____ Sq. Ft.
[ ] Asbestos Abatement Subchapter 8
[ ] Lead Haz. Abatement NJAC 5:17
[ ] Radon Remediation
[X] Other PV Support
[ ] Demolition

FEE (Office Use Only)
$ _____

Administrative Surcharge $ _____
Minimum Fee $ _____
State Permit Surcharge Fee $ _____
TOTAL FEE $ _____

NJ-4 JERSEY SHORE

Applicant: When submitting this form to your Local Construction Code Enforcement Office, please provide one original plus three photocopies.

03/28/17. FINAL INSP'N Rej

Not Ready

Job not even started yet.

CONSTRUCTION PERMIT

Date Issued 3/15/17
Control # C-17-000680
Permit # 17-0785

IDENTIFICATION Block: 838 Lot: 16 Qualifier
Work Site Location: 1672 FORGE POND RD. Brick Township, NJ
Contractor VIVINT SOLAR DEVELOPER, LLC
Address 687 PROSPECT ST UNIT 480 LAKEWOOD, NJ 08701
Owner in Fee FILI, JOSEPH
1672 FORGE POND RD BRICK NJ 08724
Telephone: (848) 221-2777
Telephone: [redacted]
Lic. No. or Bldrs. Reg. No. 13VH06589300 34EB01809700
Federal Employee. No. 800756436 801756436 13VH06589300

Is hereby granted permission to perform the following work:

- [x] BUILDING
- [ ] PLUMBING
- [ ] LEAD HAZARD ABATEMENT
- [x] ELECTRICAL
- [ ] FIRE PROTECTION
- [ ] DEMOLITION
- [ ] ELEVATOR DEVICES
- [ ] ASBESTOS ABATEMENT (Subchapter 8 only)
- [ ] OTHER

DESCRIPTION OF WORK:
SOLAR PANELS ...INSTALL 6.67 kw ROOF MOUNT PHOTOVOLTAIC SOLAR SYSTEM

PAYMENTS (Office Use Only)

Building	$150
Electrical	$425
Plumbing	$0
Fire Protection	$0
Elevator Devices	$0
Other	$0.00
DCA Training Fee	$28
CO Fee	
Other	$0
Total	$603
Check No.	4614
Cash	$0
Credit	$0
Collected By	

+75
678.

Note: If construction does not commence within one (1) year of date of issuance, or if construction ceases for a period of six (6) months, this permit is void.
Estimated Cost of Work $14,673

Construction Official Date 3/8/17

U.C.C. F170
equiv (rev 1/04)

1 WHITE - INSPECTOR 2 CANARY - OFFICE 3 PINK - TAX ASSESSOR 4 GOLD - APPLICANT

03/15/17 3:32PM 0015588 7915
#0795 BUILDING $150.00
ELECTRIC $425.00
DCA $28.00
CHECK $75.00
$678.00

REQUIRED INSPECTIONS

Construction work must be inspected in accordance with the State Uniform Construction Code Regulations N.J.A.C. 5:23-2.18. This agency will carry out such periodic inspections during the progress of work as are necessary to insure that the work installed conforms with the requirements of the Uniform Construction Code.

The owner or other responsible person in charge of work must notify this agency when work is ready for any required inspections specified below. Requests for inspections must be made at least 24 hours prior to the time the inspection is desired. Inspections will be performed within three business days of the time for which they are requested. The work must not proceed in a manner which will preclude the inspection until it has been made and approval granted.

- [x] Required inspections for all subcodes for one- and two-family dwellings are as follows:
  1. The bottom of footing trenches before placement of footings, except that in cases of pile foundations, inspections shall be made in accordance with the requirements of the building subcode.
  2. Foundations and all walls up to grade level prior to back filling.
  3. All structural framing, connections, wall and roof sheathing and insulation; electrical rough wiring, panel and service installation; rough plumbing. The framing inspection shall take place after the rough electrical and plumbing inspections and after the installation of the heating, ventilation and /or air conditioning duct system. The insulation inspection shall be performed after all other subcode rough inspections and prior to the installation of any interior finish material.
  4. Installation of all finished materials, sealings of exterior joints, plumbing piping, trim and fixtures; electrical wiring, devices and fixtures; mechanical systems equipment.

  Additional required inspections for all subcodes of construction, for other than one- and two-family dwellings, are fire suppression systems, heat producing devices and Barrier Free subcode accessibility, if applicable.

- [ ] Required special inspections. The applicant by accepting the permit will be deemed to have consented to these requirements:

- [x] A final inspection is required for each applicable subcode area before a final Certificate of Occupancy or Approval may be issued. The final inspections include the installation of all interior and exterior finish materials, sealing of exterior joints, mechanical system and other required equipment; electrical wiring, devices and fixtures; plumbing pipes, trim and fixtures; tests required by any provision of the adopted subcodes, Barrier Free accessibility, if applicable; and verification of compliance with NJAC 5:23-3.5, "Posting structures".

- [x] A complete copy of released plans must be kept on the job site.

If you do not understand any of this information, please ask.

RECEIVING CLERK (CW)
DATE REC'D 2/17/17

ZONING PERMIT APPLICATION

PERMIT # ZP-17-00325
DATE ISSUED 3/15/17

BLOCK: 838 LOT: 16 QUALIFIER: — SITE ADDRESS: 1672 FORGE POND RD

IDENTIFICATION:

1. NAME OF OWNER IN FEE: JOSEPH FILI
   COMPLETE ADDRESS: 1672 FORGE POND RD
   BRICK, NJ 08724
   PHONE [redacted] EMAIL:

2. NAME OF APPLICANT: VIVINT SOLAR
   APPLICANT ADDRESS: 685 PROSPECT ST
   LAKEWOOD, NJ 08701
   PHONE # 732 851 7712 EMAIL:

3. RESPONSIBLE PERSON FOR WORK: VIVINT SOLAR
   PHONE# SAA FAX# 732 897 7497

4. SIGNATURE OF APPLICANT:

FOR OFFICE USE ONLY

FEE SUMMARY:

APPLICATION FEE: $ 75-
OTHER: $
TOTAL: $ 75-

REQUIRED BY APPLICANT

RESIDENTIAL: n/a
COMMERCIAL: n/a
EXISTING USE: SINGLE FAMILY
PROPOSED USE: SAME

BOARD APPROVAL: ___ PB ___ ZB
RESOLUTION#:
APPROVAL DATE:

PROJECT DESCRIPTION: (PLEASE CHECK APPLICABLE WORK & DESCRIBE)
*NEW BUILDING: ___ *ADDITION ___ *ALTERATION ___ *PORCH ___ *DECK ___

POOL: ABOVE GROUND ___ IN GROUND ___ FENCE: HEIGHT ___ TYPE ___ MATERIAL ___

HEIGHT: ___ (*IF APPLICABLE)

OTHER SOLAR

DESCRIPTION: INSTALLATION OF ROOF MOUNTED SOLAR PANELS

ZONING REVIEW:
DATE REVIEWED: 2-23-17 DATE DENIED: ___ DATE APPROVED: 2-23-17 INTLS:

(SEE BACK PAGE)

TOWNSHIP OF BRICK ZONING CHECKLIST

1) **Four (4) copies of plot plan containing:**

- All existing and proposed structures
- All dimensions of the lot and structures
- All setbacks from the structures to the property lines
- All adjacent streets and waterways
- If applicable, include a copy of the Zoning Board of Adjustment Resolution, the date that the map was signed, and/or the date that the subdivision map was filed with the Ocean County Clerk, along with the file map and number.

2) **Two copies of the plans with dimensions and heights noted:**

- Floor plans and elevations
- Signed site plans
- Property map
- Survey map

Choose which is applicable for submission

3) **Plot plans and building plans must match for complete review**

NOTE: NO PARTIAL, TAPED, FAXED, REDUCED OR ENLARGED COPIES CAN BE ACCEPTED

01/2010

245 Attachment 5

Township of Brick

SCHEDULE OF AREA, YARD AND BUILDING REQUIREMENTS
Township of Brick
Ocean County, New Jersey

[Amended 6-26-1979 by Ord. No. 354-2B-79; 4-22-1980 by Ord. No. 354-2H-80; 10-14-1980 by Ord. No. 354-2N-80; 9-23-1980 by Ord. No. 354-1B-80; 8-25-83 by Ord. No. 354-2SS-83; 11-5-1984 by Ord. No. 354-2-AAA-84; 11-5-1984 by Ord. No. 354-2CCC-84; 6-24-1986 by Ord. No. 354-2WWW-86; 9-13-1988 by Ord. No. 354-2TTTT-88; 9-27-1988 by Ord. No. 354-2XXXX-88; 9-12-2000 by Ord. No. 354-2EE-00; 5-9-2000 by Ord. No. 354-2Z-00; 3-26-2002 by Ord. No. 354-2C-02; 11-26-2002 by Ord. No. 354-2L-02; 3-25-2003 by Ord. No. 354-2D-03; 6-13-2006 by Ord. No. 19-06]

Zone	Minimum Lot Size						Minimum Required Yard Depth						Maximum Lot Coverage by Building	Maximum Building Height				Minimum Floor/ Building Area (square feet) 2 stories/1 story	Maximum Allowable Impervious Coverage
	Interior Lots			Corner Lots			Principal Building				Accessory Building								
	Area (square feet)	Width (feet)	Depth (feet)	Area (square feet)	Width (feet)	Depth (feet)	Front Yard (feet)	Side Yard, Each (feet)	Both Sides Combined (feet)	Rear Yard (feet)	Side Yard (feet)	Rear Yard[3] (feet)		Stories	Eaves (feet)	Feet	Ridge (feet)		
R-R	40,000	150	150	40,000	150	150	50	25		50	25	25	25%	–	25			–	
RR-2	See § 245-90.																		
RR-3	See § 245-103.																		
R-20	20,000	100	125	25,000	100	125	40	15	–	40	10	10	25%	–	25	35	38.5	–	
R-15	15,000	100	115	17,250	100	115	35	12	–	35	10	10	25%	–	25	35	38.5	–	
R-10	10,000	90	100	10,500	100	100	30	6	20	20	5	5	30%	–	25	35	38.5	–	
R-7.5	7,500	75	90	9,000	75	90	25	6	15	15	5	5	30%	–	25	35	38.5	–	
R-5	5,000	50	75	6,000	50	75	20	5	12	15	5	5	35%	–	25	35	38.5	–	
O-P	15,000	100	150	15,000	100	150	50	10	–	50	20	50	35%[2]	2	–	35	38.5	1,500	70%
B-1	10,000	100	90	12,500	100	125	30	10	–	20	10	20	30%[2]	2	–	35	38.5	1,000	60%
B-2	20,000	125	125	20,000	125	125	50	10	–	50	10	50	30%[2]	2	–	35	38.5	2,000	65%
B-3	2 acres	200	200	2 acres	200	200	75	30	–	50	20	50	25%[2]	–	–	35	38.5	2,000	65%
B-4	5 acres	300	300	–	–	–	100	50(150[1])	–	100(150[1])	20	50	25%	3	–	35	38.5	30,000	70%
M-1	5 acres	300	300	5 acres	300	300	100	50	–	150	75	150	30%[2]	–	–	35	38.5	5,000	65%
R-M	25 acres	350	200	–	–	–	50	50	–	30	30	30	20%	–	25	35	38.5	–	65%
O-P-T	40,000	150	150	40,000	150	150	50	20	–	50	20	50	25%[2]	2	–	35	38.5	2,000	50%
H-S	See § 245-261.													–	–	–	–		70%

NOTES:

1. If adjacent to residential zone or use.
2. The maximum lot coverage shall refer only to that percentage of an affected lot which is suitable for building.
3. For rear yard setback requirements for accessory buildings on waterfront property, see § 245-10D.

FOR REFERENCE ONLY

OFFICE USE ONLY

RECEIVED
FEB 23 2017
ZONING

ZONING REVIEW:

DATE REVIEWED: 2/23/17 DATE DENIED: — DATE APPROVED: 2/23/17 INTLS: SGO

DATE:	COMMENTS:	INITIALS:
2/23/17	SENT TO Comm	SGO

Brick Township
401 Chambers Bridge Rd.

Brick, NJ 08723
(732) 262-1336

Date Issued: 3/15/17
Application Number: ZA-17-00206
Application Date: 02/23/2017
Project Number:
Permit Number: ZP-17-00325
Fee: $75.00

Zoning Permit

Worksite Location: **1672 FORGE POND RD.**
Brick Township, NJ 08724

Block: **838**
Lot: **16**
Qualifier:
Zone: **R-10**

Owner: **FILI, JOSEPH**
Address: **1672 FORGE POND RD**
BRICK, NJ 08724

Applicant: **VIVINT SOLAR DEVELOPER, LLC**
Address: **687 PROSPECT ST**
UNIT 480
LAKEWOOD , NJ 08701

Application Approved Date: 02/23/2017

This Certifies that an application for the issuance of a Zoning Permit has been examined.

Use is: Single-Family Residential
Nonconforming Use is:

Work Description:
Solar Energy System - 23-290W Trina Solar, 5.200kW ENPHASE micro-inverters, mounted on the roof of the house.

Additional Zoning Permit is required for additional work.

Upon review it was determined that the Zoning Permit:

- ☑ Permitted by Ordinance
- ☐ Permitted by Variance approved on:
- ☐ Valid Nonconforming Use is established by
  - ☐ Zoning Board of Adjustment
  - ☐ Zoning Officer

Christopher J. Romano, Assistant Zoning Officer — 02/23/2017 Date

Sean Kinnevy, Zoning Officer — 2/23/17 **Date**

Zoning Review
Approval
By: [illegible]
Date: 2-23-17

PV SYSTEM SIZE:
6.67 kW DC

KEY

(23) Trina TSM-290DD05A(II) MODULES WITH AN Enphase S230-60-LL-2-US MICRO-INVERTER MOUNTED ON THE BACK OF EACH MODULE

75' OF 1" PVC CONDUIT FROM JUNCTION BOX TO ELECTRICAL PANEL

PV INTERCONNECTION POINT, LOCKABLE DISCONNECT SWITCH, ANSI METER LOCATION, & UTILITY METER LOCATION

JUNCTION BOX ATTACHED TO ARRAY USING ECO HARDWARE TO KEEP JUNCTION BOX OFF ROOF

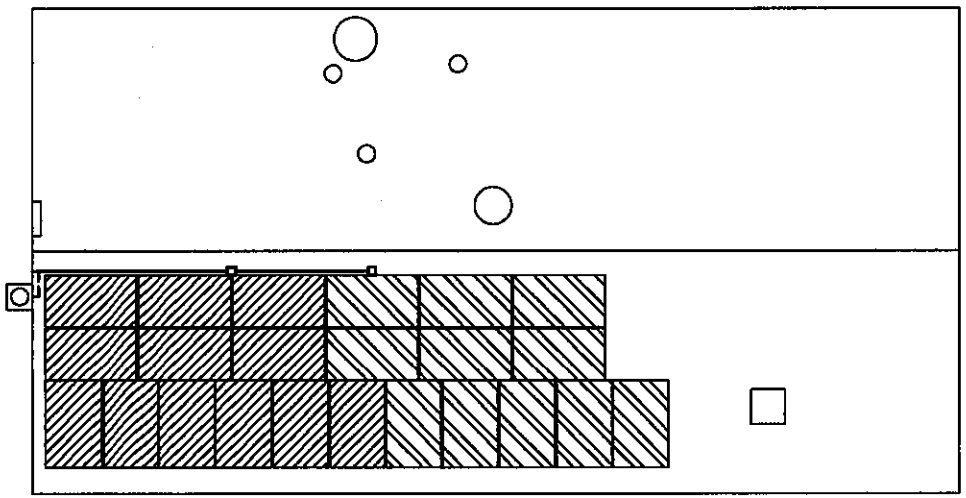

1672 FORGE POND RD, BRICK NJ 08724

PV SYSTEM SITE PLAN

SCALE: 3/32" = 1'-0"

Plans comply with the requirements of the 2015 IRC

Fili Residence
1672 FORGE POND RD
BRICK, NJ 08724
UTILITY ACCOUNT NUMBER: 100 084 562 071

vivint.solar

Last Modified: 2/6/2017

INSTALLER: VIVINT SOLAR
INSTALLER NUMBER: 1.877.404.4129
NJ LICENSE: 13VH06589300
DRAWN BY: RBR
S- 5421420

SHEET NAME: SITE PLAN

SHEET NUMBER: PV 1.0

KEY

- PLUMBING VENTS (SIZE VARIES)
- ROOF VENTS (SIZE VARIES)
- SATELLITE DISH
- CHIMNEY
- SKYLIGHT
- METER #S93942505
- CIRCUIT #1: 12 MODULES
- CIRCUIT #2: 11 MODULES

DESIGNED SECTIONS ARE ON COMP. SHINGLE

1	Roof Section 1 Roof Azimuth: 227 Roof Tilt: 22

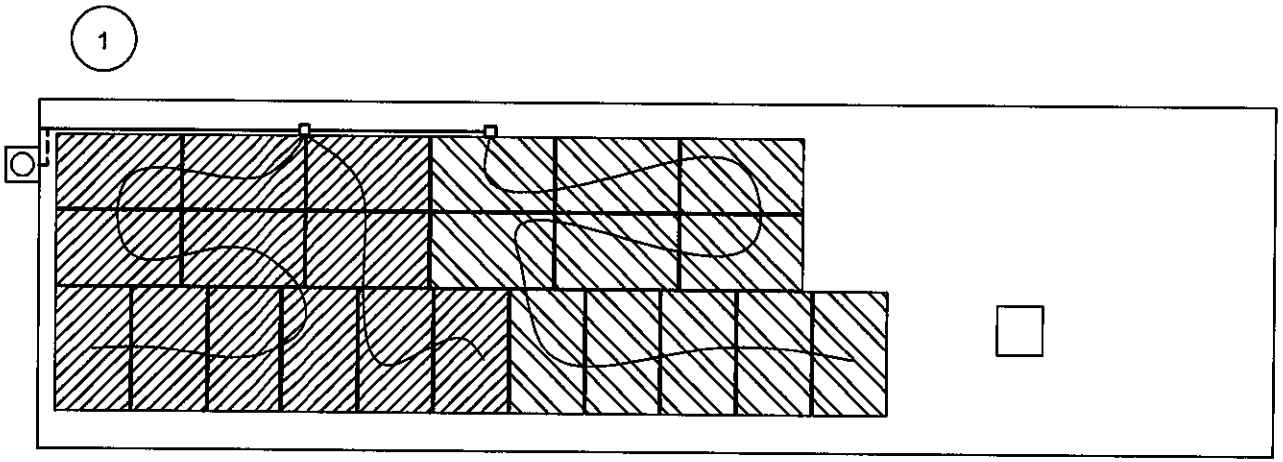

PV SYSTEM ROOF PLAN

SCALE: 1/8" = 1'-0"

Plans comply with the requirements of the 2015 IRC

Fili Residence
1672 FORGE POND RD
BRICK, NJ 08724
UTILITY ACCOUNT NUMBER: 100 084 592 071

vivint.solar

Last Modified: 2/6/2017

INSTALLER: VIVINT SOLAR
INSTALLER NUMBER: 1.877.404.4129
NJ LICENSE: 13VH06589300
DRAWN BY: RBR | S-5421420

SHEET NAME: ROOF PLAN

SHEET NUMBER: PV 2.0

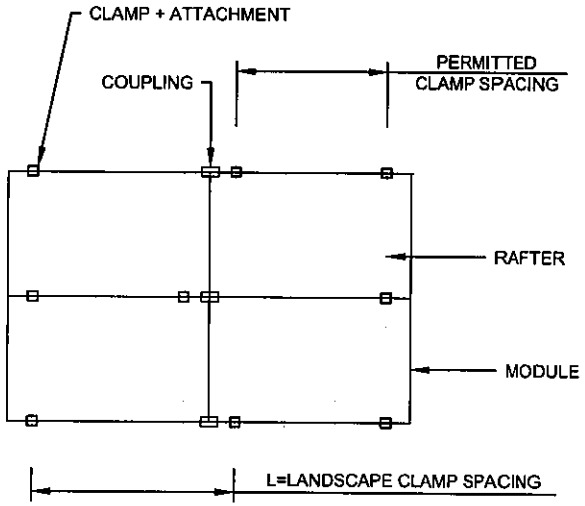

1 PV 3.0 MODULES IN PORTRAIT/LANDSPACE

NOT TO SCALE

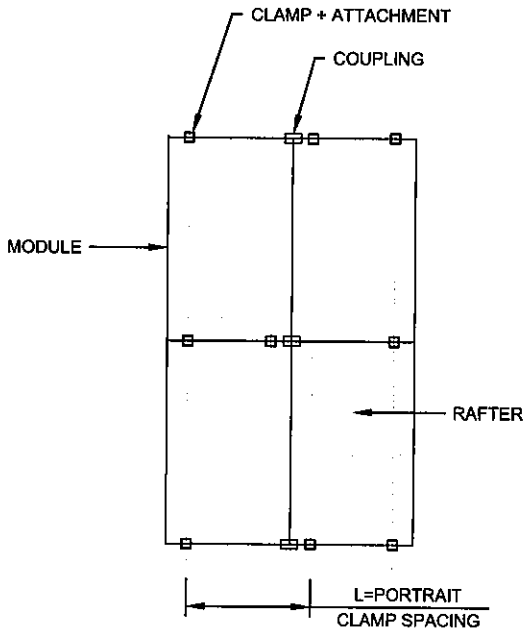

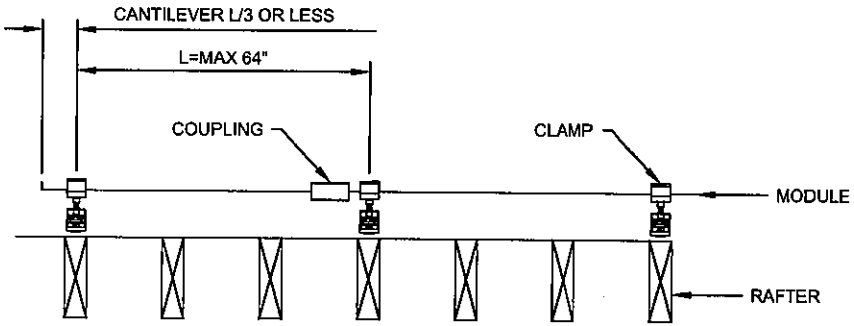

2 PV 3.0 PV SYSTEM MOUNTING DETAIL

NOT TO SCALE

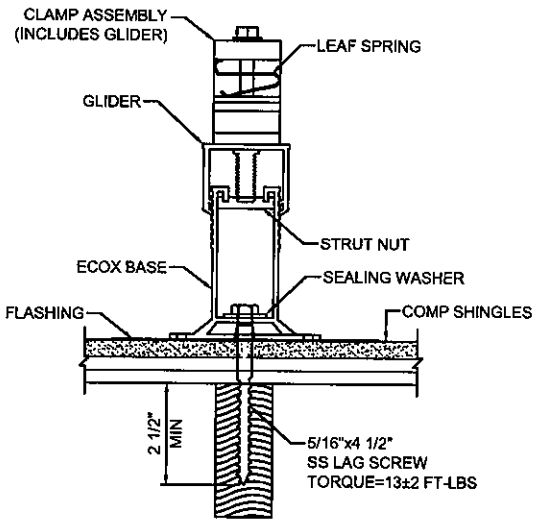

3 PV 3.0 ECOX MOUNT DETAIL

NOT TO SCALE

Fili Residence
1672 FORGE POND RD
BRICK, NJ 08724
UTILITY ACCOUNT NUMBER: 100 084 562 071

vivint.solar

Last Modified: 2/6/2017

INSTALLER: VIVINT SOLAR
INSTALLER NUMBER: 1.877.404.4129
NJ LICENSE: 13VH06589300
DRAWN BY: RBR
S- 5421420

SHEET NAME: MOUNT. DETAILS

SHEET NUMBER: PV 3.0

Photovoltaic System	
DC System Size	6670
AC System Size	5290
Module/Inverter Count	23

Conduit Conductor Schedule (ALL CONDUCTORS MUST BE COPPER)					
Tag #	Description	Wire Gauge	# of Conductors/Color	Conduit Type	Conduit Size
1	Enphase Engage Cable THWN-2	12 AWG	4(L1, L2, N, G)	N/A-Free Air	N/A-Free Air
1	Bare Copper Ground(EGC/GEC)	6 AWG	1 BARE	N/A-Free Air	N/A-Free Air
2	THWN - 2	10 AWG	6(2L1 2L2 2N) B/R/W	PVC	1"
2	THWN - 2 - Ground	8 AWG	1(GRN)	PVC	1"
3	THWN - 2	10 AWG	3(1L1 1L2 1N) B/R/W	PVC	1"
3	THWN - 2 - Ground	8 AWG	1(GRN)	PVC	1"
4	THWN - 2	10 AWG	3(1L1 1L2 1N) B/R/W	LFNC	1"
4	THWN - 2 - Ground	8 AWG	1(GRN)	LFNC	1"

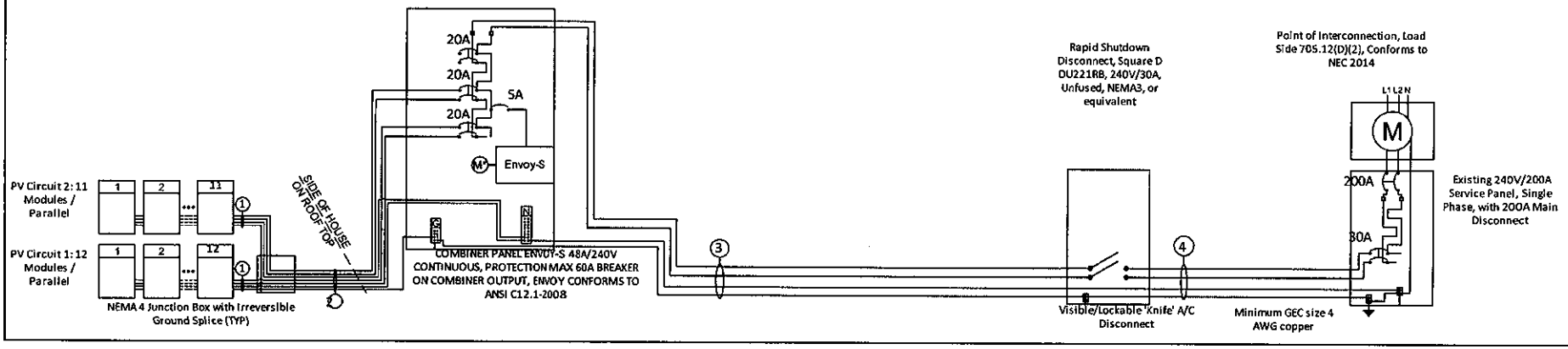

Joseph Fili Residence
1672 FORGE POND RD
BRICK, NJ 8724
Utility Account:100 084 562 071

vivint.solar

Created: 2/16/17

INSTALLER: VIVINT SOLAR
INSTALLER NUMBER: 1.877.404.4129
NJ LICENSE: 13VH06589300
5421420

SHEET NAME: 3-Line Drawing

SHEET NUMBER: E. 1

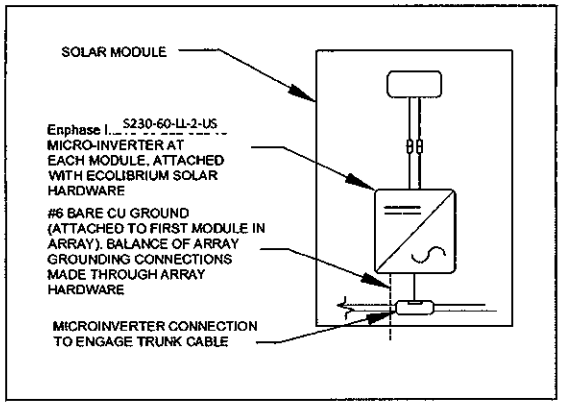

PV Module Rating @ STC		
Module Make/Model	Trina Solar TSM-290 DD05A.08(II)	
Max. Power-Point Current (Imp)	9.01	Amps
Max. Power-Point Voltage (Vmp)	32.2	Volts
Open-Circuit Voltage (Voc)	39.5	Volts
Short-Circuit Current (Isc)	9.5	Amps
Max. Series Fuse (OCPD)	15	Amps
Nom. Max. Power at STC (Pmax)	290	Watts
Max. System Voltage	1000V DC (IEC)(UL)	
Voc Temperature Coefficient	-0.29	%/C

AC Output Current According to NEC 690.8(B)(1)	21.16	Amps
Nominal AC Voltage	240	Volts
THIS PANEL IS FED BY MULTIPLE SOURCES (UTILITY AND SOLAR)		

Rooftop conductor ampacities designed in compliance with NEC 690.8, Tables 310.15(B)(2)(a), 310.15(B)(3)(a), 310.15(B)(3)(c), 310.15(B)(16), Chapter 9 Table 4, 5, & 9. Loacation specific temperature obtained from ASHRAE 2013 data tables.

ASHRAE 2013 -
Highest Monthly 2% D.B. Design Temp.: 33 °C
Lowest Min. Mean Extreme D.B.: -19.1 °C

Inverter Make/Model	S230-60-LL-2-US	
Max. Dc Volt Rating	48	Volts
Max. Power at 40 C	230	Watts
Nominal AC Voltage	240	Volts
Max. AC Current	0.92	Amps
Max. OCPD Rating	20	Amps
Max. Panels/Circuit	17	
Short Circuit Current	1.05	Amps

Conductor Calculations

- Wire gauge calculated from NEC code 310.15(B)(16) with ambient temperature calculations from NEC 310.15(2)(a).
For "On Roof" conductors we use the 90°C column ampacity, 0.5"-3.5" off-the-roof temperature adjustment from 310.15(B)(3)(c), and raceway fill adjustments from 310.15(B)(16).
For "Off Roof" conductors we use the 75°C column ampacity, or the 90°C column ampacity with the relevant ambient temperature and raceway fill adjustments, whichever is less.
The rating of the conductor after adjustments MUST be greater than, or equal to, the continuous duty uprated output current.
Calculation Example - Wire Rating (90°C) x Ambient Temperature Adjustment x Conduit Fill Adjustment >= Continuous Duty Output Current
(On Roof, Tag 2): 10 gauge wire rated for 40 A, 40 A x 0.76 x 0.8 (4 Conductors) = 24.32 A >= 13.8 A
(Off Roof, Tag 3): 10 gauge wire rated for 35 A, 35 A >= 26.45 A
(Off Roof, Tag 4): 10 gauge wire rated for 35 A, 35 A >= 26.45 A

OCPD Calculations

Breakers sized according to continuous duty output current. PV circuit nominal current based off # of modules per Circuit X (1.25(NEC code 210.19(A)(1)(a) X (.9 Max AC current per micro-inverter)
Circuit #1 = 12 modules, Output Current w/ continuous duty = 13.8 < 20A Breaker
Circuit #2 = 11 modules, Output Current w/ continuous duty = 12.65 < 20A Breaker
system output current w/ continuous duty = 26.45 < 30A (System OCPD)

Other Notes

- All ampacity calculations are made in compliance with NEC 220.5(B)

Joseph Fili Residence
1672 FORGE POND RD
BRICK, NJ 8724
Utility Account:100 084 562 071

vivint.solar

Created: 2/16/17

INSTALLER: VIVINT SOLAR
INSTALLER NUMBER: 1.877.404.4129
NJ LICENSE: 13VH06589300
5421420

SHEET NAME: Notes Page

SHEET NUMBER: E. 2

TOWNSHIP OF BRICK

OCEAN COUNTY, NEW JERSEY
401 CHAMBERS BRIDGE ROAD, BRICK, N.J. 08723

John G. Ducey, Mayor

Township Council:
Paul Mummolo - President
Marianna Pontoriero - Vice President
Lisa Crate
Heather deJong
Jim Fozman
Arthur Halloran
Andrea Zapcic

Division of Engineering

Elissa C. Commins, PE, PP, CME, CPWM, CFM
Township Engineer & Floodplain Manager
ecommins@twp.brick.nj.us

732-262-1040
Fax: 732-262-2941
www.twp.brick.nj.us

Date: 2/17/17

ENGINEERING
PLOT PLAN EXEMPT FORM
(ONLY IF NOT IN A FLOOD ZONE)

Block: 838 Lot: 16

Property Address: 1672 FORGE POND RD BRICK, NJ 08724

I, CAMILLE HARVEY-REYES of VIVINT SOLAR
(name) (address)

request to be exempt from the plot plan requirement for an addition, fence, shed, deck, pool, retaining wall, etc. as outlined in the Township Code, Chapter 245, Section 245-29.

Applicant's Signature

The following shall be submitted with this request:

1. Submit surveys locating existing dwelling and proposed addition. Dimensions of the addition should be included.

2. **Proof that the property is not located in a Flood Hazard Area.**

Note: Prior to approval a site inspection by the Engineering Department will be performed to verify that the proposed addition will not create a drainage problem.

FOR OFFICE USE ONLY

Approved on: _____ Signed: _____

Rejected on: _____ Signed: _____

Comments:

ELECTRICAL SUBCODE
TECHNICAL SECTION

Date Received 3/15/17
Control #
Date Issued
Permit # 17-0785

A. IDENTIFICATION—APPLICANT: COMPLETE ALL APPLICABLE INFORMATION. WHEN CHANGING CONTRACTORS, NOTIFY THIS OFFICE. CALL UTILITY DIG NO: 1-800-272-1000.

Block 838 Lot 16 Qualification Code

Work Site Location 1672 FORGE POND RD
BRICK NJ 08724

Owner in Fee: KEITH GILL

Tel. [redacted] e-mail

Address same as above
street municipality zip code

Contractor: Vivint Solar Developer LLC Tel. (732) 831-7712

Address 687 Prospect Street e-mail camille.harvey-reyes@vivintsolar.com
Lakewood, NJ 08701

Contractor License No. 34EI01809700 Exp. Date 3-31-18

Home Improvement Contractor Registration No. or Exemption Reason

Federal Emp. ID No. 80-0756438 FAX: (732) 597-7497

B. ELECTRICAL CHARACTERISTICS

Use Group Present Proposed

[ ] Pole/Pad # [ ] Temporary [ ] Other

Building Occupied as Single Family Utility Co. JCP&L

Est. Cost of Elec. Work $ 11,739

JOB SUMMARY (Office Use Only)

PLAN REVIEW

[ ] No Plans Required

[ ] Partial -Underslab Utilities Approved

Date: Approved by:

[X] Electric Plans Approved

Date: 3-2-17 Approved by: VM

Joint Plan Review Required:
[ ] Bldg. [ ] Plumb. [ ] Fire. [ ] Elev.

SUBCODE APPROVAL for PERMIT

Date:

Approved by:

SUBCODE APPROVAL for CERTIFICATE

[ ] CO [ ] CCO [✓] CA

Date: 3/9/17

Approved by:

INSPECTIONS Type:	Dates (Month/Day) Failure	Failure	Approval	Initial
Rough				
Barrier-Free				
Trench				
Temp. Serv.				
Constr. Serv.				
TCO				
Other				
Service				
Final				
Barrier-Free				

Temp. Cut-in-Card Date Issued

Final Cut-in-Card Date Issued

Annual Pool Inspection

Date of Grounding and Bonding Certification

C. CERTIFICATION IN LIEU OF OATH

I hereby certify that I am the (agent of) owner of record and am authorized to make this application and perform the work listed on this application.

Applicant sign/Contractor sign and seal here:

Print name here: Matthew K. Hofherr

[✓] Licensed Elec. Contractor [ ] Certif'd Landscape Irrigation Contractor [ ] Exempt Applicant

D. TECHNICAL SITE DATA

DESCRIPTION OF WORK:
INS OF A 6.67 KW ARRAY PV SYSTEM

QTY.	SIZE	ITEMS	FEE (Office Use Only)
		Lighting Fixtures	
1		Receptacles ENCLOSBOX	
		Switches	
		Detectors	
		Light Poles	
		Motors—Fract. HP	
		Emergency & Exit Lights	
		Communications Points	
		Alarm Devices/F.A.C. Panel	
23		MICROINVERTERS	
23		TOTAL NUMBERS	$
		Pool Permit/with UW Lights	
		Storable Pool/Spa/Hot Tub	
		KW Elec. Range/Receptacle	
		KW Oven/Surface Unit	
		KW Elec. Water Heater	
		KW Elec. Dryer/Receptacle	
		KW Dishwasher	
		HP Garbage Disposal	
		KW Central A/C Unit	
		HP/KW Space Heater/Air Handler	
		KW Baseboard Heat	
		HP Motors 1/+ HP	
		KW Transformer/Generator	
		AMP Service	
1	60	AMP Subpanels	
		AMP Motor Control Center	
		KW Elec. Sign/Outline Light	
1	~~60~~ 30	Disconnect	

6.67 KW PV

Administrative Surcharge $
Minimum Fee $
State Permit Surcharge Fee $
TOTAL FEE $

NJ-4 JERSEY SHORE

U.C.C. F120 (rev. 11/09)
Internet version

Applicant: When submitting this form to your Local Construction Code Enforcement Office, please provide one original plus three photocopies.

BUILDING SUBCODE
TECHNICAL SECTION

Date Received
Control # 3/15/17

Date Issued
Permit # 17-0785

A. IDENTIFICATION—APPLICANT: COMPLETE ALL APPLICABLE INFORMATION. WHEN CHANGING CONTRACTORS, NOTIFY THIS OFFICE. CALL UTILITY DIG NO: 1-800-272-1000.

Block 838 Lot 16 Qualification Code

Work Site Location 1672 FORGE POND RD
BRICK NJ 08724

Owner in Fee: [illegible]

Te [redacted] e-mail N/A

Address Same as above
street municipality zip code

Contractor: Vivint Solar Developer, LLC Tel. 732-831-7712

Address 687 Prospect St Unit 470-480 e-mail camille.harvey-reyes@vivintsolar.com
Lakewood, NJ 08701

Contractor License No. or Builder Registration No. 13VH06589300 Exp. Date 03-31-17

Home Improvement Contractor Registration No. or Exemption Reason (if applicable):

Federal Emp. ID No. 80-0756438 FAX:

JOB SUMMARY (Office Use Only)

PLAN REVIEW	Date	Initial
[ ] No Plans Required		
[X] All	3-7-17	[illegible]
[ ] Footings/Foundations		
[ ] Structural/Framework		
[ ] Exterior		
[ ] Interior		

Joint Plan Review Required:
[ ] Elec. [ ] Plumb. [ ] Fire [ ] Elevator

SUBCODE APPROVAL for PERMIT
Date: 03/08/17
Approved by: KGH

SUBCODE APPROVAL for CERTIFICATE
[ ] CO [ ] CCO [ ] CA
Date:
Approved by:

INSPECTIONS Type:	Dates (Month/Day) Failure	Failure	Approval	Initial
Footing				
Footing Bonding				
Foundation				
Slab				
Frame				
Truss Sys./Bracing				
Barrier-Free				
Insulation				
Finishes -Base Layer				
Finishes -Final				
Energy				
Mechanical				
TCO				
Other				
Final				
Barrier-Free				

B. BUILDING CHARACTERISTICS

Use Group Present _____ Proposed _____
No. of Stories
Height of Structure ft.
Area — Largest Floor sq. ft.
New Bldg. Area/All Floors sq. ft.
Volume of New Structure cu. ft.
Max. Live Load
Max. Occupancy Load

Constr. Class Present _____ Proposed _____

If Industrialized Building:
State Approved _____ HUD _____

Est. Cost of Bldg. Work:
1. New Bldg. $
2. Rehabilitation $
3. Total (1+ 2) $ 2934

U.C.C. F110 (rev. 11/09)
Internet version

C. CERTIFICATION IN LIEU OF OATH

I hereby certify that I am the (agent of) owner of record and am authorized to make this application.

Sign here: [signature]

Print name here: Steven Murphy

D. TECHNICAL SITE DATA

DESCRIPTION OF WORK

-Support for a photovoltaic (PV) system (solar system)

TYPE OF WORK:
[ ] New Building
[ ] Addition
[ ] Rehabilitation
[ ] Roofing
[ ] Siding
[ ] Fence _____ Height (exceeds 6')
[ ] Sign _____ Sq. Ft.
[ ] Pool
[ ] Retaining Wall _____ Sq. Ft.
[ ] Asbestos Abatement Subchapter 8
[ ] Lead Haz. Abatement NJAC 5:17
[ ] Radon Remediation
[X] Other PV Support
[ ] Demolition

FEE (Office Use Only)
$

Administrative Surcharge $
Minimum Fee $
State Permit Surcharge Fee $
TOTAL FEE $

NJ-4 JERSEY SHORE

Applicant: When submitting this form to your Local Construction Code Enforcement Office, please provide one original plus three photocopies.

ENGINEERING PERMIT APPLICATION

RECEIVING CLERK: _____

PERMIT #: _____

BLOCK: 838 LOT: 16 ADDRESS: 1672 FORGE POND RD

IDENTIFICATION:

1. WORK SITE ADDRESS: 1672 FORGE POND RD BRICK NJ
2. NAME OF OWNER IN FEE: JOSEPH FILI
   ADDRESS: SAA PHONE #: ([redacted]
   FAX #: ( )
3. PRINCIPAL CONTRACTOR: VIVINT SOLAR
   ADDRESS: 687 PROSPECT ST PHONE #: ( )
   LAKEWOOD, NJ 08701 FAX #: ( )
4. ARCHITECT OR ENGINEER: CURT VARDON
   ADDRESS: 1800 W ASHTON LEHI UT 84043 PHONE: # ( ) 877 404 4129
5. RESPONSIBLE PERSON FOR WORK: VIVINT SOLAR
   ADDRESS: SAA

PHONE #: ( ) SAA FAX #: ( ) SAA E-MAIL: CAMILLE.HARVEY-REYES@VIVINTSOLAR.COM

FEE SUMMARY:

APPLICATION FEE:	$
REVIEW FEE:	$
INSPECTION FEE:	$
OTHER _____:	$
BOND(S):	$
TOTAL:	$

SPECIAL CONDITIONS:

OCEAN COUNTY SOILS: _____

DRAINAGE EASEMENTS: _____

UTILITY EASEMENTS: _____

CONSERVATION EASEMENTS: _____

FEMA REQUIREMENTS: _____

D.E.P. PERMITS: _____

BOARD APPROVAL: ☐ PB ☐ ZB

APPLICATION NUMBER: _____

APPROVED DATE: _____

PROJECT DESCRIPTION: ☐ GRADING/CLEARING ☐ ROAD OPENING
☐ SOIL REMOVAL/FILL ☐ RETAINING WALL ☐ POOL
☐ BULKHEAD/DOCK ☐ DWELLING ☐ TREE REMOVAL _____
☒ OTHER SOLAR INSTALLATION

LENGTH: _____ WIDTH: _____ HEIGHT: _____

ENGINEERING REVIEW:

DATE RECEIVED: _____ DATE REJECTED: _____ DATE APPROVED: _____ INITIALS: _____

Zoning Review
Approval
By: [illegible]
Date: 2-22-17

PV SYSTEM SIZE:
6.67 kW DC

KEY

(23) Trina TSM-290DD05A(II) MODULES WITH AN Enphase S230-60-LL-2-US MICRO-INVERTER MOUNTED ON THE BACK OF EACH MODULE

75' OF 1" PVC CONDUIT FROM JUNCTION BOX TO ELECTRICAL PANEL

PV INTERCONNECTION POINT, LOCKABLE DISCONNECT SWITCH, ANSI METER LOCATION, & UTILITY METER LOCATION

JUNCTION BOX ATTACHED TO ARRAY USING ECO HARDWARE TO KEEP JUNCTION BOX OFF ROOF

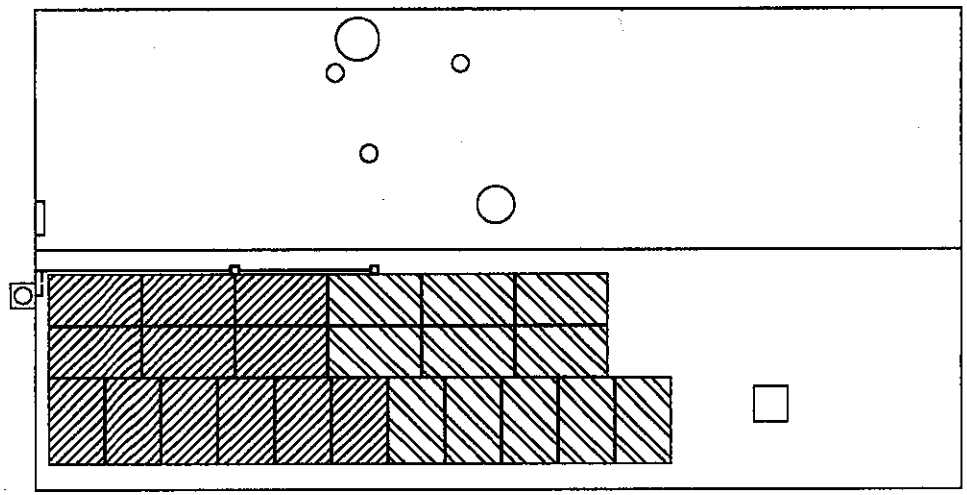

1672 FORGE POND RD, BRICK NJ 08724

PV SYSTEM SITE PLAN

SCALE: 3/32" = 1'-0"

Plans comply with the requirements of the 2015 IRC

Fili Residence
1672 FORGE POND RD
BRICK, NJ 08724
UTILITY ACCOUNT NUMBER: 100 084 562 071

vivint.solar

Last Modified: 2/6/2017

INSTALLER: VIVINT SOLAR
INSTALLER NUMBER: 1.877.404.4129
NJ LICENSE: 13VH06589300
DRAWN BY: RBR | S- 5421420

SHEET NAME: SITE PLAN

SHEET NUMBER: PV 1.0

KEY

- PLUMBING VENTS (SIZE VARIES)
- ROOF VENTS (SIZE VARIES)
- SATELLITE DISH
- CHIMNEY
- SKYLIGHT
- METER #S93942505
- CIRCUIT #1: 12 MODULES
- CIRCUIT #2: 11 MODULES

DESIGNED SECTIONS ARE ON COMP. SHINGLE

1	Roof Section 1 Roof Azimuth: 227 Roof Tilt: 22

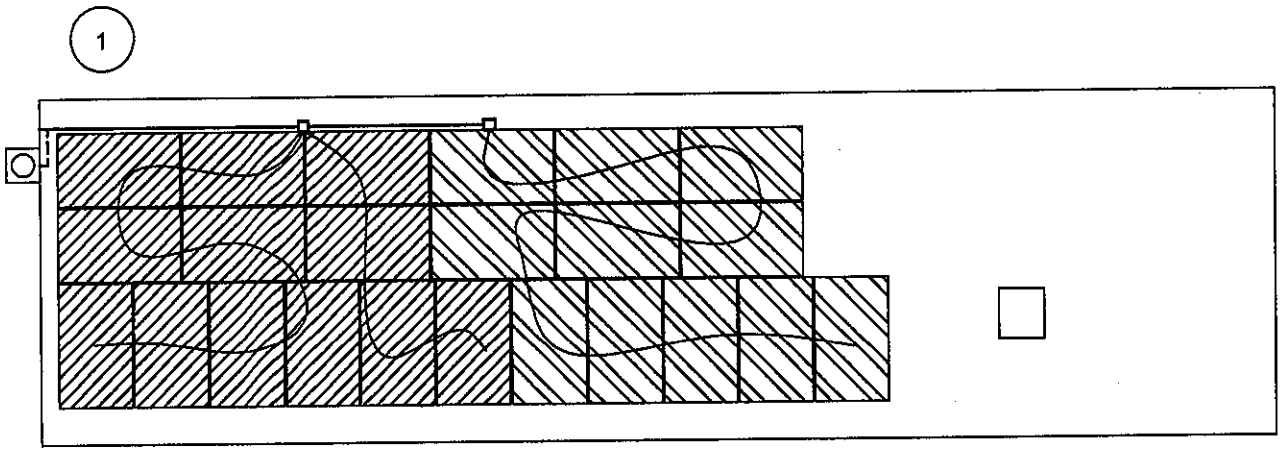

PV SYSTEM ROOF PLAN

SCALE: 1/8" = 1'-0"

Plans comply with the requirements of the 2015 IRC

Fili Residence
1672 FORGE POND RD
BRICK, NJ 08724
UTILITY ACCOUNT NUMBER: 100 084 562 071

vivint. SOLAR

INSTALLER: VIVINT SOLAR
INSTALLER NUMBER: 1.877.404.4129
NJ LICENSE: 13VH06589300
DRAWN BY: RBR | S- 54211420
Last Modified: 2/6/2017

SHEET NAME: ROOF PLAN

SHEET NUMBER: PV 2.0

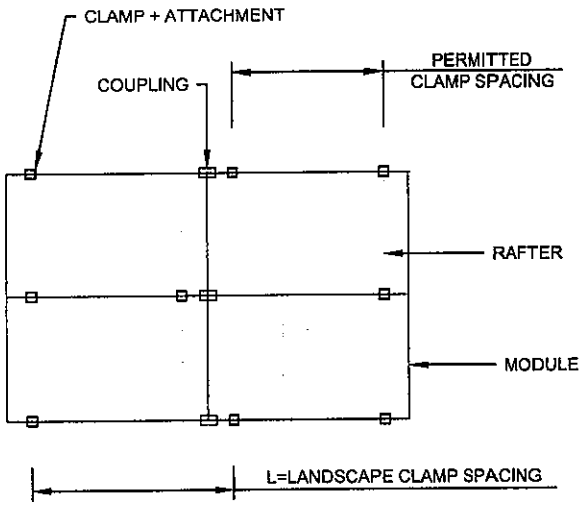

1 / PV 3.0 MODULES IN PORTRAIT/LANDSPACE

NOT TO SCALE

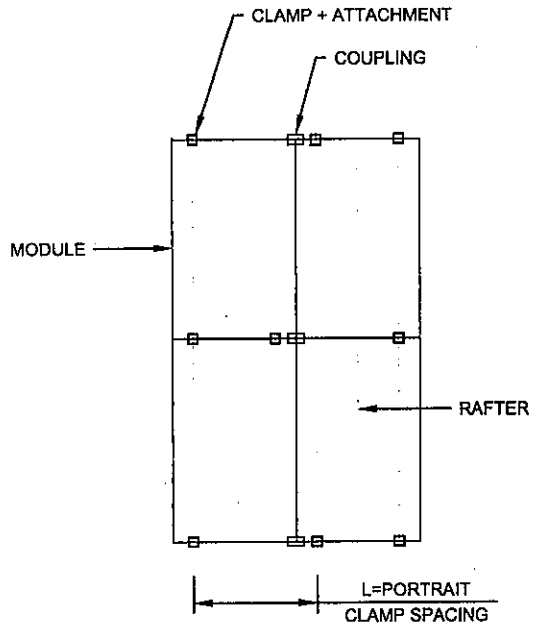

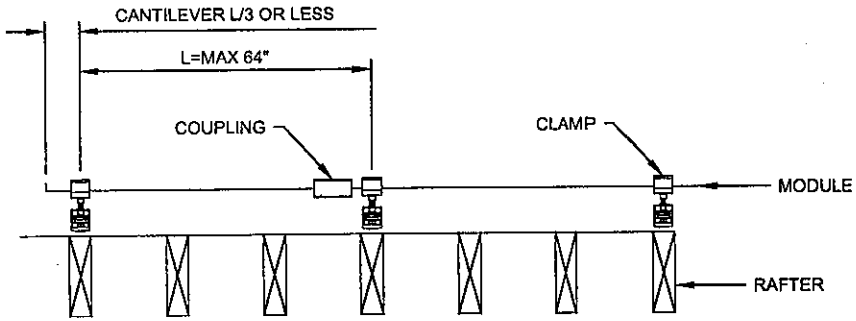

2 / PV 3.0 PV SYSTEM MOUNTING DETAIL

NOT TO SCALE

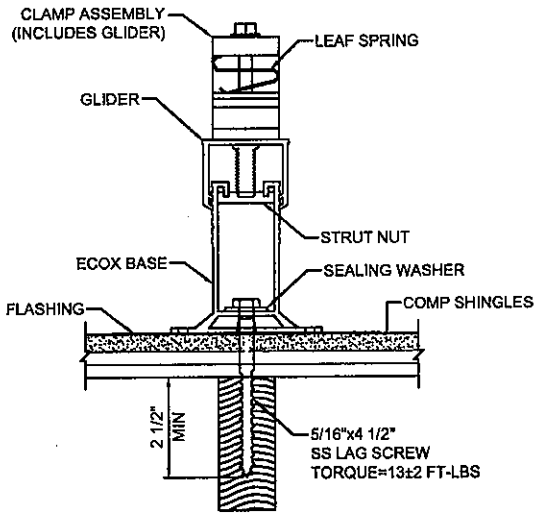

3 / PV 3.0 ECOX MOUNT DETAIL

NOT TO SCALE

Fili Residence
1672 FORGE POND RD
BRICK, NJ 08724
UTILITY ACCOUNT NUMBER: 100 084 562 071

vivint. solar

Last Modified: 2/6/2017

INSTALLER: VIVINT SOLAR
INSTALLER NUMBER: 1.877.404.4129
NJ LICENSE: 13VH06589300
DRAWN BY: RBR
S- 5421420

SHEET NAME: MOUNT. DETAILS

SHEET NUMBER: PV 3.0

Photovoltaic System	
DC System Size	6670
AC System Size	5290
Module/Inverter Count	23

Conduit Conductor Schedule (ALL CONDUCTORS MUST BE COPPER)					
Tag #	Description	Wire Gauge	# of Conductors/Color	Conduit Type	Conduit Size
1	Enphase Engage Cable THWN-2	12 AWG	4(L1, L2, N, G)	N/A-Free Air	N/A-Free Air
1	Bare Copper Ground(EGC/GEC)	6 AWG	1 BARE	N/A-Free Air	N/A-Free Air
2	THWN - 2	10 AWG	6(2L1 2L2 2N) B/R/W	PVC	1"
2	THWN - 2 - Ground	8 AWG	1(GRN)	PVC	1"
3	THWN - 2	10 AWG	3(1L1 1L2 1N) B/R/W	PVC	1"
3	THWN - 2 - Ground	8 AWG	1(GRN)	PVC	1"
4	THWN - 2	10 AWG	3(1L1 1L2 1N) B/R/W	LFNC	1"
4	THWN - 2 - Ground	8 AWG	1(GRN)	LFNC	1"

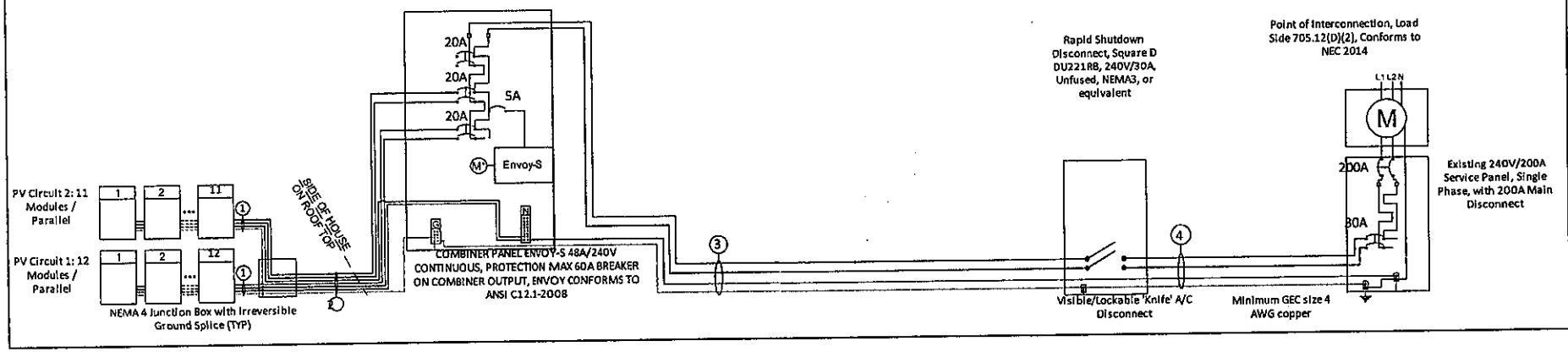

Joseph Fill Residence
1672 FORGE POND RD
BRICK, NJ 8724
Utility Account:100 084 562 071

vivint.solar

Created: 2/16/17

INSTALLER: VIVINT SOLAR
INSTALLER NUMBER: 1.877.404.4129
NJ LICENSE: 13VH06589300
S421420

SHEET NAME: 3-Line Drawing

SHEET NUMBER: E. 1

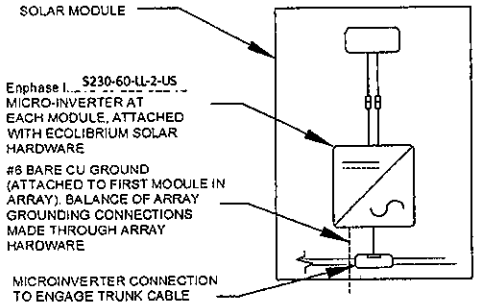

PV Module Rating @ STC		
Module Make/Model	Trina Solar TSM-290 DD05A.08(II)	
Max. Power-Point Current (Imp)	9.01	Amps
Max. Power-Point Voltage (Vmp)	32.2	Volts
Open-Circuit Voltage (Voc)	39.5	Volts
Short-Circuit Current (Isc)	9.5	Amps
Max. Series Fuse (OCPD)	15	Amps
Nom. Max. Power at STC (Pmax)	290	Watts
Max. System Voltage	1000V DC (IEC)(UL)	
Voc Temperature Coefficient	-0.29	%/C

AC Output Current According to NEC 690.8(B)(1)	21.16	Amps
Nominal AC Voltage	240	Volts
THIS PANEL IS FED BY MULTIPLE SOURCES (UTILITY AND SOLAR)		

Rooftop conductor ampacities designed in compliance with NEC 690.8, Tables 310.15(B)(2)(a), 310.15(B)(3)(a), 310.15(B)(3)(c), 310.15(B)(16), Chapter 9 Table 4, 5, & 9. Location specific temperature obtained from ASHRAE 2013 data tables.

ASHRAE 2013 -
Highest Monthly 2% D.B. Design Temp.: 33 °C
Lowest Min. Mean Extreme D.B.: -19.1 °C

Inverter Make/Model	S230-60-LL-2-US	
Max. Dc Volt Rating	48	Volts
Max. Power at 40 C	230	Watts
Nominal AC Voltage	240	Volts
Max. AC Current	0.92	Amps
Max. OCPD Rating	20	Amps
Max. Panels/Circuit	17	
Short Circuit Current	1.05	Amps

Conductor Calculations

- Wire gauge calculated from NEC code 310.15(B)(16) with ambient temperature calculations from NEC 310.15(2)(a).
For "On Roof" conductors we use the 90°C column ampacity, 0.5"-3.5" off-the-roof temperature adjustment from 310.15(B)(3)(c), and raceway fill adjustments from 310.15(B)(16).
For "Off Roof" conductors we use the 75°C column ampacity, or the 90°C column ampacity with the relevant ambient temperature and raceway fill adjustments, whichever is less.
The rating of the conductor after adjustments MUST be greater than, or equal to, the continuous duty uprated output current.
Calculation Example - Wire Rating (90°C) x Ambient Temperature Adjustment x Conduit Fill Adjustment >= Continuous Duty Output Current
(On Roof, Tag 2): 10 gauge wire rated for 40 A, 40 A x 0.76 x 0.8 (4 Conductors) = 24.32 A >= 13.8 A
(Off Roof, Tag 3): 10 gauge wire rated for 35 A, 35 A >= 26.45 A
(Off Roof, Tag 4): 10 gauge wire rated for 35 A, 35 A >= 26.45 A

OCPD Calculations

Breakers sized according to continuous duty output current. PV circuit nominal current based off # of modules per Circuit X (1.25(NEC code 210.19(A)(1)(a) X (.9 Max AC current per micro-inverter)
Circuit #1 = 12 modules, Output Current w/ continuous duty = 13.8 < 20A Breaker
Circuit #2 = 11 modules, Output Current w/ continuous duty = 12.65 < 20A Breaker
system output current w/ continuous duty = 26.45 < 30A (System OCPD)

Other Notes

- All ampacity calculations are made in compliance with NEC 220.5(B)

Joseph Fill Residence
1672 FORGE POND RD
BRICK, NJ 8724
Utility Account:100 084 562 071

vivint.solar

Created: 2/16/17

INSTALLER: VIVINT SOLAR
INSTALLER NUMBER: 1.877.404.4129
NJ LICENSE: 13VH06589300
5421420

SHEET NAME: Notes Page

SHEET NUMBER: E. 2

Zoning Review
Approval
By: [illegible] Solar on roof
Date: 2-23-17

PV SYSTEM SIZE:
6.67 kW DC

KEY

(23) Trina TSM-290DD05A(II) MODULES WITH AN Enphase S230-60-LL-2-US MICRO-INVERTER MOUNTED ON THE BACK OF EACH MODULE

75' OF 1" PVC CONDUIT FROM JUNCTION BOX TO ELECTRICAL PANEL

PV INTERCONNECTION POINT, LOCKABLE DISCONNECT SWITCH, ANSI METER LOCATION, & UTILITY METER LOCATION

JUNCTION BOX ATTACHED TO ARRAY USING ECO HARDWARE TO KEEP JUNCTION BOX OFF ROOF

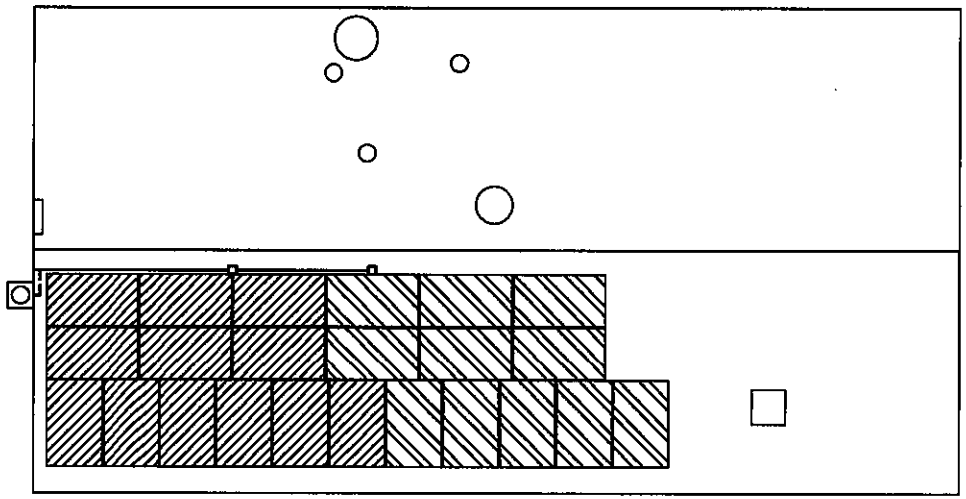

1672 FORGE POND RD, BRICK NJ 08724

PV SYSTEM SITE PLAN

SCALE: 3/32" = 1'-0"

Plans comply with the requirements of the 2015 IRC

Fili Residence
1672 FORGE POND RD
BRICK, NJ 08724
UTILITY ACCOUNT NUMBER: 100 084 562 071

vivint. solar

Last Modified: 2/6/2017

INSTALLER: VIVINT SOLAR
INSTALLER NUMBER: 1.877.404.4129
NJ LICENSE: 13VH06589300
DRAWN BY: RBR
S- 5421420

SHEET NAME: SITE PLAN

SHEET NUMBER: PV 1.0

KEY

- PLUMBING VENTS (SIZE VARIES)
- ROOF VENTS (SIZE VARIES)
- SATELLITE DISH
- CHIMNEY
- SKYLIGHT
- METER #S93942505
- CIRCUIT #1: 12 MODULES
- CIRCUIT #2: 11 MODULES

DESIGNED SECTIONS ARE ON COMP. SHINGLE

1	Roof Section 1 Roof Azimuth: 227 Roof Tilt: 22

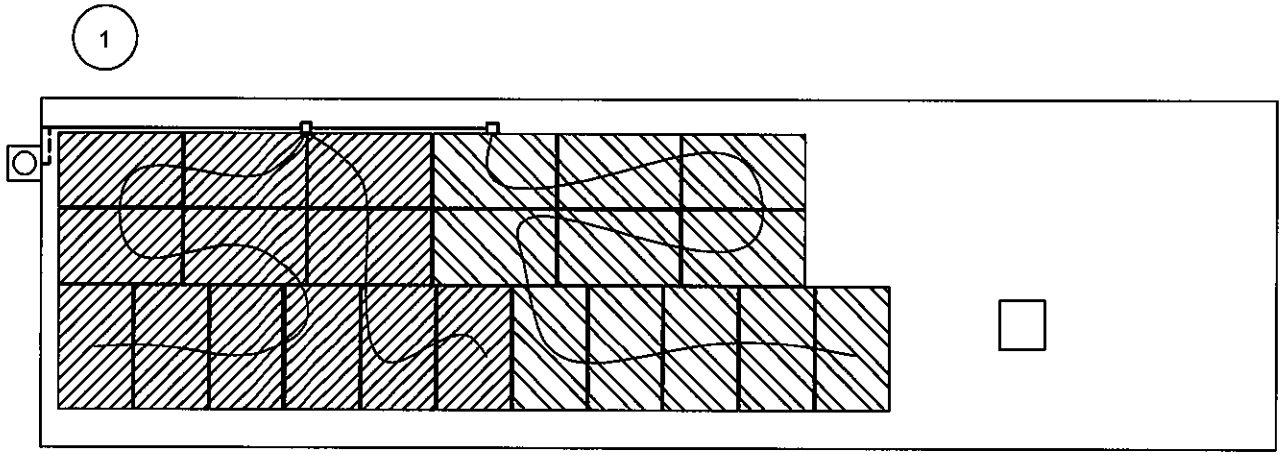

Plans comply with the requirements of the 2015 IRC

PV SYSTEM ROOF PLAN

SCALE: 1/8" = 1'-0"

Fili Residence
1672 FORGE POND RD
BRICK, NJ 08724
UTILITY ACCOUNT NUMBER: 100 084 562 071

vivint.solar

INSTALLER: VIVINT SOLAR
INSTALLER NUMBER: 1.877.404.4129
NJ LICENSE: 13VH06589300
DRAWN BY: RBR
S-5421420
Last Modified: 2/6/2017

SHEET NAME: ROOF PLAN

SHEET NUMBER: PV 2.0

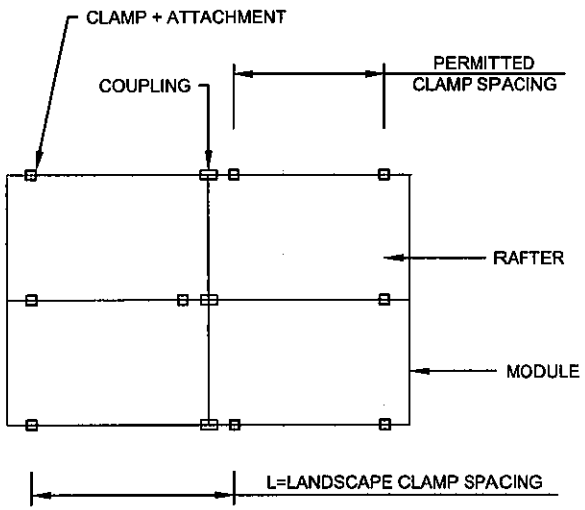

1 PV 3.0 MODULES IN PORTRAIT/LANDSPACE

NOT TO SCALE

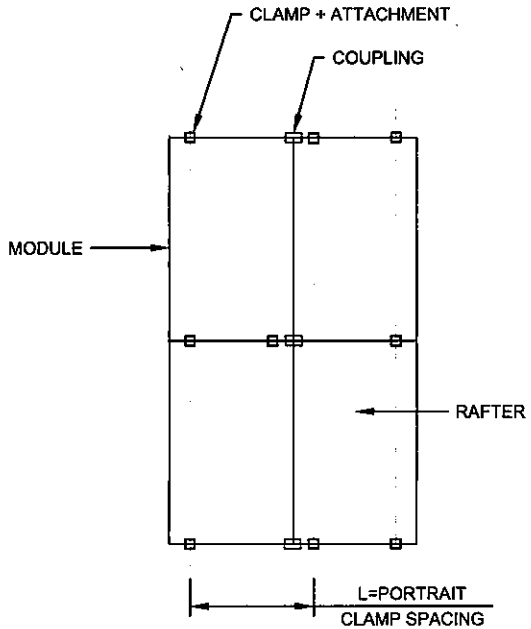

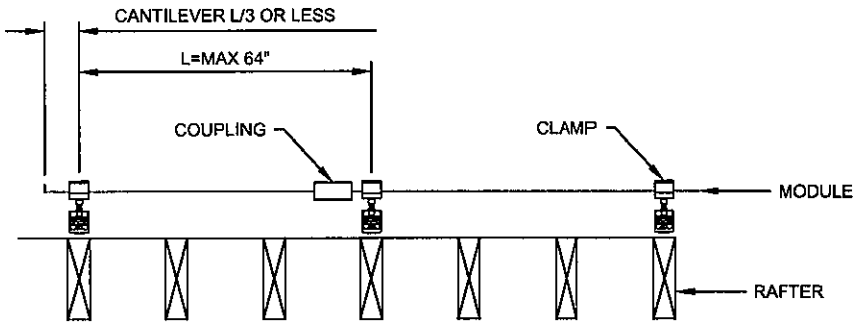

2 PV 3.0 PV SYSTEM MOUNTING DETAIL

NOT TO SCALE

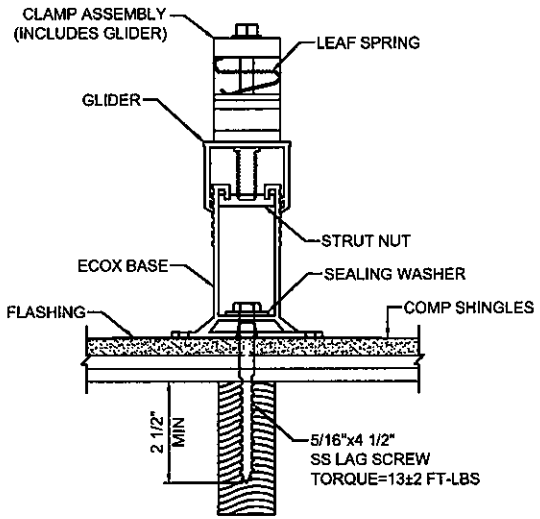

3 PV 3.0 ECOX MOUNT DETAIL

NOT TO SCALE

Fili Residence
1672 FORGE POND RD
BRICK, NJ 08724
UTILITY ACCOUNT NUMBER: 100 084 562 071

vivint.solar

Last Modified: 2/6/2017

INSTALLER: VIVINT SOLAR
INSTALLER NUMBER: 1.877.404.4129
NJ LICENSE: 13VH06589300
DRAWN BY: RBR
S- 5421420

SHEET NAME: MOUNT. DETAILS

SHEET NUMBER: PV 3.0

Photovoltaic System	
DC System Size	6670
AC System Size	5290
Module/Inverter Count	23

Conduit Conductor Schedule (ALL CONDUCTORS MUST BE COPPER)					
Tag #	Description	Wire Gauge	# of Conductors/Color	Conduit Type	Conduit Size
1	Enphase Engage Cable THWN-2	12 AWG	4(L1, L2, N, G)	N/A-Free Air	N/A-Free Air
1	Bare Copper Ground(EGC/GEC)	6 AWG	1 BARE	N/A-Free Air	N/A-Free Air
2	THWN - 2	10 AWG	6(2L1 2L2 2N) B/R/W	PVC	1"
2	THWN - 2 - Ground	8 AWG	1(GRN)	PVC	1"
3	THWN - 2	10 AWG	3(1L1 1L2 1N) B/R/W	PVC	1"
3	THWN - 2 - Ground	8 AWG	1(GRN)	PVC	1"
4	THWN - 2	10 AWG	3(1L1 1L2 1N) B/R/W	LFNC	1"
4	THWN - 2 - Ground	8 AWG	1(GRN)	LFNC	1"

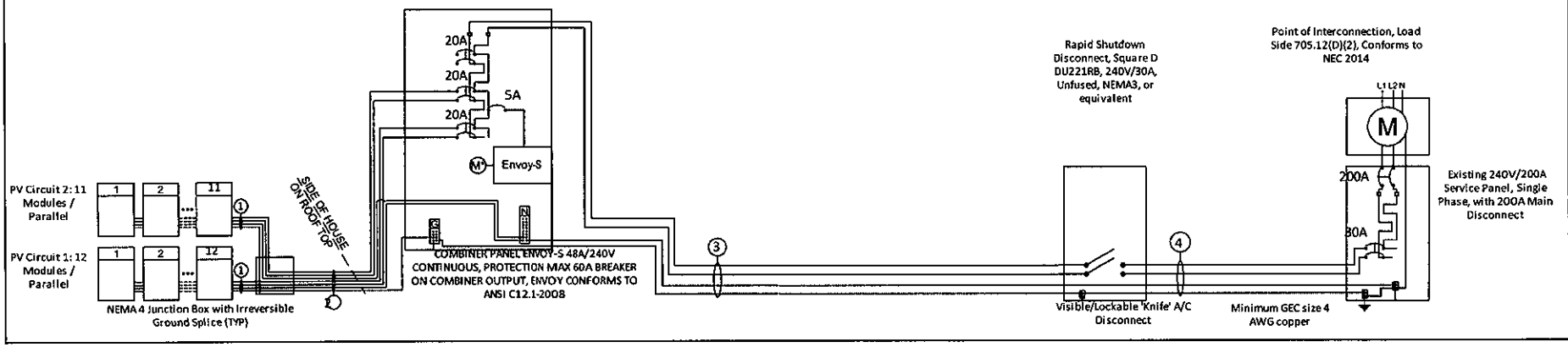

Joseph Fili Residence
1672 FORGE POND RD
BRICK, NJ 8724
Utility Account:100 084 562 071

vivint.solar

Created: 2/16/17

INSTALLER: VIVINT SOLAR
INSTALLER NUMBER: 1.877.404.4129
NJ LICENSE: 13VH06589300
5421420

SHEET NAME: 3-Line Drawing

SHEET NUMBER: E. 1

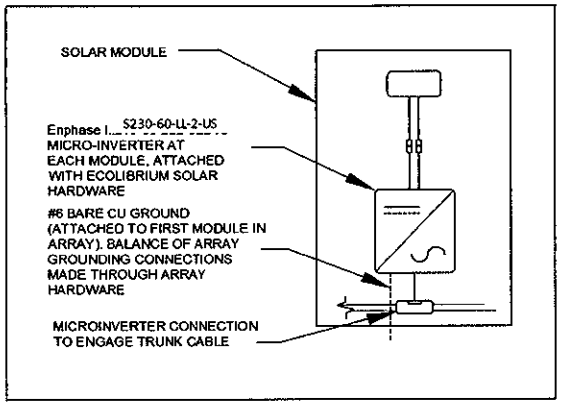

PV Module Rating @ STC		
Module Make/Model	Trina Solar TSM-290 DD05A.08(II)	
Max. Power-Point Current (Imp)	9.01	Amps
Max. Power-Point Voltage (Vmp)	32.2	Volts
Open-Circuit Voltage (Voc)	39.5	Volts
Short-Circuit Current (Isc)	9.5	Amps
Max. Series Fuse (OCPD)	15	Amps
Nom. Max. Power at STC (Pmax)	290	Watts
Max. System Voltage	1000V DC (IEC)(UL)	
Voc Temperature Coefficient	-0.29	%/C

AC Output Current According to NEC 690.8(B)(1)	21.16	Amps
Nominal AC Voltage	240	Volts
THIS PANEL IS FED BY MULTIPLE SOURCES (UTILITY AND SOLAR)		

Rooftop conductor ampacities designed in compliance with NEC 690.8, Tables 310.15(B)(2)(a), 310.15(B)(3)(a), 310.15(B)(3)(c), 310.15(B)(16), Chapter 9 Table 4, 5, & 9. Loacation specific temperature obtained from ASHRAE 2013 data tables.

ASHRAE 2013 -
Highest Monthly 2% D.B. Design Temp.: 33 °C
Lowest Min. Mean Extreme D.B.: -19.1 °C

Inverter Make/Model	S230-60-LL-2-US	
Max. Dc Volt Rating	48	Volts
Max. Power at 40 C	230	Watts
Nominal AC Voltage	240	Volts
Max. AC Current	0.92	Amps
Max. OCPD Rating	20	Amps
Max. Panels/Circuit	17	
Short Circuit Current	1.05	Amps

Conductor Calculations

- Wire gauge calculated from NEC code 310.15(B)(16) with ambient temperature calculations from NEC 310.15(2)(a).
For "On Roof" conductors we use the 90°C column ampacity, 0.5"-3.5" off-the-roof temperature adjustment from 310.15(B)(3)(c), and raceway fill adjustments from 310.15(B)(16).
For "Off Roof" conductors we use the 75°C column ampacity, or the 90°C column ampacity with the relevant ambient temperature and raceway fill adjustments, whichever is less.
The rating of the conductor after adjustments MUST be greater than, or equal to, the continuous duty uprated output current.
Calculation Example - Wire Rating (90°C) x Ambient Temperature Adjustment x Conduit Fill Adjustment >= Continuous Duty Output Current
(On Roof, Tag 2): 10 gauge wire rated for 40 A, 40 A x 0.76 x 0.8 (4 Conductors) = 24.32 A >= 13.8 A
(Off Roof, Tag 3): 10 gauge wire rated for 35 A, 35 A >= 26.45 A
(Off Roof, Tag 4): 10 gauge wire rated for 35 A, 35 A >= 26.45 A

OCPD Calculations

Breakers sized according to continuous duty output current. PV circuit nominal current based off # of modules per Circuit X (1.25(NEC code 210.19(A)(1)(a) X (.9 Max AC current per micro-inverter)
Circuit #1 = 12 modules, Output Current w/ continuous duty = 13.8 < 20A Breaker
Circuit #2 = 11 modules, Output Current w/ continuous duty = 12.65 < 20A Breaker
system output current w/ continuous duty = 26.45 < 30A (System OCPD)

Other Notes

- All ampacity calculations are made in compliance with NEC 220.5(B)

Joseph Fili Residence
1672 FORGE POND RD
BRICK, NJ 8724
Utility Account:100 084 562 071

vivint.solar

Created: 2/16/17

INSTALLER: VIVINT SOLAR
INSTALLER NUMBER: 1.877.404.4129
NJ LICENSE: 13VH06589300
5421420

SHEET NAME: Notes Page

SHEET NUMBER: E. 2

NEC 2014 — Enphase System Code Compliance

Overview

This technical brief discusses new NEC 2014 requirements that apply to Enphase Microinverter Systems. It is useful for installers, electricians, and electrical inspectors or authorities having jurisdiction (AHJs) in understanding how code-compliance is handled where NEC 2014 is adopted. Main topics discussed in this document are:

- NEC 2014 Section 690.12 Rapid Shutdown of PV Systems on Buildings
- NEC 2014 Section 705.12 Point of Connection
- NEC 2014 Section 690.11 DC Arc-Fault Circuit Protection

NEC 2014 Section 690.12 Rapid Shutdown of PV Systems on Buildings

Enphase Microinverter Systems fully meet the rapid shutdown requirement without the need to install additional electrical equipment. Properly labeling the PV system power source and rapid shutdown ability is required per NEC Section 690.56 (B) and (C).

Solar electric PV systems with Enphase Microinverters have one utility-interactive inverter directly underneath each solar module, converting low voltage DC to utility grid-compliant AC. When the utility grid is available and the sun is shining, each microinverter verifies that the utility grid is operating within the IEEE 1547 requirements. Only then does it export AC power into the electric service for use by loads onsite or export power to the utility grid for others to use. When the utility grid has a failure, or the PV system AC circuits are disconnected from the utility service via an AC breaker, AC disconnect, or removal of the solar or main utility service meter, the microinverters stop producing AC power in fewer than six AC cycles. Enphase Microinverters are not capable of operating as an AC voltage source. This means that without an AC utility source, Enphase Microinverters are not able to energize connected wiring and no AC voltage or current can be injected into the inverter output circuits or the grid.

When the AC utility source is removed from the inverter output circuits via any means, such as an AC breaker, AC disconnect or removal of the solar or main utility service meter, this equipment performs the rapid shutdown function per 690.12. With an Enphase Microinverter System this shutdown occurs well within the 690.12 required 10 seconds, and there are no other conductors energized more than 1.5 m (5 ft) in length inside a building or more than 3 m (10 ft) from a PV array.

Code Reference

> **690.12 Rapid Shutdown of PV Systems on Buildings.** PV system circuits installed on or in buildings shall include a rapid shutdown function that controls specific conductors in accordance with 690.12(1) through (5) as follows.
>
> > (1) Requirements for controlled conductors shall apply only to PV system conductors of more than 1.5 m (5 ft) in length inside a building, or more than 3 m (10 ft) from a PV array.
> > (2) Controlled conductors shall be limited to not more than 30 volts and 240 volt-amperes within 10 seconds of rapid shutdown initiation.
> > (3) Voltage and power shall be measured between any two conductors and between any conductor and ground.
> > (4) The rapid shutdown initiation methods shall be labeled in accordance with 690.56(B).
> > (5) Equipment that performs the rapid shutdown shall be listed and identified.

© 2015 Enphase Energy Inc. All rights reserved.

NEC 2014 Section 705.12 Point of Connection (AC Arc-Fault Protection)

In this section we explain how to comply with NEC 2014 Section 705.12 Point of Connection when installing Enphase Energy Systems with:

- Supply Side Connection
- Load-Side Connection to Single-Phase 120/240 Volt Services
- Three-Phase 208/120 Volt Services

Supply Side Connection

Solution: No AC AFCI (Arc-Fault Circuit Interrupter) protection is required.

Code Reference

> **705.12 Point of Connection** The output of an interconnected electric power source shall be connected as specified in 705.12(A), (B), (C) **or** (D).

Since the operator "OR" is used to define connection types, the code seems to intend that if one criteria is met, for example (A), the other criteria are not applicable.

Code Reference

> **705.12(A) Supply Side.** An electric power production source shall be permitted to be connected to the supply side of the service disconnecting means as permitted in 230.82(6). The sum of the ratings of all overcurrent devices connected to power production sources shall not exceed the rating of the service.
>
> **705.12(B) Integrated Electrical Systems.** ...
>
> **705.12(C) Greater Than 100 kW.** ...
>
> **705.12(D) Utility-Interactive Inverters.** ...

230.82(6) lists solar photovoltaic systems as eligible for equipment permitted to be connected to the supply side of the service disconnecting means. Since Enphase Energy Systems are solar photovoltaic systems, a supply side connection of an Enphase System may be accepted by AHJs to fully meet Code section 705.12. Since 705.12(A) requirements are met, it seems logical that the 705.12(D) requirements for connections to the load-side of the service disconnect means are not applicable.

Load-Side Connection to Single-Phase 120/240 Volt Services

Solution: Refer to section 90.4 and the previous code edition, NEC 2011. No **listed** backfeed capable AC AFCI solutions or acceptable equipment to enclose the cable harness exist. Until such products are generally available from manufacturers, when making load side connections, complying with **NEC 2014** Section 705.12 (D) (6) is achieved by discretionary guidance per NEC 2014 Section 90.4. This means to refer to the previous code edition **NEC 2011** Section 705.12, where AC Arc-Fault Circuit Protection is not a requirement for utility-interactive inverters.

NEC 2014 Code Reference

> **705.12(D) Utility Interactive Inverters.** The output of a utility-interactive inverter shall be permitted to be connected to the load side of the service disconnecting means of the other source(s) at any distribution equipment on the premises. Where distribution equipment, including switchgear, switchboards, or panelboards, is fed simultaneously by a primary source(s) of electricity and one or more utility-interactive inverters, and where this distribution equipment is

© 2015 Enphase Energy Inc. All rights reserved.

capable of supplying multiple branch circuits or feeders, or both, the interconnecting provisions for the utility-interactive inverter(s) shall comply with 705.12(D)(1) through (D)(6).

705.12 (D) (4) Suitable for Backfeed. Circuit breakers, if backfed, shall be suitable for such operation.

705.12(D)(6) Wire Harness and Exposed Cable Arc-Fault Protection. A utility-interactive inverter(s) that has a wire harness or cable output circuit rated 240 V, 30 amperes, or less, that is not installed within an enclosed raceway, shall be provided with listed ac AFCI protection.

This NEC 2014 code section allows connection of an electric power source to the load side of service disconnect means and requires that the "interconnecting provisions for the utility-interactive inverter(s) shall comply with 705.12(D)(1) through (D)(6)". Since the Enphase system contains one or more microinverters, which are the utility-interactive inverter(s), this section applies when connecting a system to the load side of a service disconnecting means. 705.12(D)(6) specifically requires that exposed AC cable systems, such as the Enphase Engage Cable, which is not feasibly run in enclosed raceway, to be protected by **listed** AC Arc-Fault Circuit Interrupter (AC AFCI) functionality. Given that utility-interactive inverters cannot operate without a utility service source, the location of the AC AFCI protecting the cable must logically be applied at the utility source side of the circuit. AC AFCI circuit breakers are the commonly available devices for single-phase branch circuits.

No suitable for backfeed AC AFCI circuit breakers exist.

Since Enphase Microinverters are utility-interactive inverters that backfeed into the electrical service through the overcurrent protection device, any AC AFCI circuit breakers must be specifically backfeed capable, per 705.12(D)(4).

If terminals of circuit breaker AFCIs are marked "Line" and "Load," then the AFCI product is not backfeed capable.

No UL standard for backfeed testing exists for AC AFCI circuit breakers.

Furthermore, 705.12(D)(6) requires that ac AFCI protection must be **"listed."** For a product or product category to become "listed," a standard safety test procedure, such as a UL standard, must exist. The testing standard for AFCI circuit breakers is UL1699, which currently does not have provisions for testing this product category for backfeed applications. It is clear, that the code requirement is ahead of new product availability.

Summary

Until suitable for backfeed and listed AC AFCI circuit breakers become generally available, an AHJ is permitted to refer to 90.4, i.e., the previous code edition, NEC 2011.

Code Reference

90.4 Enforcement.

This Code may require new products, constructions, or materials that may not yet be available at the time the Code is adopted. In such event, the authority having jurisdiction may permit the use of the products, constructions, or materials that comply with the most recent previous edition of this Code adopted by the jurisdiction.

© 2015 Enphase Energy Inc. All rights reserved.

Three-Phase 208/120 Volt Services

Solution: The compliance solution for systems interconnected to three-phase systems is to defer to NEC 90.4. There are no three-phase AC AFCI detection devices in existence. Until backfeed capable three-phase AC AFCI circuit breakers become generally available, an AHJ is permitted to refer to 90.4, i.e., the previous code edition, NEC 2011. Additionally, the NEC 210.12 code intention for any AC AFCI protection is for single-phase applications in dwellings or dormitory units and not meant for three-phase applications, example:

Code Reference

> **210.12 Arc-Fault Circuit-Interrupter Protection. ...**
>
> **210.12(A) Dwelling Units**. All 120-volt, single-phase, 15- and 20-ampere branch circuits.....
>
> **210.12(B) Branch Circuit Extensions or Modifications — Dwelling Units. ...**
>
> **210.12(C) Dormitory Units.** All 120-volt, single-phase, 15- and 20-ampere branch circuits

Although Chapter 7 applies to "Special Conditions," the industry must be able to supply generally available equipment that is safe to use and meets the requirements for these special applications. For 705.12(D) (6) this is not the case for three-phase applications as there are no listed three-phase AC AFCI detection devices available.

NEC 2014 Section 690.11 DC Arc-Fault Circuit Protection

This requirement is for direct current (DC) Arc-Fault Circuit protection and only applies to systems with DC voltages above 80 VDC. Enphase Microinverter systems are exempted from this requirement as they always operate well below 80 VDC. The requirement is basically unchanged from the NEC 2011, and it is unnecessary to add DC AFCI to an Enphase Microinverter System installation.

Code Reference

> **690.11 Arc-Fault Circuit Protection (Direct Current)**. Photovoltaic systems with dc source circuits, dc output circuits, or both, operating at a PV system maximum system voltage of 80 volts or greater, shall be protected by a listed (dc) arc-fault circuit interrupter, PV type, or other system components listed to provide equivalent protection.

© 2015 Enphase Energy Inc. All rights reserved.

FILE COPY

vivint.
Structural Group

1800 W Ashton Blvd.
Lehi, UT 84043

Jon P. Ward, SE, PE
Structural Engineering Manager
jon.ward@vivintsolar.com

J. Matthew Walsh, SE, PE
Senior Structural Engineering Manager
james.walsh@vivintsolar.com

Clint C. Karren, PE
Structural Engineering Manager
clint.karren@vivintsolar.com

February 13, 2017

Re: Structural Engineering Services
Fili Residence
1672 Forge Pond Road, Brick, NJ
S-5421420; NJ-04

Zoning Review
Approval
By: Solar on roof
Date: 2-23-17

To Whom It May Concern:

Pursuant to your request, we have reviewed the following information regarding solar panel installation on the roof of the above referenced home:

1. Site Visit/Verification Form prepared by a representative from our office under my supervision identifying specific site information including size and spacing of members for the existing roof structure.
2. Proposed layout of the system including connection details for the solar panels.
3. Photographs of the interior and exterior of the roof system identifying existing structural members and their conditions.

Based on the above information we have evaluated the structural capacity of the existing roof system to support the additional loads imposed by the solar panels and have the following comments related to our review and evaluation:

Description of Residence:

The existing residence is typical wood framing construction with the roof system consisting of the following:

- Roof Section: Dimensional lumber - 2x6 at 16" on center. The attic space is unfinished and photos indicate that there was free access to visually inspect the size and condition of the roof members. The interior horizontal length of the rafter used for design verification is 12.99' with an additional 2' eave.

Our evaluation is based on detailed structural calculations specific to this residence prepared by this office. Our calculations are based on ASCE 7-10/NDS code requirements and the specific wood properties of the structural members for this roof system, (see enclosed calculations). Span tables were not utilized in our determination as they are conservative, general, and not job specific.

All wood material utilized for the roof system is assumed to be Hem-Fir (North) #2 or better with standard construction components. The existing roofing material consists of a maximum of two layers of composite shingle.

A. Loading Criteria

9.13 PSF = Dead Load (roofing/framing)
2.59 PSF = Dead Load (solar panels/mounting hardware)
11.72 PSF = Total Dead Load

30 PSF = Ground Snow Load (based on local requirements)

Wind speed of 125 mph (based on Exposure Category B - the total area subject to wind uplift is calculated for the Interior, Edge, and Corner Zones of the dwelling.)

TOWNSHIP OF BRICK
RELEASED FOR PERMIT INITIAL DATE
Building Subcode
Plumbing Subcode
Fire Subcode
Electrical Subcode
Plan Reviewer 3-7-17
Plans Released 3-7-17
Construction Official

*SEE PG 2. AND PV 2.0

vivint.

B. Solar Panel Anchorage

1. The solar panels shall be mounted in accordance with the most recent "Ecolibrium Solar Installation Manual", which can be found on the Ecolibrium Solar website (www.ecolibriumsolar.com). If during solar panel installation, the roof framing members appear unstable or deflect non-uniformly, our office should be notified before proceeding with the installation.
2. The solar panels are 1½" thick and mounted 4½" off the roof for a total height off the existing roof of 6". At no time will the panels be mounted higher than 6" above the existing plane of the roof.
3. Maximum allowable pullout per lag screw is 235 lbs/inch of penetration as identified in the National Design Specifications (NDS) of timber construction specifications for Hem-Fir (North). Based on our evaluation, the pullout value, utilizing a penetration depth of 2½", is less than the maximum allowable per connection and therefore is adequate.
4. The maximum allowed spacing was calculated for the Wind Speed shown in paragraph A above, using the wind load uplift procedures of ASCE 7-10 and is specified below. The following values have been verified by in-house testing and the mounting hardware manufacturers' data, which are available upon request. Panel support connections shall be staggered to distribute load to adjacent members.

	Modules in Landscape			Modules in Portrait		
Roof Zone	Interior	Edge	Corner	Interior	Edge	Corner
Max Vertical Spacing (in)	40	40	40	66	66	66
Max Horizontal Spacing (in)	64	64	64	64	64	64
Max Uplift Load (lbs)	213	174	163	359	293	275

C. Summary

Based on the above evaluation, with appropriate panel anchors being utilized the roof system designed on will adequately support the additional loading imposed by any solar array size and configuration, if installed correctly. This evaluation is in conformance with the 2015 International Residential Code New Jersey Edition, current industry standards and practice, and the information supplied to us at the time of this report.

Should you have any questions regarding the above or if you require further information do not hesitate to contact me.

Regards,

Clint C. Karren, PE
NJ License No. 24GE05304800

vivint.
Structural Group

1800 W Ashton Blvd.
Lehi, UT 84043

Jon P. Ward, SE, PE
Structural Engineering Manager
jon.ward@vivintsolar.com

J. Matthew Walsh, SE, PE
Senior Structural Engineering Manager
james.walsh@vivintsolar.com

Clint C. Karren, PE
Structural Engineering Manager
clint.karren@vivintsolar.com

Structural Analysis Report

Project Address

Fili Residence
1672 Forge Pond Road
Brick, NJ

Date: February 13, 2017

Residence

Roof Area	3000 sf
Upper Floor Area	0 sf
Number of Stories	1
Type of Construction	Wood-Framed with Rated shear panels
Mean Roof height	15 ft
Upper Floor height	0 ft

Location Parameters

Latitude	33.841
Longitude	-117.85
Site Class	D
Risk Category	II

Seismic Parameters

S_S =	1.50 g	0.2 sec Spectral Response Acceleration
S_1 =	0.55 g	1.0 sec Spectral Response Acceleration
F_a =	1.0	Site Coefficient from ASCE 7-10, Table 11.4-1
F_v =	1.5	Site Coefficient from ASCE 7-10, Table 11.4-2
S_{DS} =	1.00 g	Short Period Design Spectral Acceleration
S_{D1} =	0.55 g	1 Second Period Design Spectral Acceleration

Wind Parameters

Wind Speed	125 mph
Exposure Category	B
Roof Angle, Q	22.0 deg

Product Information

No. of Panels	20	
Weight	2.59 psf	including mounting system
Installed Area	351.7	ft^2
No. of Connectors	26	

Summary

$M_{existing}$ =	847.79 lb-ft
M_{new} =	802.46 lb-ft

Total New Gravity Loads are less than Existing Loads. OK

Existing Structural Elements Carrying Gravity Load

2015 International Existing Building Code Section 707.2
2015 International Residential Code Section AJ501.4

Existing

Roof Dead Load
4 psf Composite Shingle
2 psf 3/4" Plywood Sheathing
2 psf Roof Framing @ 16 in. o.c.
0 psf Ceiling, Mechanical, Electrical
1 psf Miscellaneous
9 psf TOTAL

Roof Live Load
20 psf

Ground Snow Load
30 psf

Wall Dead Load
8 ft Wall Height
300 ft Wall Length
12 psf Wall Weight

Additional

Roof Dead Load
2.59 psf Solar Panel Weight

Roof Live Load with Solar Panels
0 psf

Total per Rafter

Total Existing Roof Load = DL_{ROOF} + (LL_{ROOF} or Snow) x Spacing
40.18 plf

Total New Roof Load = DL_{ROOF} + DL_{ADD} + (LL_{ROOF} or Snow) x Spacing
38.03 plf

Change in Demand = (Total New Load - Existing Load) / Existing Load
-5.35%

Total New Gravity Loads are less than Existing Loads. OK

2015 IEBC Section 707.2 states:
"Where addition or replacement of roofing or replacement of equipment results in additional dead loads, structural components supporting such reroofing or equipment shall comply with the gravity load requirements of the *International Building Code* requirements.
EXCEPTION 1. Structural elements where the additional dead load from the roofing or equipment does not increase the force in the element by more than 5 percent."

2015IRC Section AJ501.4 states:
"The minimum design loads for the structure shall be the loads applicable at the time the building was constructed, provided that a dangerous condition is not created. Structural elements that are uncovered during the course of the *alteration* and that are found to be unsound or dangerous shall be made to comply with the applicable requirements of this code."

2012 IBC / 2016 CBC Section 3404A.3 states:
"Any existing gravity load-carrying structural element for which an alteration causes an increase in design gravity load of more than 5 percent shall be strengthened, supplemented, replaced or otherwise altered as needed to carry the increased gravity load required by this code for new structures."

vivint.

PV SYSTEM SIZE:
6.67 kW DC

KEY

(23) Trina TSM-290DD05A(II) MODULES WITH AN Enphase S230-60-LL-2-US MICRO-INVERTER MOUNTED ON THE BACK OF EACH MODULE

75' OF 1" PVC CONDUIT FROM JUNCTION BOX TO ELECTRICAL PANEL

PV INTERCONNECTION POINT, LOCKABLE DISCONNECT SWITCH, ANSI METER LOCATION, & UTILITY METER LOCATION

JUNCTION BOX ATTACHED TO ARRAY USING ECO HARDWARE TO KEEP JUNCTION BOX OFF ROOF

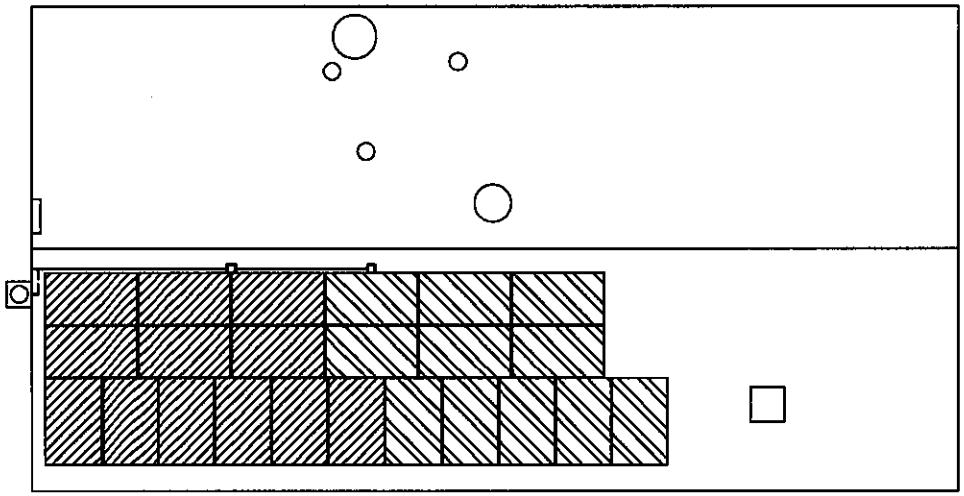

1672 FORGE POND RD, BRICK NJ 08724

PV SYSTEM SITE PLAN

SCALE: 3/32" = 1'-0"

Plans comply with the requirements of the 2015 IRC

Fili Residence
1672 FORGE POND RD
BRICK, NJ 08724
UTILITY ACCOUNT NUMBER: 100 084 562 071

vivint.solar

Last Modified: 2/6/2017

INSTALLER: VIVINT SOLAR
INSTALLER NUMBER: 1.877.404.4129
NJ LICENSE: 13VH06589300
DRAWN BY: RBR
S- 5421420

SHEET NAME: SITE PLAN

SHEET NUMBER: PV 1.0

KEY

- PLUMBING VENTS (SIZE VARIES)
- ROOF VENTS (SIZE VARIES)
- SATELLITE DISH
- CHIMNEY
- SKYLIGHT
- METER #S93942505
- CIRCUIT #1: 12 MODULES
- CIRCUIT #2: 11 MODULES

DESIGNED SECTIONS ARE ON COMP. SHINGLE

1	Roof Section 1 Roof Azimuth: 227 Roof Tilt: 22

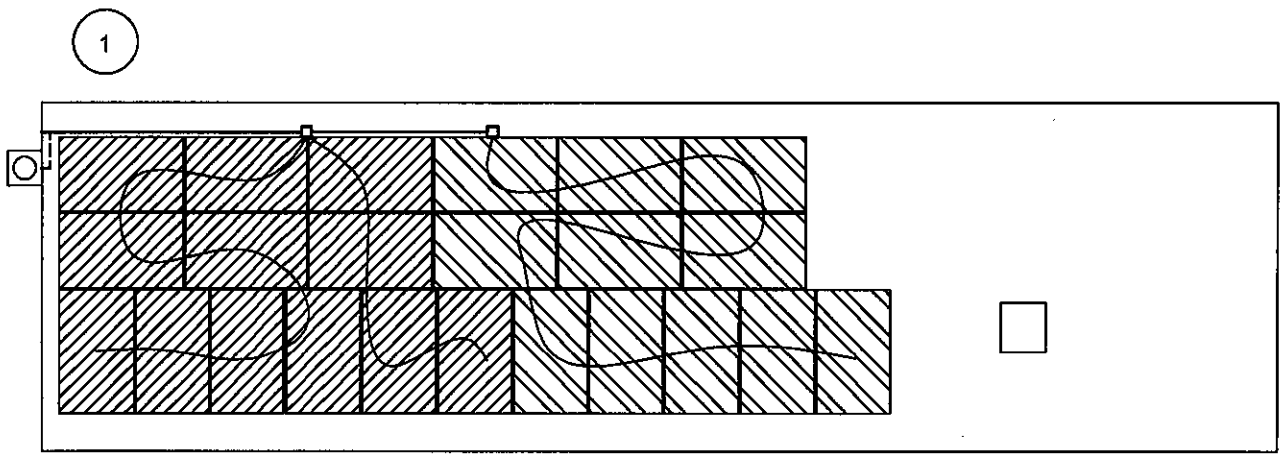

PV SYSTEM ROOF PLAN

SCALE: 1/8" = 1'-0"

Plans comply with the requirements of the 2015 IRC

Fili Residence
1672 FORGE POND RD
BRICK, NJ 08724
UTILITY ACCOUNT NUMBER: 100 084 562 071

vivint.solar

Last Modified: 2/6/2017

INSTALLER: VIVINT SOLAR
INSTALLER NUMBER: 1.877.404.4129
NJ LICENSE: 13VH06589300
DRAWN BY: RBR
S- 5421420

SHEET NAME: ROOF PLAN

SHEET NUMBER: PV 2.0

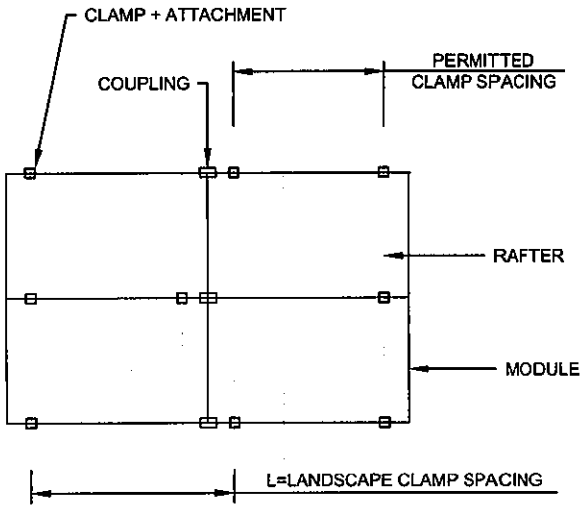

1 PV 3.0 MODULES IN PORTRAIT/LANDSPACE

NOT TO SCALE

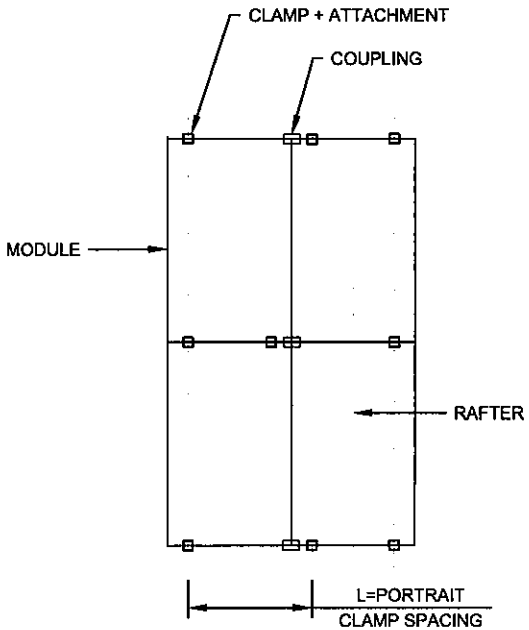

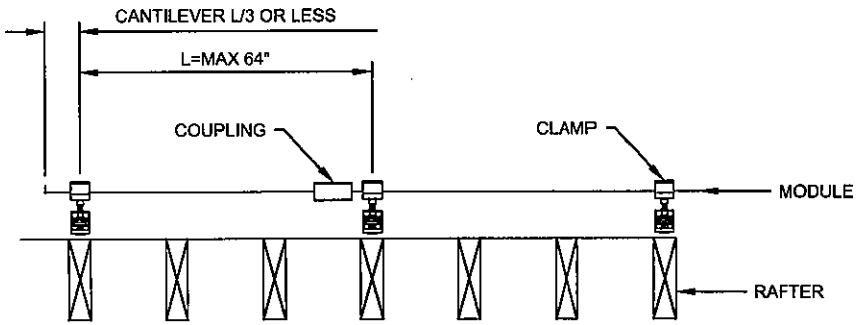

2 PV 3.0 PV SYSTEM MOUNTING DETAIL

NOT TO SCALE

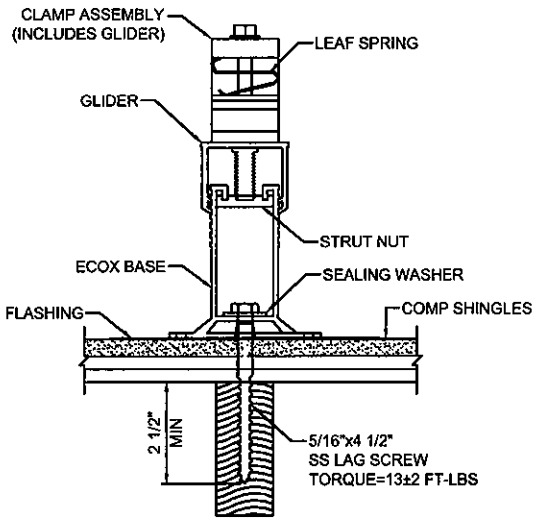

3 PV 3.0 ECOX MOUNT DETAIL

NOT TO SCALE

Fili Residence
1672 FORGE POND RD
BRICK, NJ 08724
UTILITY ACCOUNT NUMBER: 100 084 562 071

vivint.solar

Last Modified: 2/6/2017

INSTALLER: VIVINT SOLAR
INSTALLER NUMBER: 1.877.404.4129
NJ LICENSE: 13VH06589300
DRAWN BY: RBR
S- 5421420

SHEET NAME: MOUNT. DETAILS

SHEET NUMBER: PV 3.0

Photovoltaic System	
DC System Size	6670
AC System Size	5290
Module/Inverter Count	23

Conduit Conductor Schedule (ALL CONDUCTORS MUST BE COPPER)					
Tag #	Description	Wire Gauge	# of Conductors/Color	Conduit Type	Conduit Size
1	Enphase Engage Cable THWN-2	12 AWG	4(L1, L2, N, G)	N/A-Free Air	N/A-Free Air
1	Bare Copper Ground(EGC/GEC)	6 AWG	1 BARE	N/A-Free Air	N/A-Free Air
2	THWN - 2	10 AWG	6(2L1 2L2 2N) B/R/W	PVC	1"
2	THWN - 2 - Ground	8 AWG	1(GRN)	PVC	1"
3	THWN - 2	10 AWG	3(1L1 1L2 1N) B/R/W	PVC	1"
3	THWN - 2 - Ground	8 AWG	1(GRN)	PVC	1"
4	THWN - 2	10 AWG	3(1L1 1L2 1N) B/R/W	LFNC	1"
4	THWN - 2 - Ground	8 AWG	1(GRN) .	LFNC	1"

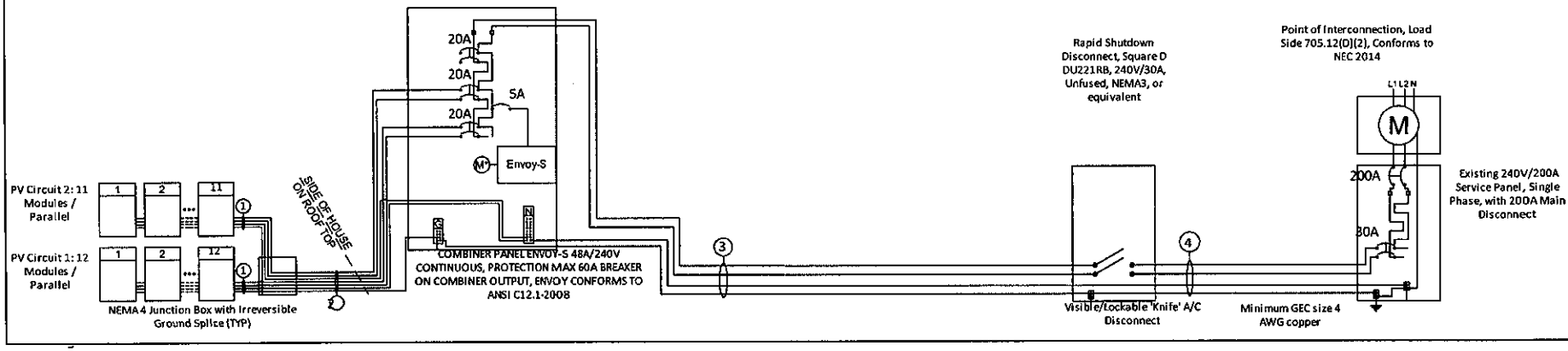

Joseph Fili Residence
1672 FORGE POND RD
BRICK, NJ 8724
Utility Account:100 084 562 071

vivint.solar

Created: 2/16/17

INSTALLER: VIVINT SOLAR
INSTALLER NUMBER: 1.877.404.4129
NJ LICENSE: 13VH06589300
5421420

SHEET NAME: 3-Line Drawing

SHEET NUMBER: E. 1

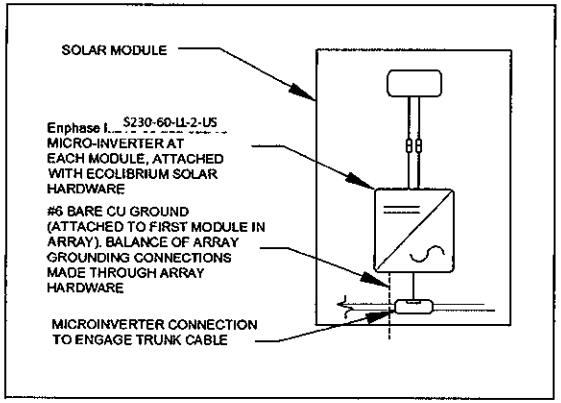

PV Module Rating @ STC		
Module Make/Model	Trina Solar TSM-290 DD05A.08(II)	
Max. Power-Point Current (Imp)	9.01	Amps
Max. Power-Point Voltage (Vmp)	32.2	Volts
Open-Circuit Voltage (Voc)	39.5	Volts
Short-Circuit Current (Isc)	9.5	Amps
Max. Series Fuse (OCPD)	15	Amps
Nom. Max. Power at STC (Pmax)	290	Watts
Max. System Voltage	1000V DC (IEC)(UL)	
Voc Temperature Coefficient	-0.29	%/C

AC Output Current According to NEC 690.8(B)(1)	21.16	Amps
Nominal AC Voltage	240	Volts
THIS PANEL IS FED BY MULTIPLE SOURCES (UTILITY AND SOLAR)		

Rooftop conductor ampacities designed in compliance with NEC 690.8, Tables 310.15(B)(2)(a), 310.15(B)(3)(a), 310.15(B)(3)(c), 310.15(B)(16), Chapter 9 Table 4, 5, & 9. Loacation specific temperature obtained from ASHRAE 2013 data tables.

ASHRAE 2013 -
Highest Monthly 2% D.B. Design Temp.: 33 °C
Lowest Min. Mean Extreme D.B.: -19.1 °C

Inverter Make/Model	S230-60-LL-2-US	
Max. Dc Volt Rating	48	Volts
Max. Power at 40 C	230	Watts
Nominal AC Voltage	240	Volts
Max. AC Current	0.92	Amps
Max. OCPD Rating	20	Amps
Max. Panels/Circuit	17	
Short Circuit Current	1.05	Amps

Conductor Calculations

- Wire gauge calculated from NEC code 310.15(B)(16) with ambient temperature calculations from NEC 310.15(2)(a).
For "On Roof" conductors we use the 90°C column ampacity, 0.5"-3.5" off-the-roof temperature adjustment from 310.15(B)(3)(c), and raceway fill adjustments from 310.15(B)(16).
For "Off Roof" conductors we use the 75°C column ampacity, or the 90°C column ampacity with the relevant ambient temperature and raceway fill adjustments, whichever is less.
The rating of the conductor after adjustments MUST be greater than, or equal to, the continuous duty uprated output current.
Calculation Example - Wire Rating (90°C) x Ambient Temperature Adjustment x Conduit Fill Adjustment >= Continuous Duty Output Current
(On Roof, Tag 2): 10 gauge wire rated for 40 A, 40 A x 0.76 x 0.8 (4 Conductors) = 24.32 A >= 13.8 A
(Off Roof, Tag 3): 10 gauge wire rated for 35 A, 35 A >= 26.45 A
(Off Roof, Tag 4): 10 gauge wire rated for 35 A, 35 A >= 26.45 A

OCPD Calculations

Breakers sized according to continuous duty output current. PV circuit nominal current based off # of modules per Circuit X (1.25(NEC code 210.19(A)(1)(a) X (.9 Max AC current per micro-inverter)
Circuit #1 = 12 modules, Output Current w/ continuous duty = 13.8 < 20A Breaker
Circuit #2 = 11 modules, Output Current w/ continuous duty = 12.65 < 20A Breaker
system output current w/ continuous duty = 26.45 < 30A (System OCPD)

Other Notes

- All ampacity calculations are made in compliance with NEC 220.5(B)

Joseph Fili Residence
1672 FORGE POND RD
BRICK, NJ 8724
Utility Account:100 084 562 071

vivint.solar

Created: 2/16/17

INSTALLER: VIVINT SOLAR
INSTALLER NUMBER: 1.877.404.4129
NJ LICENSE: 13VH06589300
5421420

SHEET NAME: Notes Page

SHEET NUMBER: E. 2

Enphase **Microinverters**

Enphase **S230**

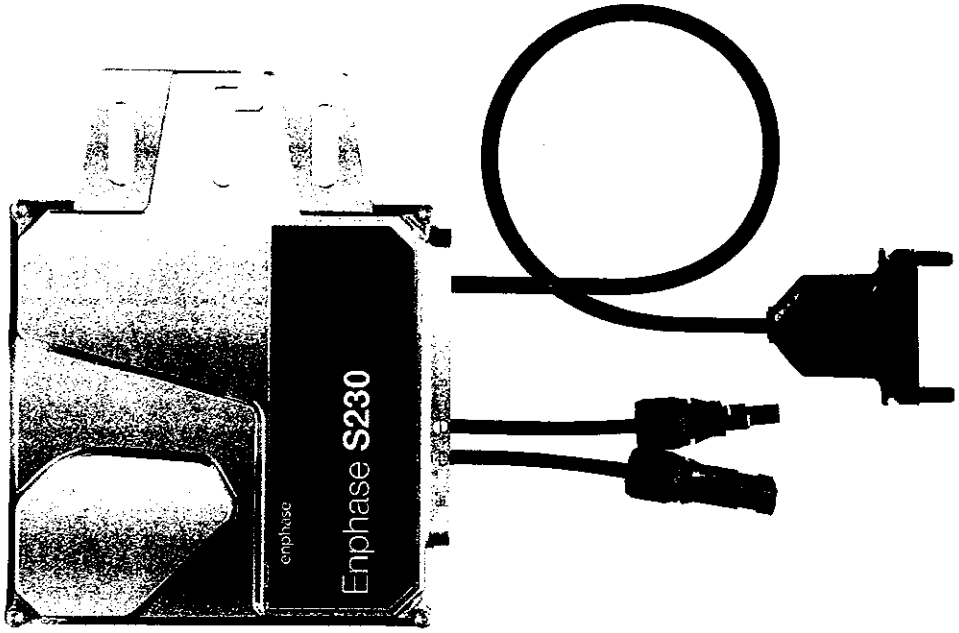

Built on the fifth-generation platform, the Enphase **S230 Microinverter**™ achieves the highest inverter efficiency for module-level power electronics. With its all-AC approach, the S230 simplifies design and installation for 230 VA installations, and delivers optimal energy harvest. The S230 is compatible with storage systems, including battery management systems.

The Enphase S230 integrates seamlessly with the Enphase Envoy-S™ communications gateway, and Enphase Enlighten™ monitoring and analysis software.

PRODUCTIVE

- Maximizes energy production
- Minimizes impact of shading, dust, and debris

SIMPLE AND RELIABLE

- No GEC needed for microinverter
- No DC design or string calculation required
- More than 1 million hours of testing
- Industry-leading warranty, up to 25 years

ADVANCED GRID READY

- Complies with fixed power factor, voltage and frequency ride-through requirements
- Remote updating to respond to changing grid requirements
- Configurable for variable grid profiles like Hawaiian Electric Company (HECO) Rule 14H, California Rule 21

ENPHASE.

C US

INPUT DATA (DC)	S230-60-LL-2-US, S230-60-LL-5-US	
Commonly used module pairings[1]	195 W - 285 W	
Maximum input DC voltage	48 V	
Peak power tracking voltage	27 V - 37 V	
Operating range	16 V - 48 V	
Min/Max start voltage	22 V / 48 V	
Max DC short circuit current	15 A	
INPUT DATA (DC)	**208 VAC**	**240 VAC**
Peak output power	230 VA	230 VA
Maximum continuous output power	220 VA	220 VA
Nominal voltage/range[2]	208 V / 183-229 V	240 V / 211-264 V
Nominal output current	1.06 A	0.92 A
Nominal frequency/range	60 / 57 - 61 Hz	60 / 57 - 61 Hz
Extended frequency range	57 - 63 Hz	57 - 63 Hz
Power factor at rated power	1.0	1.0
Maximum units per 20 A branch circuit	25 (three phase)	17 (single phase)
Maximum output fault current	663 mA rms, 100 ms	663 mA rms, 100 ms
Power factor (adjustable)	1 / 0.7 leading ... 0.7 lagging	1 / 0.7 leading ... 0.7 lagging
EFFICIENCY	**208 VAC**	**240 VAC**
CEC weighted efficiency	96.5 %	97.0 %
Peak inverter efficiency	96.7 %	97.2 %
MECHANICAL DATA		
Ambient temperature range	-40°C to +65°C	
Connector type	S230-60-LN-2-US: MC4 S230-60-LN-5-US: Amphenol H4	
Dimensions (WxHxD)	172 mm x 175 mm x 35 mm (without bracket)	
Weight	1.8 kg (4 lbs)	
Cooling	Natural convection - No fans	
Enclosure environmental rating	Outdoor - NEMA 6	
FEATURES		
Compatibility	60-cell PV modules	
Communication	Power line	
Integrated ground	The DC circuit meets the requirements for ungrounded PV arrays in NEC 690.35. Equipment ground is provided in the Engage Cable. No additional GEC or ground is required. Ground fault protection (GFP) is integrated into the microinverter.	
Monitoring	Enlighten Manager and MyEnlighten monitoring options	
Compliance	UL1741/IEEE1547, FCC Part 15 Class B, CAN/CSA-C22.2 NO. 0-M91, 0.4-04, and 107.1-01	

1. Suggestion only, inverter self limits DC inputs.
2. Nominal voltage range can be extended beyond nominal if required by the utility.

To learn more about Enphase Microinverter technology, visit **enphase.com**

ENPHASE

© 2016 Enphase Energy. All rights reserved. All trademarks or brands in this document are registered by their respective owner.

Enphase **AC Combiner Box**

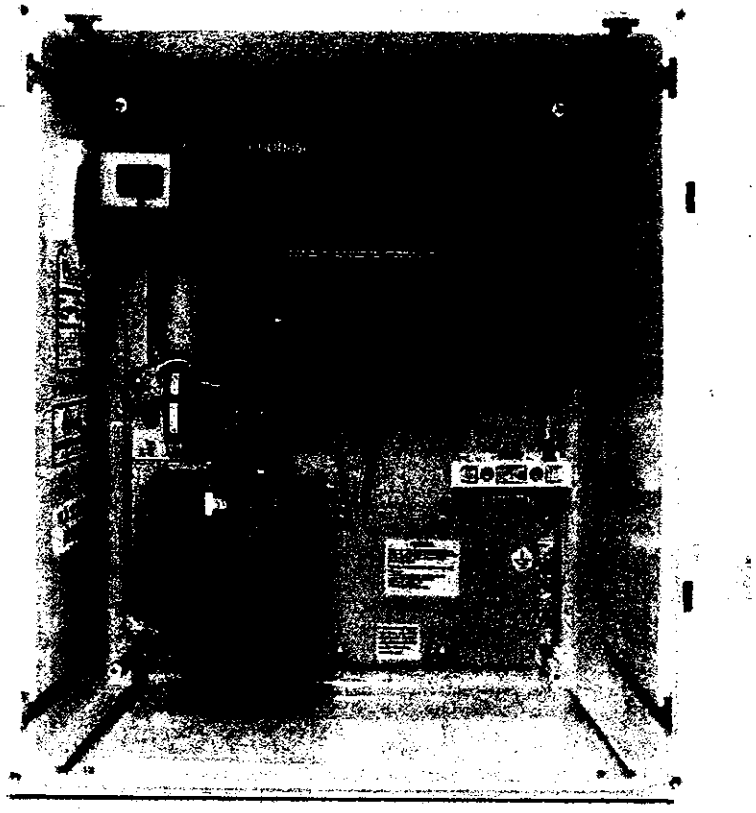

The Enphase® AC Combiner Box with Envoy-S consolidates interconnection equipment into a single enclosure and streamlines PV installations by providing a consistent, pre-wired solution for residential applications.

SMART

- Includes Envoy-S for communication and control
- Flexible networking supports Wi-Fi, Ethernet, or cellular

SIMPLE

- Three pre-installed 20 A / 240 VAC circuit breakers
- Pre-configured revenue-grade metering available

RELIABLE

- Durable NRTL-certified NEMA type 3R enclosure
- Five-year warranty

[e] enphase® ENERGY

UL LISTED

MODEL NUMBER	
AC Combiner Box, Metered XAM1-120	AC combiner with Enphase® Envoy-S Metered for integrated revenue grade PV production metering (ANSI C12.20 +/- 0.5%, **pending**) and optional consumption monitoring (+/- 2.5%).
ACCESSORIES (Order Separately)	
Enphase® Mobile Connect CELLMODEM-01	Plug and play industrial grade cellular modem with five-year data plan for systems up to 12 kW. (Available in the US, Canada, Mexico, Puerto Rico, and the US Virgin Islands, where there is adequate cellular service in the installation area.)
Consumption Monitoring CT CT-200-SPLIT	Split core current transformers enable whole home consumption metering (+/- 2.5%).
ELECTRICAL SPECIFICATIONS	
Maximum system size	11.5 kW at 240 VAC
Rating	Continuous duty
Maximum system voltage	240 VAC
Rated output current	48 A
Rated input current, each input	16 A
Maximum fuse/circuit breaker rating (output)	60 A
Solar branch circuit breakers	Three 2-pole 20A/240 VAC DIN rail-mounted breakers
Production Metering CT	200A solid core pre-installed on solar busbar and wired to Envoy-S
MECHANICAL DATA	
Dimensions (WxHxD)	38.0 x 38.7 x 20.3 cm (15.0" x 15.3" x 8.0")
Weight	5.1 kg (11.2 lbs)
Ambient temperature range	-40° C to +46° C (-40° to 115° F)
Cooling	Vented, natural convection
Enclosure environmental rating	Outdoor, NRTL-certified, NEMA type 3R, polycarbonate construction
Wire size	10 AWG for branch inputs 4 AWG for combined output (3 circuits) 6 AWG for combined output (2 circuits)
Altitude	To 2000 meters (6,560 feet)
INTERNET CONNECTION OPTIONS	
Integrated Wi-Fi	802.11b/g/n
Ethernet	802.3, Cat5E (or Cat 6) UTP Ethernet cable (not included)
Cellular	Optional, CELLMODEM-01 (not included)
COMPLIANCE	
Compliance, Combiner Box	UL 1741
Compliance, Envoy-S	UL 916 CAN/CSA C22.2 No. 61010-1 47 CFR, Part 15, Class B, ICES 003 IEC/EN 61010-1:2010, EN50065-1, EN61000-4-5, EN61000-6-1, EN61000-6-2 Metering: ANSI C12.20 accuracy class 0.5 (**Pending**)

To learn more about Enphase Microinverter technology,
visit enphase.com

[e] enphase® ENERGY

© 2015 Enphase Energy. All rights reserved. All trademarks or brands in this document are registered by their respective owner.

[redacted]

State Of New Jersey
New Jersey Office of the Attorney General
Division of Consumer Affairs

THIS IS TO CERTIFY THAT THE
Board of Exam. of Electrical Contractors

HAS LICENSED

Vivint Solar Developer LLC
MATTHEW K HOFHERR
25 E 7th Street
Clifton NJ 07011

FOR PRACTICE IN NEW JERSEY AS A(N): Electrical Business Permit

PLEASE DETACH HERE
IF YOUR LICENSE/REGISTRATION/ CERTIFICATE ID CARD IS LOST PLEASE NOTIFY:
Board of Exam. of Electrical Contr
P.O. Box 45006
Newark, NJ 07101

06/23/2016 TO 03/31/2018
VALID

Signature of Licensee/Registrant/Certificate Holder

34EB01809700
LICENSE REGISTRATION/CERTIFICATION #

ACTING DIRECTOR

PLEASE DETACH HERE

Vivint Solar Developer LLC
YOUR LICENSE/REGISTRATION/CERTIFICATE NUMBER IS **34EB 01809700** . EXPIRATION DATE **2018**
PLEASE USE IT IN ALL CORRESPONDENCE TO THE DIVISION OF CONSUMER AFFAIRS USE THIS SECTION TO REPORT ADDRESS CHANGES YOU ARE REQUIRED TO REPORT ANY ADDRESS CHANGES IMMEDIATELY TO THE ADDRESS NOTED BELOW

Board of Exam. of Electrical Contractors
P.O. Box 45006
Newark, NJ 07101

PRINT YOUR NEW **ADDRESS OF RECORD** BELOW
YOUR ADDRESS OF RECORD IS THE ADDRESS THAT WILL PRINT ON YOUR LICENSE/REGISTRATION/CERTIFICATE AND IT MAY BE MADE AVAILABLE TO THE PUBLIC

HOME

BUSINESS

TELEPHONE
INCLUDE AREA CODE

PRINT YOUR NEW **MAILING ADDRESS** BELOW
YOUR MAILING ADDRESS IS THE ADDRESS THAT WILL BE USED BY THE DIVISION OF CONSUMER AFFAIRS TO SEND YOU ALL CORRESPONDENCE

HOME

BUSINESS

TELEPHONE
INCLUDE AREA CODE

NOT AN ELECTRICIAN'S OR PLUMBER'S LICENSE

State Of New Jersey
New Jersey Office of the Attorney General
Division of Consumer Affairs

THIS IS TO CERTIFY THAT THE
Division of Consumer Affairs

HAS REGISTERED

Vivint Solar Developer, LLC
Vivint Solar Inc.
3301 N Thanksgiving Way
Suite 500
Lehi UT 84043

FOR PRACTICE IN NEW JERSEY AS A(N): Home Improvement Contractor

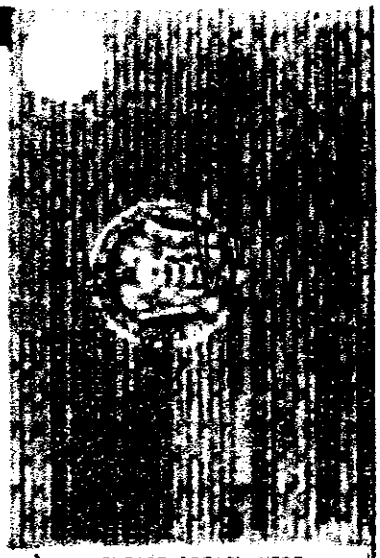

PLEASE DETACH HERE

IF YOUR LICENSE/REGISTRATION/ CERTIFICATE ID CARD IS LOST PLEASE NOTIFY:
Division of Consumer Affairs
P.O. Box 46016
Newark, NJ 07101

02/06/2016 TO 03/31/2017
VALID

Signature of Licensee/Registrant/Certificate Holder

13VH06589300
LICENSE/REGISTRATION/CERTIFICATION #

ACTING DIRECTOR

PLEASE DETACH HERE

Vivint Solar Developer, LLC

EXPIRATION DATE 2017

YOUR LICENSE/REGISTRATION/CERTIFICATE NUMBER IS 13VH 06589300 . PLEASE USE IT IN ALL CORRESPONDENCE TO THE DIVISION OF CONSUMER AFFAIRS USE THIS SECTION TO REPORT ADDRESS CHANGES YOU ARE REQUIRED TO REPORT ANY ADDRESS CHANGES IMMEDIATELY TO THE ADDRESS NOTED BELOW

Division of Consumer Affairs
P.O. Box 46016
Newark, NJ 07101

PRINT YOUR NEW **ADDRESS OF RECORD** BELOW
YOUR ADDRESS OF RECORD IS THE ADDRESS THAT WILL PRINT ON YOUR LICENSE/REGISTRATION/CERTIFICATE AND IT MAY BE MADE AVAILABLE TO THE PUBLIC

HOME

BUSINESS

TELEPHONE
INCLUDE AREA CODE

PRINT YOUR NEW **MAILING ADDRESS** BELOW
YOUR MAILING ADDRESS IS THE ADDRESS THAT WILL BE USED BY THE DIVISION OF CONSUMER AFFAIRS TO SEND YOU ALL CORRESPONDENCE

HOME

BUSINESS

TELEPHONE
INCLUDE AREA CODE