BRICK TOWNSHIP

BLOCK: 1170 **LOT:** 5 **QUAL:** **CLASS:** 4A
LOCATION: 1722 Route 88

OWNER: The Price Company%Tax Dept#229
ADDRESS: 999 Lake Dr
CITY, STATE, ZIP: Issaquan Wa, 98027

LOT SIZE: 14.38 **ZONE:** B3

YEAR BUILT: **MAP:** 61

RECORD OF OWNERSHIP

OWNER	DEED DATE	DATE REC.	BOOK	PAGE	SRIA NO.	USABLE	RATIO	SALE PRICE

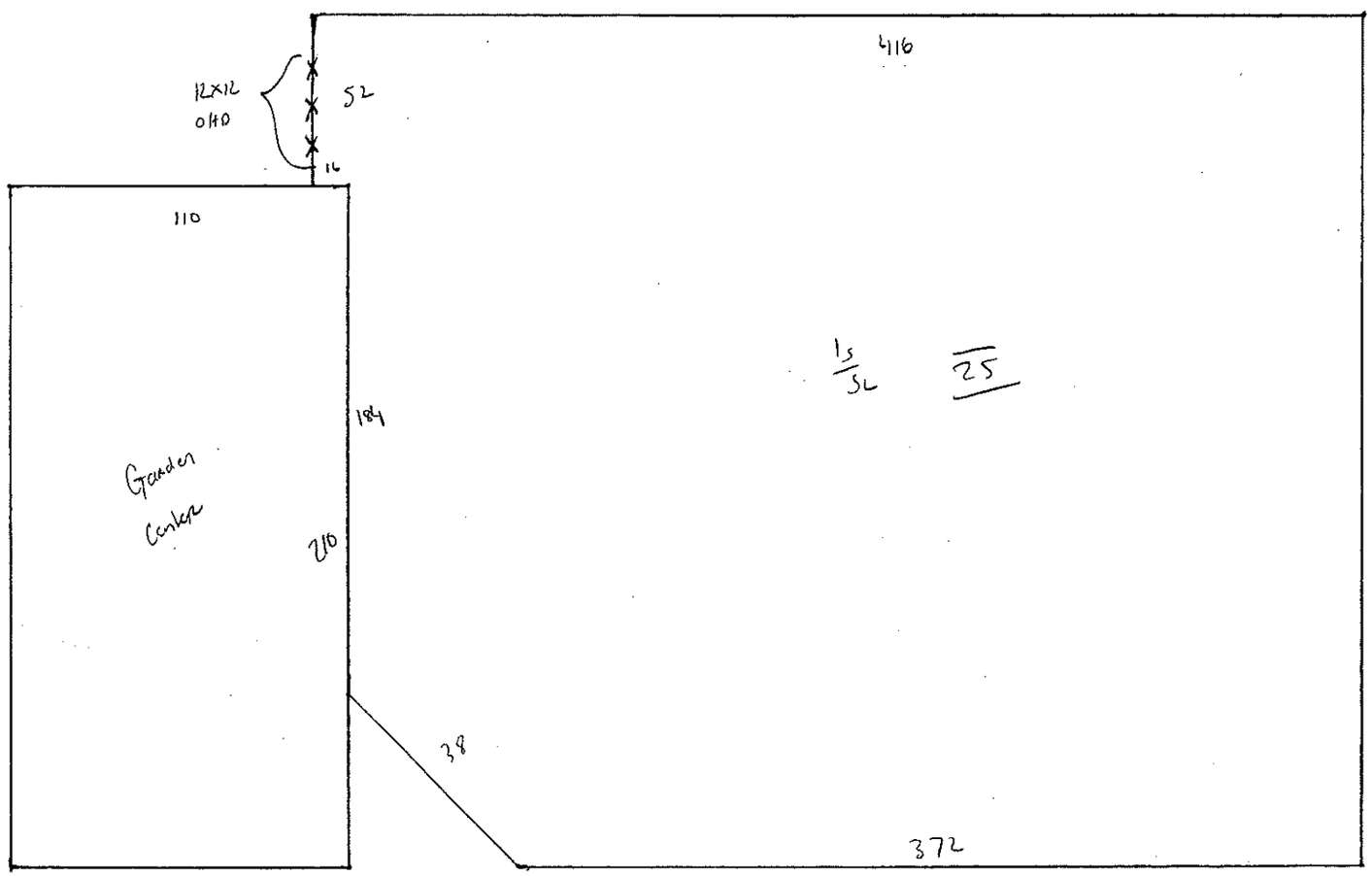

GROSS BUILDING AREA: 127,025 +/-.

GROUND AREA: 127,025 +/-

PERIMETER:

WALL RATIO:

AVERAGE STORY HEIGHT: 25

NOTES:

Future Home Depot
Empty shell
549 Spaces
106,032 # bxce bldg
2,374 # Vestibules
18,619 #. Garden Center
1,800 Outdoor Storage

PRICE CLUB
1SCB

Commercial - Industrial Field Form

FOR USE WITH MARSHALL & SWIFT COMPUTERIZED SERVICE

PHOTOGRAPH

1. COST ESTIMATE FOR:
2. PROPERTY OWNER:
3. BLOCK 1170 LOT: 5 ADDRESS:
4. CARD: 1 OF: 1
5. INSPECTED BY: RL
6. DATE INSPECTED 3-30-09
7. INTERIOR: EXTERIOR: ✓
8. CONSTRUCTION CLASS:
   - A. FIREPROOF STRUCTURAL STEEL FR.
   - B. REINFORCED CONCRETE FRAME
   - ✓ C. MASONRY BEARING WALLS
   - D. WOOD OR STEEL FRAMED EXT. WALL
   - E. METAL FRAME AND WALLS
9. LOCAL MULTIPLIER OR ZIP:
10. COST RANK
    - 1. LOW
    - 3. ABOVE AVG.
    - ✓ 2. AVERAGE
    - 4. HIGH
11. TOTAL FLOOR AREA:
12. SHAPE OR PERIMETER
    - 1. APPROX. Square
    - 3. IRREGULAR
    - ✓ 2. SLIGHTLY IRR.
    - 4. VERY IRR.
13. NUMBER OF STORIES: 1
14. AVG. STORY HEIGHT: 25
15. EFFECTIVE AGE: Ø
16. CONDITION
    - 1. WORN OUT
    - ✓ 4. GOOD
    - 2. BADLY WORN
    - 5. VERY GOOD
    - 3. AVERAGE
    - 6. EXCELLANT
17. EXTERIOR WALL

MASONRY WALL	
1. ADOBE BRICK	8. CONC., TILT-UP
2. BRICK, CB Back-up	9. STONE VENEER
3. BRICK, COMMON	10. STONE, RUB.
4. BRICK, CAVITY	11. PILASTER +
5. FACE BRICK	12. BOND BEAMS +
✓ 6. CONC. BLOCK	13. INSULATION +
7. CONC., REINFOR.	14. STONE FACE +

CURTAIN WALLS	
14. CONC., PRECAST	19. STONE PANELS
15. CONC./GLASS Pan.	20. STEEL STUDS/ST.
16. METAL/GLASS Pan.	21. TILE, CLAY
17. STAIN. Steel/Glass	22. FACING TILE+
23. BRONZE + GLASS	

WOOD or STEEL FRAMED WALLS	
23. ALUM. SIDING	33. FACE BR. VEN.
24. ASBESTOS Siding	34. STONE VENEER
25. ASBESTOS Shingles	35. USED BRICK Ven.
26. SHINGLES	36. SIDING, Vinyl
27. SHAKES	37. SIDING, Hardboard
28. STUCCO on Wire	38. SIDING, Plywood
29. STUCCO on Sheath.	39. BOARD/BATTEN
30. WOOD SIDING	40. LOG, RUSTIC
31. WD. SIDING ON SH.	41. GLASS WALL

17. EXTERIOR WALLS (Cont.)

PRE-ENGINEERED WALLS	
51. STEEL - 2 SIDES	54. ASB. 2 SIDES
52. ALUM. - 2 SIDES	55. STEEL/GYP. BD.
53. GLASS/METAL	

WOOD or STEEL SKELTON FRAMES	
42. ALUM. COVER	46. TRANSITE
44. CORR./STEEL FR.	47. SIDING
45. CORR./WOOD FR.	48. SHEATHING+

18. HEATING, COOLING & VENTILATION

1. ELECTRIC	12. STEAM w/BOILER
2. ELEC. WALL Htrs.	13. STEAM-No BOILER
3. FORCED AIR	14. A/C-HOT/CHWAT.
4. FLOOR FURNACE	15. A/C-WARM/COOL
5. STEAM Radiators	✓ 16. Pkg HEAT & COOL
6. GRAVITY FURN.	17. HEAT PUMP
7. HEATERS, Vented	18. EVAP. COOLING
8. HOT WATER	19. REFRIG. COOLING
9. H.W. - RADIANT	20. VENTILATION
10. SPACE HEAT, GAS	21. WALL FURNACE
11. SPACE Heat Steam	

19. ELEVATORS YES NO
    PASSENGER FREIGHT FLOORS:
20. SPRINKLERS DRY (WET)
    Sq. Ft. Area Served 10090

~~21. BASEMENT~~

1. UNFINISHED	
2. FINISHED	
3. PARKING	
4. STORAGE	
5. UTILITY	
6. RESIDENT UNITS	
7. DISPLAY	
8. OFFICE	

ROOF TYPE

A. HIP	D. GABLE
B. MANSARD	✓ E. FLAT
C. GAMBREL	

ROOF COVER

A. ASHP. SHINGLES	E. SLATE
B. WOOD SHINGLES	F. ROLL
C. COMP SHINGLES	G. TAR & GRAVEL
D. ASBES. SHINGLES	

PLUMBING

A. 3 FIXT BATH	E. STALL SHOWER
B. 2 FIXT BATH	F. URINAL
C. SINK	G. SLOP SINK
D. TOILET	

COST REFINEMENTS	
MEZZANINES	AREA
MZM: DISPLAY	
MZB: OFFICE	
MZC: STORAGE	
MZD: OPEN	
BALCONIES	AREA
BCA: APARTMENT EXTERIOR	
BCD: AUDITORIUM	
BCC: CHURCH	
BCT: THEATER	
DOCKS	AREA
DLR: LOADING WITH ROOF	
DLW: LOADING WITHOUT ROOF	
DOS: SHIPPING	
DOF: DOCK HEIGHT FLOORS	
PARKING LOTS	AREA
(PAS) ASPHALT PARKING	499,368
PCO: CONCRETE PAVING	
LIG: LIGHTING - AREA SERVED	
BUM: PARKING BUMPERS - LIN. FT.	
~~BANK ACCESSORIES~~	AREA
MONEY VAULT	
STORAGE VAULT	
ATM (DRIVE UP / WALK UP)	
PNEUMATIC TUBE SYSTEM	
~~SERVICE STATION~~	AREA
CANOPY	
CAR LIFTS	
GAS PUMPS	
ISLAND	
UNDERGROUND TANKS	
KIOSKS	
ACCESSORY IMPROVEMENTS	

NOTES:

BUILDING PERMITS

SITE

ZONE:

TOPOGRAPHY: level

IMPROVEMENTS

PUBLIC WATER	✓	PRIVATE WELL	
CURBS	✓	PAVED ROAD	✓
UNPAVED ROAD		SIDEWALK	✓
PUBLIC SEWER	✓	SEPTIC TANK	
ELECTRIC	✓	GAS	✓

LANDSCAPING

GOOD | AVG. | ✓ FAIR

PROPERTY USE: Future Home Depot

PERCENTAGE BREAKDOWN:

TENANT INFORMATION

NAME:	LOCATION:

1170 5

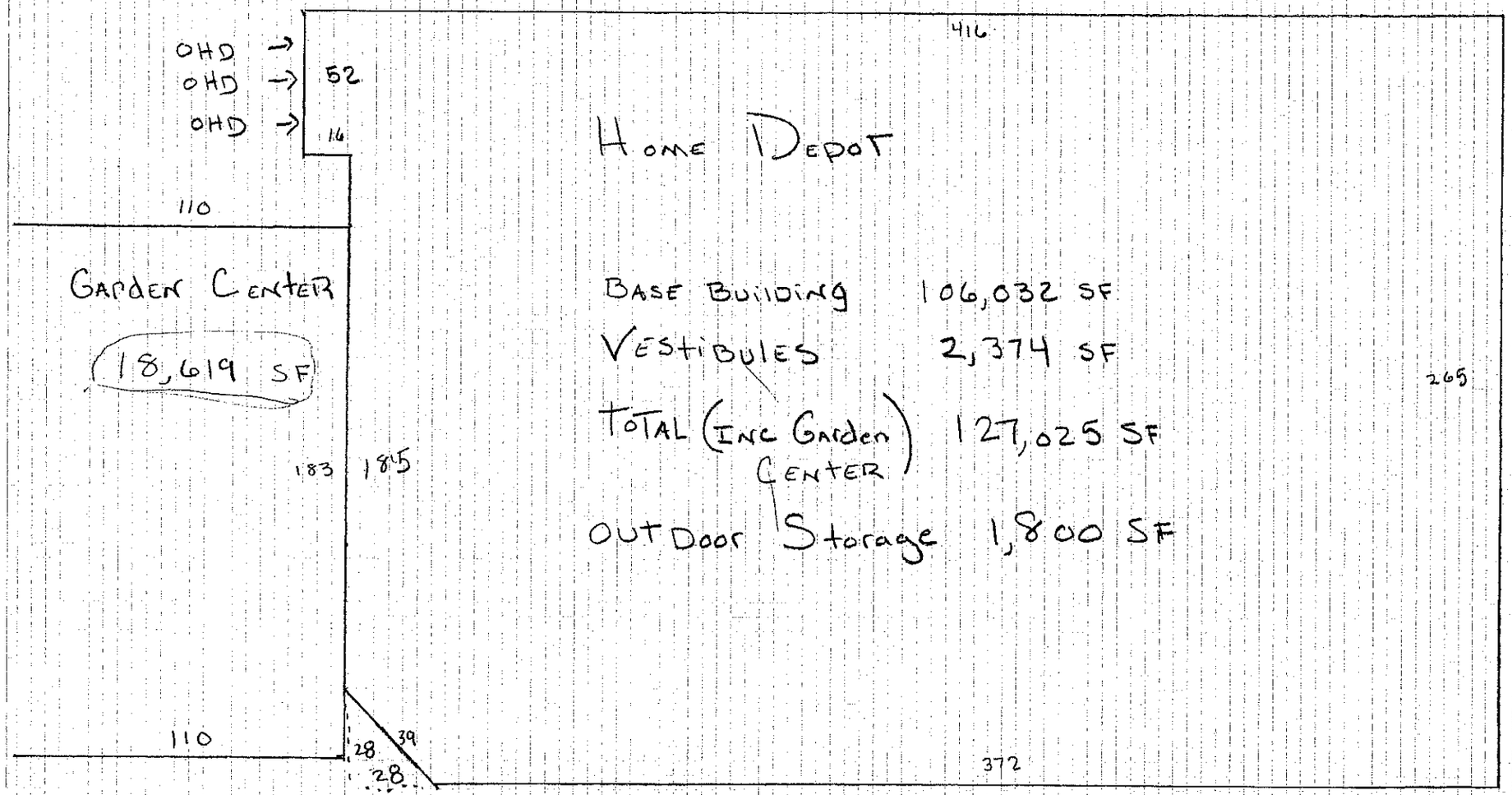

Home Depot

Base Building	106,032 SF
Vestibules	2,374 SF
Total (Inc Garden Center)	127,025 SF
Outdoor Storage	1,800 SF

BRICK TOWNSHIP

BLOCK: 1170 **LOT:** 14.02 **QUAL:** C0001 **CLASS:** 4A
LOCATION: 1640 Route 88 Unit 101

OWNER: Brick Orthopaedic Real Estate Partn
ADDRESS: 1200 Eagle Avenue
CITY, STATE, ZIP: Ocean, Nj, 07712

LOT SIZE: 0.43 **ZONE:** HS

YEAR BUILT: **MAP:** 61

RECORD OF OWNERSHIP

OWNER	DEED DATE	DATE REC.	BOOK	PAGE	SRIA NO.	USABLE	RATIO	SALE PRICE

Master Card:
T = 30458 ✓
G = 15229 ✓
P = 508
R = 29.98
H = 11

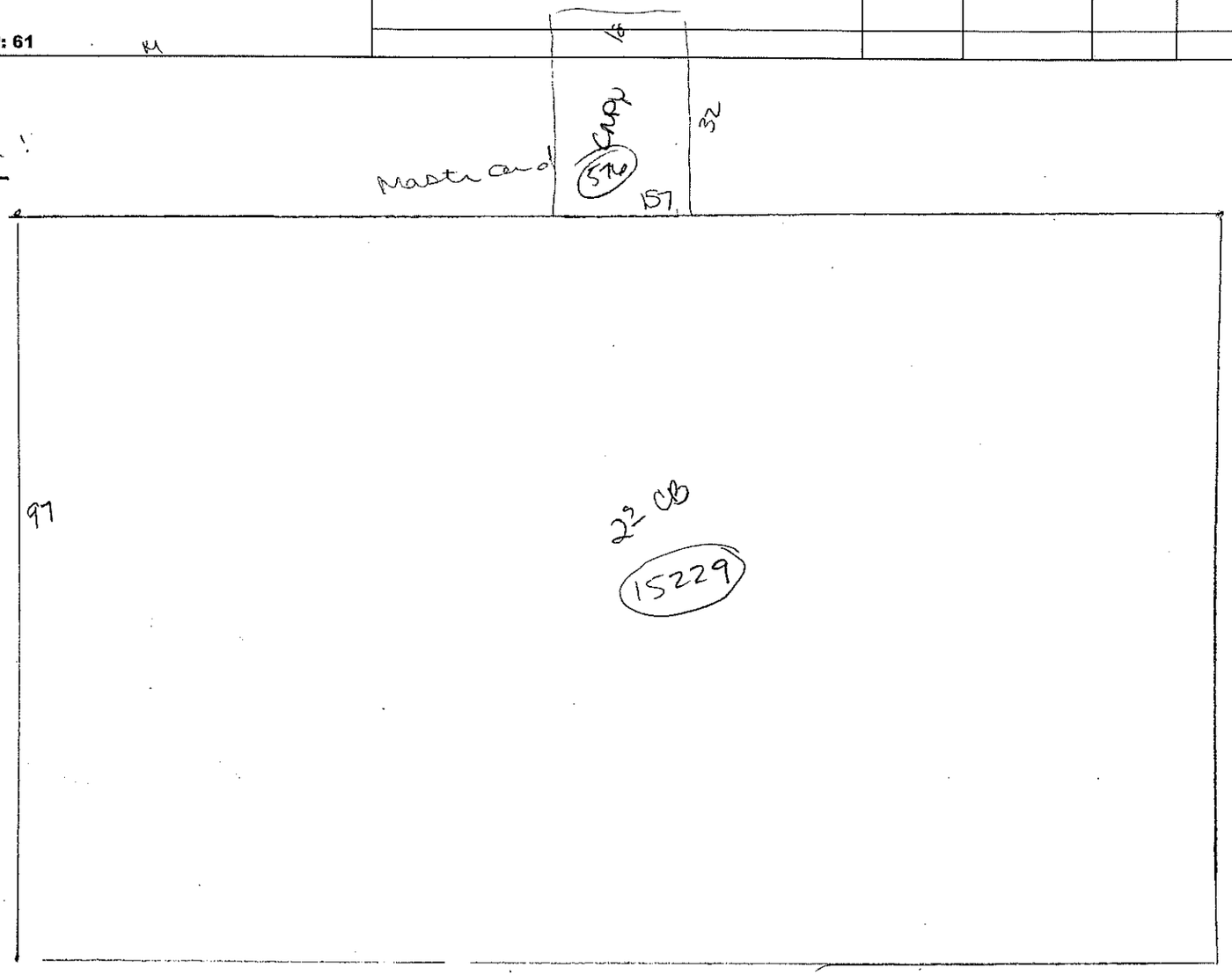

GROSS BUILDING AREA: 30,458

GROUND AREA:

PERIMETER:

WALL RATIO:

AVERAGE STORY HEIGHT:

NOTES:

Seaview orthopaedic & Medical Assoc

OFFICE CON

Commercial - Industrial Field Form

FOR USE WITH MARSHALL & SWIFT COMPUTERIZED SERVICE

PHOTOGRAPH

Ocean Medical Center Dialysis
Shore Cardiology Consultants llc
Atlantic Coast Gastroenterology Assoc
Seaview orthopaedic & Medical Assoc
Shore group

1. COST ESTIMATE FOR:						COST REFINEMENTS	
2. PROPERTY OWNER:						MEZZANINES	AREA
3. BLOCK LOT: ADDRESS:						MZM: DISPLAY	
4. CARD: OF:		17. EXTERIOR WALLS (Cont.)				MZB: OFFICE	
5. INSPECTED BY: JF		PRE-ENGINEERED WALLS				MZC: STORAGE	
6. DATE INSPECTED 5/13/09		51. STEEL - 2 SIDES		54. ASB. 2 SIDES		MZD: OPEN	
7. INTERIOR: X EXTERIOR: X		52. ALUM. - 2 SIDES		55. STEEL/GYP. BD.		BALCONIES	AREA
8. CONSTRUCTION CLASS:		53. GLASS/METAL				BCA: APARTMENT EXTERIOR	
A. FIREPROOF STRUCTURAL STEEL FR.		WOOD or STEEL SKELTON FRAMES				BCD: AUDITORIUM	
B. REINFORCED CONCRETE FRAME		42. ALUM. COVER		46. TRANSITE		BCC: CHURCH	
✓ C. MASONRY BEARING WALLS		44. CORR./STEEL FR.		47. SIDING		BCT: THEATER	
D. WOOD OR STEEL FRAMED EXT. WALL		45. CORR./WOOD FR.		48. SHEATHING+		DOCKS	AREA
E. METAL FRAME AND WALLS		18. HEATING, COOLING & VENTILATION				DLR: LOADING WITH ROOF	
9. LOCAL MULTIPLIER OR ZIP:		1. ELECTRIC		12. STEAM w/BOILER		DLW: LOADING WITHOUT ROOF	
10. COST RANK		2. ELEC. WALL Htrs.		13. STEAM-No BOILER		DOS: SHIPPING	
1. LOW	3. ABOVE AVG.	3. FORCED AIR		14. A/C-HOT/CHWAT.		DOF: DOCK HEIGHT FLOORS	
✓ 2. AVERAGE	4. HIGH	4. FLOOR FURNACE		15. A/C-WARM/COOL		PARKING LOTS	AREA
11. TOTAL FLOOR AREA:		5. STEAM Radiators	✓	16. Pkg HEAT & COOL		PAS: ASPHALT PARKING	90%
12. SHAPE OR PERIMETER		6. GRAVITY FURN.		17. HEAT PUMP		PCO: CONCRETE PAVING	
✓ 1. APPROX. Square	3. IRREGULAR	7. HEATERS, Vented		18. EVAP. COOLING		LIG: LIGHTING - AREA SERVED	
2. SLIGHTLY IRR.	4. VERY IRR.	8. HOT WATER		19. REFRIG. COOLING		BUM: PARKING BUMPERS - LIN. FT.	
13. NUMBER OF STORIES:		9. H.W. - RADIANT		20. VENTILATION		BANK ACCESSORIES	AREA
14. AVG. STORY HEIGHT:		10. SPACE HEAT, GAS		21. WALL FURNACE		MONEY VAULT	
15. EFFECTIVE AGE:		11. SPACE Heat Steam				STORAGE VAULT	
16. CONDITION		19. ELEVATORS		YES	NO	ATM (DRIVE UP / WALK UP)	
1. WORN OUT	4. GOOD	PASSENGER / FREIGHT			FLOORS: 2	PNEUMATIC TUBE SYSTEM	
2. BADLY WORN	5. VERY GOOD	20. SPRINKLERS		DRY	WET	SERVICE STATION	AREA
✓ 3. AVERAGE	6. EXCELLANT	Sq. Ft. Area Served		100		CANOPY	
17. EXTERIOR WALL		21. BASEMENT				CAR LIFTS	
MASONRY WALL		1. UNFINISHED				GAS PUMPS	
1. ADOBE BRICK	8. CONC., TILT-UP	2. FINISHED				ISLAND	
✓ 2. BRICK, CB Back-up	9. STONE VENEER	3. PARKING				UNDERGROUND TANKS	
3. BRICK, COMMON	10. STONE, RUB.	4. STORAGE				KIOSKS	
4. BRICK, CAVITY	11. PILASTER +	5. UTILITY				ACCESSORY IMPROVEMENTS	
5. FACE BRICK	12. BOND BEAMS +	6. RESIDENT UNITS					
6. CONC. BLOCK	13. INSULATION +	7. DISPLAY					
7. CONC., REINFOR.	14. STONE FACE +	8. OFFICE					
CURTAIN WALLS		ROOF TYPE					
14. CONC., PRECAST	19. STONE PANELS	A. HIP		✓ D. GABLE			
15. CONC./GLASS Pan.	20. STEEL STUDS/ST.	B. MANSARD		E. FLAT			
16. METAL/GLASS Pan.	21. TILE, CLAY	C. GAMBREL					
17. STAIN. Steel/Glass	22. FACING TILE+	ROOF COVER					
23. BRONZE + GLASS		A. ASHP. SHINGLES		E. SLATE		NOTES:	
WOOD or STEEL FRAMED WALLS		B. WOOD SHINGLES		F. ROLL			
23. ALUM. SIDING	33. FACE BR. VEN.	C. COMP SHINGLES		G. TAR & GRAVEL			
24. ASBESTOS Siding	34. STONE VENEER	D. ASBES. SHINGLES					
25. ASBESTOS Shingles	35. USED BRICK Ven.	PLUMBING					
26. SHINGLES	36. SIDING, Vinyl	A. 3 FIXT BATH		E. STALL SHOWER			
27. SHAKES	37. SIDING, Hardboard	B. 2 FIXT BATH		F. URINAL			
28. STUCCO on Wire	38. SIDING, Plywood	C. SINK		G. SLOP SINK			
29. STUCCO on Sheath.	39. BOARD/BATTEN	D. TOILET					
30. WOOD SIDING	40. LOG, RUSTIC						
31. WD. SIDING ON SH.	41. GLASS WALL						

BUILDING PERMITS	SITE		
	ZONE:		
	TOPOGRAPHY: level		
	IMPROVEMENTS		
	PUBLIC WATER	✓	PRIVATE WELL
	CURBS	✓	PAVED ROAD ✓
	UNPAVED ROAD		SIDEWALK ✓
	PUBLIC SEWER	✓	SEPTIC TANK
	ELECTRIC		GAS ✓
	LANDSCAPING		
	GOOD	AVG.	✓ FAIR

PROPERTY USE: Medical Office 100%

PERCENTAGE BREAKDOWN:

TENANT INFORMATION

NAME:	LOCATION:

BRICK TOWNSHIP

BLOCK: 1170 **LOT:** 14.02 **QUAL:** C0002 **CLASS:** 4A
LOCATION: 1640 Route 88 Unit 102

OWNER: Meridian Health Realty Corp
ADDRESS: 81 Davis Avenue
CITY, STATE, ZIP: Neptune, Nj, 07753

LOT SIZE: 1.01 **ZONE:** HS

YEAR BUILT: **MAP:** 61

RECORD OF OWNERSHIP

OWNER	DEED DATE	DATE REC.	BOOK	PAGE	SRIA NO.	USABLE	RATIO	SALE PRICE
	5/26/2004		12110	1850		3		$2,182,699

GROSS BUILDING AREA:

GROUND AREA:

PERIMETER:

WALL RATIO:

AVERAGE STORY HEIGHT:

NOTES:

Ocean Med. center
Dialysis

BRICK TOWNSHIP

BLOCK: 1170 LOT: 14.02 QUAL: C0003 CLASS: 4A
LOCATION: 1640 Route 88 Unit 201

OWNER: Moosvi, Llc
ADDRESS: 1640 Route 88 #201
CITY, STATE, ZIP: Brick Nj, 08724

LOT SIZE: 0.58 ZONE: HS

YEAR BUILT: MAP: 61

RECORD OF OWNERSHIP

OWNER	DEED DATE	DATE REC.	BOOK	PAGE	SRIA NO.	USABLE	RATIO	SALE PRICE

GROSS BUILDING AREA:

GROUND AREA:

PERIMETER:

WALL RATIO:

AVERAGE STORY HEIGHT:

NOTES:

2nd floor
Shore cardiology

OFFICE CON

Commercial - Industrial Field Form

FOR USE WITH MARSHALL & SWIFT COMPUTERIZED SERVICE

PHOTOGRAPH

1. COST ESTIMATE FOR:
2. PROPERTY OWNER:
3. BLOCK LOT: ADDRESS:
4. CARD: OF:
5. INSPECTED BY:
6. DATE INSPECTED
7. INTERIOR: EXTERIOR:
8. CONSTRUCTION CLASS:
   - A. FIREPROOF STRUCTURAL STEEL FR.
   - B. REINFORCED CONCRETE FRAME
   - C. MASONRY BEARING WALLS
   - D. WOOD OR STEEL FRAMED EXT. WALL
   - E. METAL FRAME AND WALLS
9. LOCAL MULTIPLIER OR ZIP:
10. COST RANK
    - 1. LOW
    - 2. AVERAGE
    - 3. ABOVE AVG.
    - 4. HIGH
11. TOTAL FLOOR AREA:
12. SHAPE OR PERIMETER
    - 1. APPROX. Square
    - 2. SLIGHTLY IRR.
    - 3. IRREGULAR
    - 4. VERY IRR.
13. NUMBER OF STORIES:
14. AVG. STORY HEIGHT:
15. EFFECTIVE AGE:
16. CONDITION
    - 1. WORN OUT
    - 2. BADLY WORN
    - 3. AVERAGE
    - 4. GOOD
    - 5. VERY GOOD
    - 6. EXCELLANT
17. EXTERIOR WALL

MASONRY WALL

- 1. ADOBE BRICK
- 2. BRICK, CB Back-up
- 3. BRICK, COMMON
- 4. BRICK, CAVITY
- 5. FACE BRICK
- 6. CONC. BLOCK
- 7. CONC., REINFOR.
- 8. CONC., TILT-UP
- 9. STONE VENEER
- 10. STONE, RUB.
- 11. PILASTER +
- 12. BOND BEAMS +
- 13. INSULATION +
- 14. STONE FACE +

CURTAIN WALLS

- 14. CONC., PRECAST
- 15. CONC./GLASS Pan.
- 16. METAL/GLASS Pan.
- 17. STAIN. Steel/Glass
- 19. STONE PANELS
- 20. STEEL STUDS/ST.
- 21. TILE, CLAY
- 22. FACING TILE+
- 23. BRONZE + GLASS

WOOD or STEEL FRAMED WALLS

- 23. ALUM. SIDING
- 24. ASBESTOS Siding
- 25. ASBESTOS Shingles
- 26. SHINGLES
- 27. SHAKES
- 28. STUCCO on Wire
- 29. STUCCO on Sheath.
- 30. WOOD SIDING
- 31. WD. SIDING ON SH.
- 33. FACE BR. VEN.
- 34. STONE VENEER
- 35. USED BRICK Ven.
- 36. SIDING, Vinyl
- 37. SIDING, Hardboard
- 38. SIDING, Plywood
- 39. BOARD/BATTEN
- 40. LOG, RUSTIC
- 41. GLASS WALL

17. EXTERIOR WALLS (Cont.)

PRE-ENGINEERED WALLS

- 51. STEEL - 2 SIDES
- 52. ALUM. - 2 SIDES
- 53. GLASS/METAL
- 54. ASB. 2 SIDES
- 55. STEEL/GYP. BD.

WOOD or STEEL SKELTON FRAMES

- 42. ALUM. COVER
- 44. CORR./STEEL FR.
- 45. CORR./WOOD FR.
- 46. TRANSITE
- 47. SIDING
- 48. SHEATHING+

18. HEATING, COOLING & VENTILATION

- 1. ELECTRIC
- 2. ELEC. WALL Htrs.
- 3. FORCED AIR
- 4. FLOOR FURNACE
- 5. STEAM Radiators
- 6. GRAVITY FURN.
- 7. HEATERS, Vented
- 8. HOT WATER
- 9. H.W. - RADIANT
- 10. SPACE HEAT, GAS
- 11. SPACE Heat Steam
- 12. STEAM w/BOILER
- 13. STEAM-No BOILER
- 14. A/C-HOT/CHWAT.
- 15. A/C-WARM/COOL
- 16. Pkg HEAT & COOL
- 17. HEAT PUMP
- 18. EVAP. COOLING
- 19. REFRIG. COOLING
- 20. VENTILATION
- 21. WALL FURNACE

19. ELEVATORS YES NO

PASSENGER FREIGHT FLOORS:

20. SPRINKLERS DRY WET

Sq. Ft. Area Served

21. BASEMENT

- 1. UNFINISHED
- 2. FINISHED
- 3. PARKING
- 4. STORAGE
- 5. UTILITY
- 6. RESIDENT UNITS
- 7. DISPLAY
- 8. OFFICE

ROOF TYPE

- A. HIP
- B. MANSARD
- C. GAMBREL
- D. GABLE
- E. FLAT

ROOF COVER

- A. ASHP. SHINGLES
- B. WOOD SHINGLES
- C. COMP SHINGLES
- D. ASBES. SHINGLES
- E. SLATE
- F. ROLL
- G. TAR & GRAVEL

PLUMBING

- A. 3 FIXT BATH
- B. 2 FIXT BATH
- C. SINK
- D. TOILET
- E. STALL SHOWER
- F. URINAL
- G. SLOP SINK

COST REFINEMENTS	
MEZZANINES	AREA
MZM: DISPLAY	
MZB: OFFICE	
MZC: STORAGE	
MZD: OPEN	
BALCONIES	AREA
BCA: APARTMENT EXTERIOR	
BCD: AUDITORIUM	
BCC: CHURCH	
BCT: THEATER	
DOCKS	AREA
DLR: LOADING WITH ROOF	
DLW: LOADING WITHOUT ROOF	
DOS: SHIPPING	
DOF: DOCK HEIGHT FLOORS	
PARKING LOTS	AREA
PAS: ASPHALT PARKING	
PCO: CONCRETE PAVING	
LIG: LIGHTING - AREA SERVED	
BUM: PARKING BUMPERS - LIN. FT.	
BANK ACCESSORIES	AREA
MONEY VAULT	
STORAGE VAULT	
ATM (DRIVE UP / WALK UP)	
PNEUMATIC TUBE SYSTEM	
SERVICE STATION	AREA
CANOPY	
CAR LIFTS	
GAS PUMPS	
ISLAND	
UNDERGROUND TANKS	
KIOSKS	
ACCESSORY IMPROVEMENTS	

NOTES:

BUILDING PERMITS

SITE

ZONE:

TOPOGRAPHY:

IMPROVEMENTS

PUBLIC WATER		PRIVATE WELL	
CURBS		PAVED ROAD	
UNPAVED ROAD		SIDEWALK	
PUBLIC SEWER		SEPTIC TANK	
ELECTRIC		GAS	

LANDSCAPING

GOOD | AVG. | FAIR

PROPERTY USE:

PERCENTAGE BREAKDOWN:

TENANT INFORMATION

NAME:	LOCATION:

BRICK TOWNSHIP

BLOCK: 1170 **LOT:** 14.02 **QUAL:** C0004 **CLASS:** 4A
LOCATION: 1640 Route 88 Unit 202

OWNER: Bbs Associates Llc
ADDRESS: 1640 Route 88 #202
CITY, STATE, ZIP: Brick Nj, 08724

LOT SIZE: 0.52 **ZONE:** HS

YEAR BUILT: **MAP:** 61

RECORD OF OWNERSHIP

OWNER	DEED DATE	DATE REC.	BOOK	PAGE	SRIA NO.	USABLE	RATIO	SALE PRICE

GROSS BUILDING AREA:

GROUND AREA:

PERIMETER:

WALL RATIO:

AVERAGE STORY HEIGHT:

NOTES:

2nd floor
Atlantic Coast
Gastroenterology Assoc

OFFICE CON

Commercial - Industrial Field Form

FOR USE WITH MARSHALL & SWIFT COMPUTERIZED SERVICE

PHOTOGRAPH

1. COST ESTIMATE FOR:
2. PROPERTY OWNER:
3. BLOCK LOT: ADDRESS:
4. CARD: OF:
5. INSPECTED BY:
6. DATE INSPECTED
7. INTERIOR: EXTERIOR:
8. CONSTRUCTION CLASS:
   - A. FIREPROOF STRUCTURAL STEEL FR.
   - B. REINFORCED CONCRETE FRAME
   - C. MASONRY BEARING WALLS
   - D. WOOD OR STEEL FRAMED EXT. WALL
   - E. METAL FRAME AND WALLS
9. LOCAL MULTIPLIER OR ZIP:
10. COST RANK
    - 1. LOW
    - 2. AVERAGE
    - 3. ABOVE AVG.
    - 4. HIGH
11. TOTAL FLOOR AREA:
12. SHAPE OR PERIMETER
    - 1. APPROX. Square
    - 2. SLIGHTLY IRR.
    - 3. IRREGULAR
    - 4. VERY IRR.
13. NUMBER OF STORIES:
14. AVG. STORY HEIGHT:
15. EFFECTIVE AGE:
16. CONDITION
    - 1. WORN OUT
    - 2. BADLY WORN
    - 3. AVERAGE
    - 4. GOOD
    - 5. VERY GOOD
    - 6. EXCELLANT
17. EXTERIOR WALL

MASONRY WALL

- 1. ADOBE BRICK
- 2. BRICK, CB Back-up
- 3. BRICK, COMMON
- 4. BRICK, CAVITY
- 5. FACE BRICK
- 6. CONC. BLOCK
- 7. CONC., REINFOR.
- 8. CONC., TILT-UP
- 9. STONE VENEER
- 10. STONE, RUB.
- 11. PILASTER +
- 12. BOND BEAMS +
- 13. INSULATION +
- 14. STONE FACE +

CURTAIN WALLS

- 14. CONC., PRECAST
- 15. CONC./GLASS Pan.
- 16. METAL/GLASS Pan.
- 17. STAIN. Steel/Glass
- 23. BRONZE + GLASS
- 19. STONE PANELS
- 20. STEEL STUDS/ST.
- 21. TILE, CLAY
- 22. FACING TILE+

WOOD or STEEL FRAMED WALLS

- 23. ALUM. SIDING
- 24. ASBESTOS Siding
- 25. ASBESTOS Shingles
- 26. SHINGLES
- 27. SHAKES
- 28. STUCCO on Wire
- 29. STUCCO on Sheath.
- 30. WOOD SIDING
- 31. WD. SIDING ON SH.
- 33. FACE BR. VEN.
- 34. STONE VENEER
- 35. USED BRICK Ven.
- 36. SIDING, Vinyl
- 37. SIDING, Hardboard
- 38. SIDING, Plywood
- 39. BOARD/BATTEN
- 40. LOG, RUSTIC
- 41. GLASS WALL

17. EXTERIOR WALLS (Cont.)

PRE-ENGINEERED WALLS

- 51. STEEL - 2 SIDES
- 52. ALUM. - 2 SIDES
- 53. GLASS/METAL
- 54. ASB. 2 SIDES
- 55. STEEL/GYP. BD.

WOOD or STEEL SKELTON FRAMES

- 42. ALUM. COVER
- 44. CORR./STEEL FR.
- 45. CORR./WOOD FR.
- 46. TRANSITE
- 47. SIDING
- 48. SHEATHING+

18. HEATING, COOLING & VENTILATION

- 1. ELECTRIC
- 2. ELEC. WALL Htrs.
- 3. FORCED AIR
- 4. FLOOR FURNACE
- 5. STEAM Radiators
- 6. GRAVITY FURN.
- 7. HEATERS, Vented
- 8. HOT WATER
- 9. H.W. - RADIANT
- 10. SPACE HEAT, GAS
- 11. SPACE Heat Steam
- 12. STEAM w/BOILER
- 13. STEAM-No BOILER
- 14. A/C-HOT/CHWAT.
- 15. A/C-WARM/COOL
- 16. Pkg HEAT & COOL
- 17. HEAT PUMP
- 18. EVAP. COOLING
- 19. REFRIG. COOLING
- 20. VENTILATION
- 21. WALL FURNACE

19. ELEVATORS YES NO

PASSENGER FREIGHT FLOORS:

20. SPRINKLERS DRY WET

Sq. Ft. Area Served

21. BASEMENT

- 1. UNFINISHED
- 2. FINISHED
- 3. PARKING
- 4. STORAGE
- 5. UTILITY
- 6. RESIDENT UNITS
- 7. DISPLAY
- 8. OFFICE

ROOF TYPE

- A. HIP
- B. MANSARD
- C. GAMBREL
- D. GABLE
- E. FLAT

ROOF COVER

- A. ASHP. SHINGLES
- B. WOOD SHINGLES
- C. COMP SHINGLES
- D. ASBES. SHINGLES
- E. SLATE
- F. ROLL
- G. TAR & GRAVEL

PLUMBING

- A. 3 FIXT BATH
- B. 2 FIXT BATH
- C. SINK
- D. TOILET
- E. STALL SHOWER
- F. URINAL
- G. SLOP SINK

COST REFINEMENTS	
MEZZANINES	AREA
MZM: DISPLAY	
MZB: OFFICE	
MZC: STORAGE	
MZD: OPEN	
BALCONIES	AREA
BCA: APARTMENT EXTERIOR	
BCD: AUDITORIUM	
BCC: CHURCH	
BCT: THEATER	
DOCKS	AREA
DLR: LOADING WITH ROOF	
DLW: LOADING WITHOUT ROOF	
DOS: SHIPPING	
DOF: DOCK HEIGHT FLOORS	
PARKING LOTS	AREA
PAS: ASPHALT PARKING	
PCO: CONCRETE PAVING	
LIG: LIGHTING - AREA SERVED	
BUM: PARKING BUMPERS - LIN. FT.	
BANK ACCESSORIES	AREA
MONEY VAULT	
STORAGE VAULT	
ATM (DRIVE UP / WALK UP)	
PNEUMATIC TUBE SYSTEM	
SERVICE STATION	AREA
CANOPY	
CAR LIFTS	
GAS PUMPS	
ISLAND	
UNDERGROUND TANKS	
KIOSKS	
ACCESSORY IMPROVEMENTS	

NOTES:

BUILDING PERMITS

SITE

ZONE:

TOPOGRAPHY:

IMPROVEMENTS

PUBLIC WATER		PRIVATE WELL	
CURBS		PAVED ROAD	
UNPAVED ROAD		SIDEWALK	
PUBLIC SEWER		SEPTIC TANK	
ELECTRIC		GAS	

LANDSCAPING

GOOD AVG. FAIR

PROPERTY USE:

PERCENTAGE BREAKDOWN:

TENANT INFORMATION

NAME:	LOCATION:

BRICK TOWNSHIP

BLOCK: 1170 **LOT:** 14.02 **QUAL:** C0005 **CLASS:** 4A
LOCATION: 1640 Route 88 Unit 203

OWNER: Jarahian, Llc
ADDRESS: 1640 Route 88 Unit 203
CITY, STATE, ZIP: Brick Nj, 08724

LOT SIZE: 0.37 **ZONE:** HS

YEAR BUILT: **MAP:** 61

RECORD OF OWNERSHIP

OWNER	DEED DATE	DATE REC.	BOOK	PAGE	SRIA NO.	USABLE	RATIO	SALE PRICE

GROSS BUILDING AREA:

GROUND AREA:

PERIMETER:

WALL RATIO:

AVERAGE STORY HEIGHT:

NOTES:

2nd - floor

store group

OFFICE CON

Commercial - Industrial Field Form

FOR USE WITH MARSHALL & SWIFT COMPUTERIZED SERVICE

PHOTOGRAPH

1. COST ESTIMATE FOR:
2. PROPERTY OWNER:
3. BLOCK LOT: ADDRESS:
4. CARD: OF:
5. INSPECTED BY:
6. DATE INSPECTED
7. INTERIOR: EXTERIOR:
8. CONSTRUCTION CLASS:
   - A. FIREPROOF STRUCTURAL STEEL FR.
   - B. REINFORCED CONCRETE FRAME
   - C. MASONRY BEARING WALLS
   - D. WOOD OR STEEL FRAMED EXT. WALL
   - E. METAL FRAME AND WALLS
9. LOCAL MULTIPLIER OR ZIP:
10. COST RANK
    - 1. LOW
    - 2. AVERAGE
    - 3. ABOVE AVG.
    - 4. HIGH
11. TOTAL FLOOR AREA:
12. SHAPE OR PERIMETER
    - 1. APPROX. Square
    - 2. SLIGHTLY IRR.
    - 3. IRREGULAR
    - 4. VERY IRR.
13. NUMBER OF STORIES:
14. AVG. STORY HEIGHT:
15. EFFECTIVE AGE:
16. CONDITION
    - 1. WORN OUT
    - 2. BADLY WORN
    - 3. AVERAGE
    - 4. GOOD
    - 5. VERY GOOD
    - 6. EXCELLANT
17. EXTERIOR WALL

MASONRY WALL

- 1. ADOBE BRICK
- 2. BRICK, CB Back-up
- 3. BRICK, COMMON
- 4. BRICK, CAVITY
- 5. FACE BRICK
- 6. CONC. BLOCK
- 7. CONC., REINFOR.
- 8. CONC., TILT-UP
- 9. STONE VENEER
- 10. STONE, RUB.
- 11. PILASTER +
- 12. BOND BEAMS +
- 13. INSULATION +
- 14. STONE FACE +

CURTAIN WALLS

- 14. CONC., PRECAST
- 15. CONC./GLASS Pan.
- 16. METAL/GLASS Pan.
- 17. STAIN. Steel/Glass
- 23. BRONZE + GLASS
- 19. STONE PANELS
- 20. STEEL STUDS/ST.
- 21. TILE, CLAY
- 22. FACING TILE+

WOOD or STEEL FRAMED WALLS

- 23. ALUM. SIDING
- 24. ASBESTOS Siding
- 25. ASBESTOS Shingles
- 26. SHINGLES
- 27. SHAKES
- 28. STUCCO on Wire
- 29. STUCCO on Sheath.
- 30. WOOD SIDING
- 31. WD. SIDING ON SH.
- 33. FACE BR. VEN.
- 34. STONE VENEER
- 35. USED BRICK Ven.
- 36. SIDING, Vinyl
- 37. SIDING, Hardboard
- 38. SIDING, Plywood
- 39. BOARD/BATTEN
- 40. LOG, RUSTIC
- 41. GLASS WALL

17. EXTERIOR WALLS (Cont.)

PRE-ENGINEERED WALLS

- 51. STEEL - 2 SIDES
- 52. ALUM. - 2 SIDES
- 53. GLASS/METAL
- 54. ASB. 2 SIDES
- 55. STEEL/GYP. BD.

WOOD or STEEL SKELTON FRAMES

- 42. ALUM. COVER
- 44. CORR./STEEL FR.
- 45. CORR./WOOD FR.
- 46. TRANSITE
- 47. SIDING
- 48. SHEATHING+

18. HEATING, COOLING & VENTILATION

- 1. ELECTRIC
- 2. ELEC. WALL Htrs.
- 3. FORCED AIR
- 4. FLOOR FURNACE
- 5. STEAM Radiators
- 6. GRAVITY FURN.
- 7. HEATERS, Vented
- 8. HOT WATER
- 9. H.W. - RADIANT
- 10. SPACE HEAT, GAS
- 11. SPACE Heat Steam
- 12. STEAM w/BOILER
- 13. STEAM-No BOILER
- 14. A/C-HOT/CHWAT.
- 15. A/C-WARM/COOL
- 16. Pkg HEAT & COOL
- 17. HEAT PUMP
- 18. EVAP. COOLING
- 19. REFRIG. COOLING
- 20. VENTILATION
- 21. WALL FURNACE

19. ELEVATORS YES NO

PASSENGER FREIGHT FLOORS:

20. SPRINKLERS DRY WET

Sq. Ft. Area Served

21. BASEMENT

- 1. UNFINISHED
- 2. FINISHED
- 3. PARKING
- 4. STORAGE
- 5. UTILITY
- 6. RESIDENT UNITS
- 7. DISPLAY
- 8. OFFICE

ROOF TYPE

- A. HIP
- B. MANSARD
- C. GAMBREL
- D. GABLE
- E. FLAT

ROOF COVER

- A. ASHP. SHINGLES
- B. WOOD SHINGLES
- C. COMP SHINGLES
- D. ASBES. SHINGLES
- E. SLATE
- F. ROLL
- G. TAR & GRAVEL

PLUMBING

- A. 3 FIXT BATH
- B. 2 FIXT BATH
- C. SINK
- D. TOILET
- E. STALL SHOWER
- F. URINAL
- G. SLOP SINK

COST REFINEMENTS	
MEZZANINES	AREA
MZM: DISPLAY	
MZB: OFFICE	
MZC: STORAGE	
MZD: OPEN	
BALCONIES	AREA
BCA: APARTMENT EXTERIOR	
BCD: AUDITORIUM	
BCC: CHURCH	
BCT: THEATER	
DOCKS	AREA
DLR: LOADING WITH ROOF	
DLW: LOADING WITHOUT ROOF	
DOS: SHIPPING	
DOF: DOCK HEIGHT FLOORS	
PARKING LOTS	AREA
PAS: ASPHALT PARKING	
PCO: CONCRETE PAVING	
LIG: LIGHTING - AREA SERVED	
BUM: PARKING BUMPERS - LIN. FT.	
BANK ACCESSORIES	AREA
MONEY VAULT	
STORAGE VAULT	
ATM (DRIVE UP / WALK UP)	
PNEUMATIC TUBE SYSTEM	
SERVICE STATION	AREA
CANOPY	
CAR LIFTS	
GAS PUMPS	
ISLAND	
UNDERGROUND TANKS	
KIOSKS	
ACCESSORY IMPROVEMENTS	

NOTES:

BUILDING PERMITS

SITE

ZONE:

TOPOGRAPHY:

IMPROVEMENTS

PUBLIC WATER		PRIVATE WELL	
CURBS		PAVED ROAD	
UNPAVED ROAD		SIDEWALK	
PUBLIC SEWER		SEPTIC TANK	
ELECTRIC		GAS	

LANDSCAPING

GOOD | AVG. | FAIR

PROPERTY USE:

PERCENTAGE BREAKDOWN:

TENANT INFORMATION

NAME:	LOCATION:

BRICK TOWNSHIP

BLOCK: 547 **LOT:** 1 **QUAL:** **CLASS:** 4A
LOCATION: 545 Brick Blvd.

OWNER: Collective Fed Svgs %B Of America
ADDRESS: 101 N.Tryon;Nc1-001-03-81
CITY, STATE, ZIP: Charlotte, Nc, 28255

LOT SIZE: 1.50 **ZONE:** B2

YEAR BUILT: **MAP:** 35.10

RECORD OF OWNERSHIP

OWNER	DEED DATE	DATE REC.	BOOK	PAGE	SRIA NO.	USABLE	RATIO	SALE PRICE

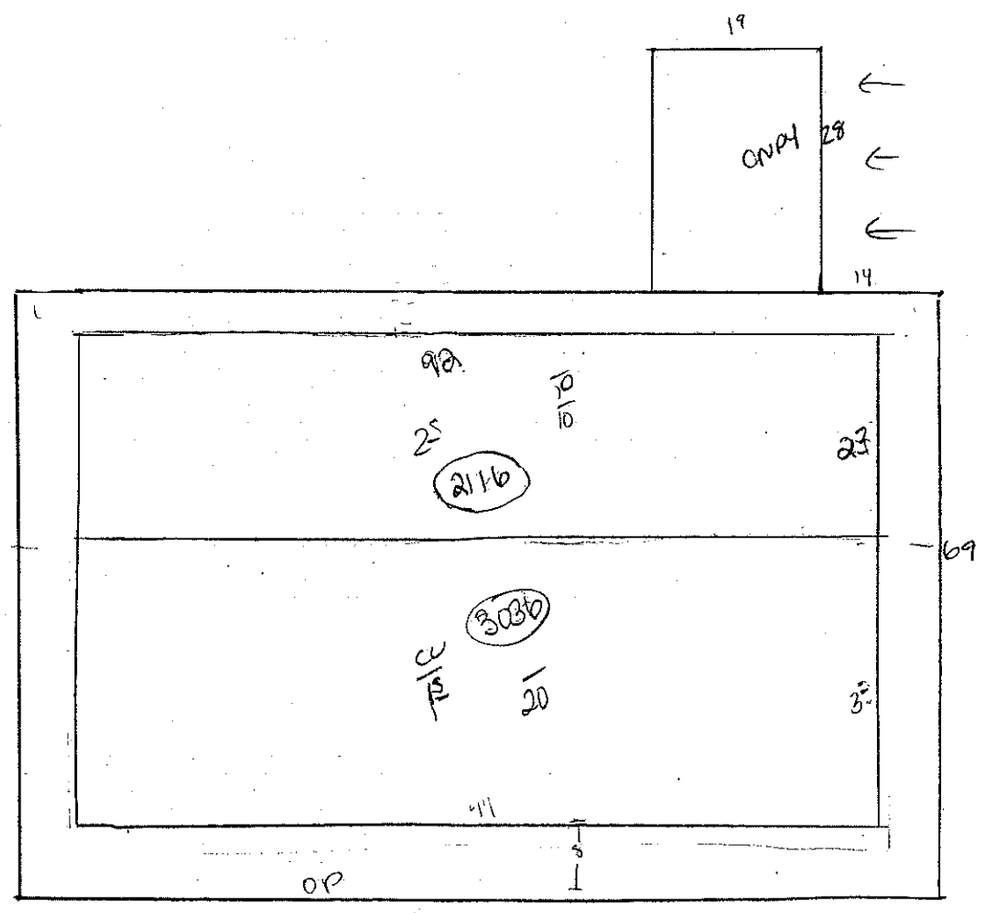

GROSS BUILDING AREA: 7268

GROUND AREA: 5152

PERIMETER: 296

WALL RATIO: 17.41

AVERAGE STORY HEIGHT: 15

NOTES:

Bank of America

2116
× 2
4232
+ 3036
8

BANK OF AMERICA
2SRC 7244

Commercial - Industrial Field Form

FOR USE WITH MARSHALL & SWIFT COMPUTERIZED SERVICE

PHOTOGRAPH

1. COST ESTIMATE FOR:
2. PROPERTY OWNER:
3. BLOCK LOT: ADDRESS:
4. CARD: OF:
5. INSPECTED BY: JF
6. DATE INSPECTED 7/8/08
7. INTERIOR: X EXTERIOR: X
8. CONSTRUCTION CLASS:
   - A. FIREPROOF STRUCTURAL STEEL FR.
   - B. REINFORCED CONCRETE FRAME
   - / C. MASONRY BEARING WALLS
   - D. WOOD OR STEEL FRAMED EXT. WALL
   - E. METAL FRAME AND WALLS
9. LOCAL MULTIPLIER OR ZIP:
10. COST RANK
    - 1. LOW
    - 3. ABOVE AVG.
    - / 2. AVERAGE
    - 4. HIGH
11. TOTAL FLOOR AREA:
12. SHAPE OR PERIMETER
    - / 1. APPROX. Square
    - 3. IRREGULAR
    - 2. SLIGHTLY IRR.
    - 4. VERY IRR.
13. NUMBER OF STORIES:
14. AVG. STORY HEIGHT:
15. EFFECTIVE AGE: 2
16. CONDITION
    - 1. WORN OUT
    - 4. GOOD
    - 2. BADLY WORN
    - 5. VERY GOOD
    - / 3. AVERAGE
    - 6. EXCELLANT
17. EXTERIOR WALL

MASONRY WALL	
1. ADOBE BRICK	8. CONC., TILT-UP
2. BRICK, CB Back-up	9. STONE VENEER
3. BRICK, COMMON	10. STONE, RUB.
4. BRICK, CAVITY	11. PILASTER +
5. FACE BRICK	12. BOND BEAMS +
/ 6. CONC. BLOCK	13. INSULATION +
7. CONC., REINFOR.	14. STONE FACE +

CURTAIN WALLS	
14. CONC., PRECAST	19. STONE PANELS
15. CONC./GLASS Pan.	20. STEEL STUDS/ST.
16. METAL/GLASS Pan.	21. TILE, CLAY
17. STAIN. Steel/Glass	22. FACING TILE+
23. BRONZE + GLASS	

WOOD or STEEL FRAMED WALLS	
23. ALUM. SIDING	33. FACE BR. VEN.
24. ASBESTOS Siding	34. STONE VENEER
25. ASBESTOS Shingles	35. USED BRICK Ven.
26. SHINGLES	36. SIDING, Vinyl
27. SHAKES	37. SIDING, Hardboard
/ 28. STUCCO on Wire	38. SIDING, Plywood
29. STUCCO on Sheath.	39. BOARD/BATTEN
30. WOOD SIDING	40. LOG, RUSTIC
31. WD. SIDING ON SH.	41. GLASS WALL

17. EXTERIOR WALLS (Cont.)

PRE-ENGINEERED WALLS	
51. STEEL - 2 SIDES	54. ASB. 2 SIDES
52. ALUM. - 2 SIDES	55. STEEL/GYP. BD.
53. GLASS/METAL	

WOOD or STEEL SKELTON FRAMES	
42. ALUM. COVER	46. TRANSITE
44. CORR./STEEL FR.	47. SIDING
45. CORR./WOOD FR.	48. SHEATHING+

18. HEATING, COOLING & VENTILATION

1. ELECTRIC	12. STEAM w/BOILER
2. ELEC. WALL Htrs.	13. STEAM-No BOILER
3. FORCED AIR	14. A/C-HOT/CHWAT.
4. FLOOR FURNACE	/ 15. A/C-WARM/COOL
5. STEAM Radiators	/ 16. Pkg HEAT & COOL
6. GRAVITY FURN.	17. HEAT PUMP
7. HEATERS, Vented	18. EVAP. COOLING
8. HOT WATER	19. REFRIG. COOLING
9. H.W. - RADIANT	20. VENTILATION
10. SPACE HEAT, GAS	21. WALL FURNACE
11. SPACE Heat Steam	

19. ELEVATORS YES NO
    PASSENGER FREIGHT FLOORS:
20. SPRINKLERS DRY (WET)
    Sq. Ft. Area Served
21. BASEMENT
    - 1. UNFINISHED
    - / 2. FINISHED
    - 3. PARKING
    - 4. STORAGE
    - 5. UTILITY
    - 6. RESIDENT UNITS
    - 7. DISPLAY
    - 8. OFFICE

ROOF TYPE

A. HIP	D. GABLE
B. MANSARD	/ E. FLAT
C. GAMBREL	

ROOF COVER

A. ASHP. SHINGLES	E. SLATE
B. WOOD SHINGLES	F. ROLL
C. COMP SHINGLES	G. TAR & GRAVEL
D. ASBES. SHINGLES	

PLUMBING

A. 3 FIXT BATH	E. STALL SHOWER
B. 2 FIXT BATH	F. URINAL
C. SINK	G: SLOP SINK
D. TOILET	

COST REFINEMENTS	
MEZZANINES	AREA
MZM: DISPLAY	
MZB: OFFICE	
MZC: STORAGE	
MZD: OPEN	
BALCONIES	AREA
BCA: APARTMENT EXTERIOR	
BCD: AUDITORIUM	
BCC: CHURCH	
BCT: THEATER	
DOCKS	AREA
DLR: LOADING WITH ROOF	
DLW: LOADING WITHOUT ROOF	
DOS: SHIPPING	
DOF: DOCK HEIGHT FLOORS	
PARKING LOTS	AREA
PAS: ASPHALT PARKING	70
PCO: CONCRETE PAVING	
LIG: LIGHTING - AREA SERVED	
BUM: PARKING BUMPERS - LIN. FT.	
BANK ACCESSORIES	AREA
MONEY VAULT	10'
STORAGE VAULT	
ATM (DRIVE UP / (WALK UP))	1
PNEUMATIC TUBE SYSTEM 2 tubes + 1 wm	
SERVICE STATION	AREA
CANOPY	
CAR LIFTS	
GAS PUMPS	
ISLAND	
UNDERGROUND TANKS	
KIOSKS	
ACCESSORY IMPROVEMENTS	

NOTES:

BUILDING PERMITS

SITE

ZONE:
TOPOGRAPHY: level

IMPROVEMENTS

PUBLIC WATER	/	PRIVATE WELL	
CURBS	/	PAVED ROAD	/
UNPAVED ROAD		SIDEWALK	/
PUBLIC SEWER	/	SEPTIC TANK	/
ELECTRIC	/	GAS	/

LANDSCAPING

GOOD	AVG.	/ FAIR

PROPERTY USE: Bank 100%

PERCENTAGE BREAKDOWN:

TENANT INFORMATION

NAME:	LOCATION:

547 / 1

132

132
x 132

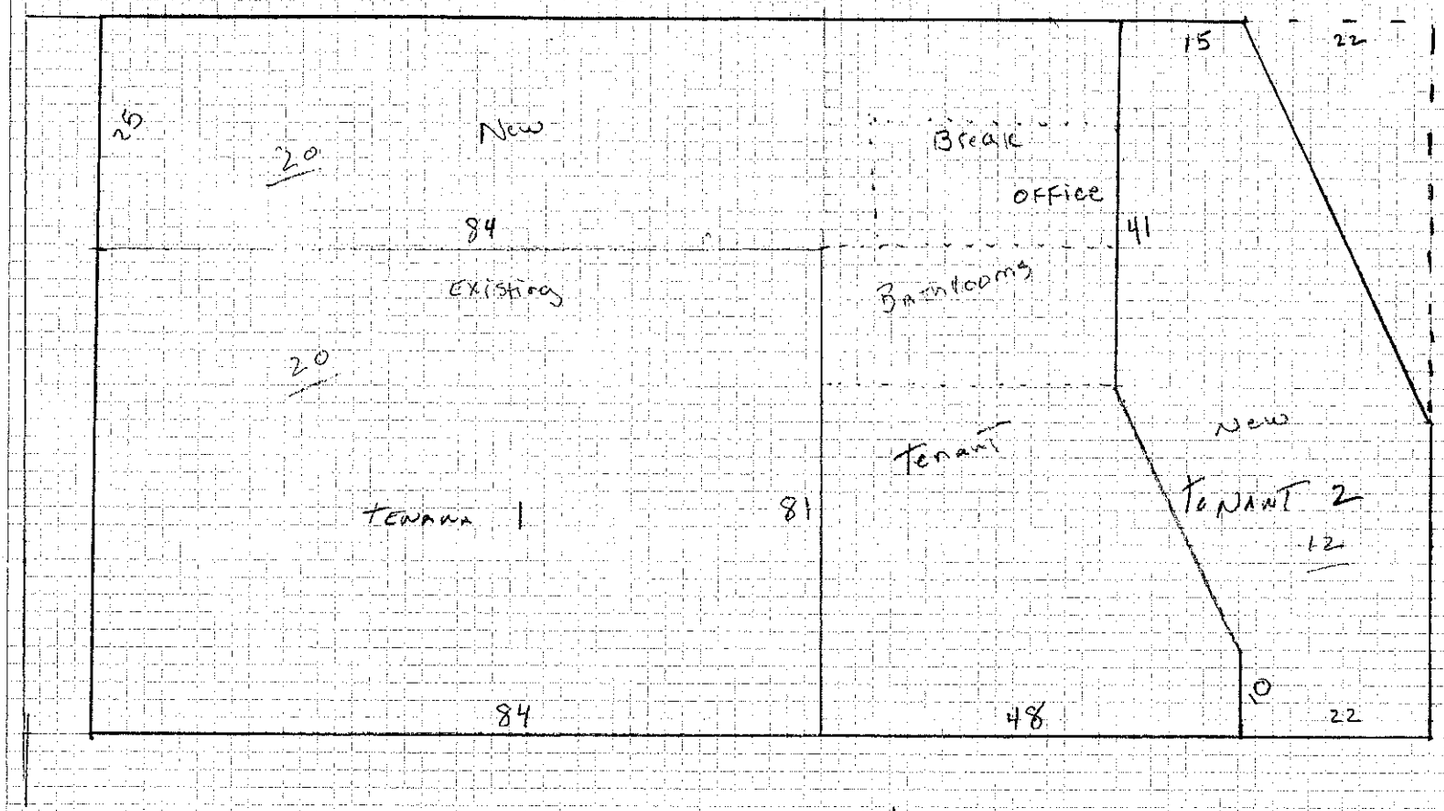

154

Tenant 1 - 10,000
Tenant 2 - 2,068
Total - 12,068

Tenant 1 10,000 # Tenant 2 2,068 #

BRICK TOWNSHIP

BLOCK: 854 **LOT:** 2 **QUAL:** **CLASS:** 4A
LOCATION: 849 Route 70

OWNER: Evangelistra Partners
ADDRESS: 849 Route 70
CITY, STATE, ZIP: Brick, Nj, 08724

LOT SIZE: 0.86 **ZONE:** B3

YEAR BUILT: **MAP:** 46

RECORD OF OWNERSHIP

OWNER	DEED DATE	DATE REC.	BOOK	PAGE	SRIA NO.	USABLE	RATIO	SALE PRICE

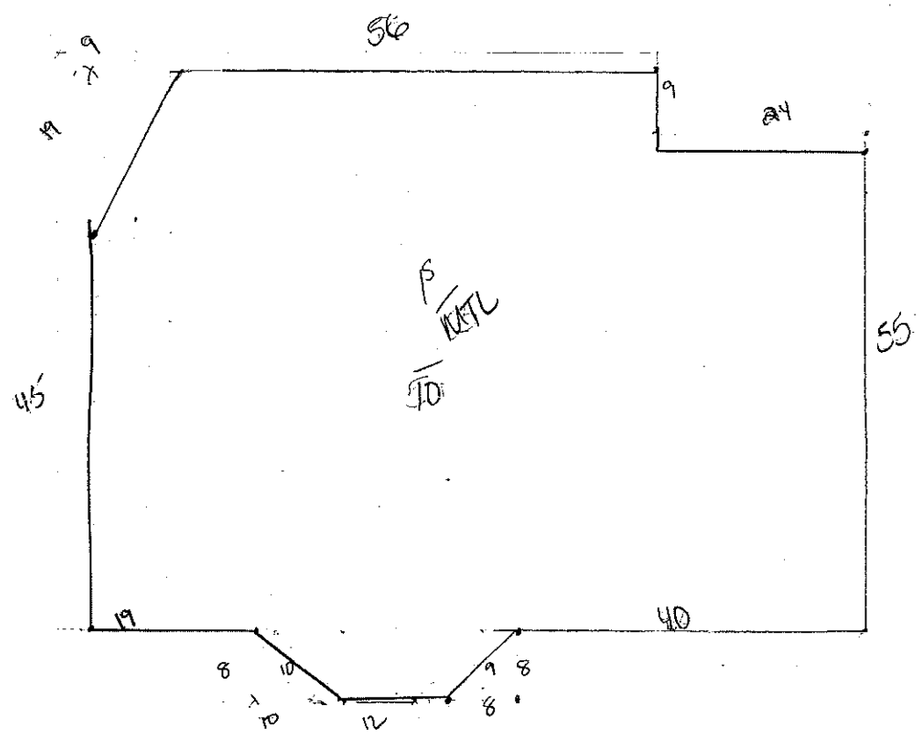

GROSS BUILDING AREA: 5555

GROUND AREA: 5555

PERIMETER: 298

WALL RATIO: 18.64

AVERAGE STORY HEIGHT: 10

NOTES:

Rainbow Diner

RAINBOW DINER
1SM 5420

Commercial - Industrial Field Form

FOR USE WITH MARSHALL & SWIFT COMPUTERIZED SERVICE

PHOTOGRAPH

1. COST ESTIMATE FOR:
2. PROPERTY OWNER:
3. BLOCK LOT: ADDRESS:
4. CARD: OF:
5. INSPECTED BY: JF
6. DATE INSPECTED 6/18/08
7. INTERIOR: X EXTERIOR: X
8. CONSTRUCTION CLASS:
   - A. FIREPROOF STRUCTURAL STEEL FR.
   - B. REINFORCED CONCRETE FRAME
   - C. MASONRY BEARING WALLS
   - D. WOOD OR STEEL FRAMED EXT. WALL
   - E. METAL FRAME AND WALLS
9. LOCAL MULTIPLIER OR ZIP:
10. COST RANK
    - 1. LOW
    - 2. AVERAGE
    - 3. ABOVE AVG.
    - 4. HIGH
11. TOTAL FLOOR AREA:
12. SHAPE OR PERIMETER
    - 1. APPROX. Square
    - 2. SLIGHTLY IRR.
    - 3. IRREGULAR
    - 4. VERY IRR.
13. NUMBER OF STORIES: 1
14. AVG. STORY HEIGHT: 10
15. EFFECTIVE AGE: 10
16. CONDITION
    - 1. WORN OUT
    - 2. BADLY WORN
    - 3. AVERAGE
    - 4. GOOD
    - 5. VERY GOOD
    - 6. EXCELLANT
17. EXTERIOR WALL

MASONRY WALL

- 1. ADOBE BRICK
- 2. BRICK, CB Back-up
- 3. BRICK, COMMON
- 4. BRICK, CAVITY
- 5. FACE BRICK
- 6. CONC. BLOCK
- 7. CONC., REINFOR.
- 8. CONC., TILT-UP
- 9. STONE VENEER
- 10. STONE, RUB.
- 11. PILASTER +
- 12. BOND BEAMS +
- 13. INSULATION +
- 14. STONE FACE +

CURTAIN WALLS

- 14. CONC., PRECAST
- 15. CONC./GLASS Pan.
- 16. METAL/GLASS Pan.
- 17. STAIN. Steel/Glass
- 19. STONE PANELS
- 20. STEEL STUDS/ST.
- 21. TILE, CLAY
- 22. FACING TILE+
- 23. BRONZE + GLASS

WOOD or STEEL FRAMED WALLS

- 23. ALUM. SIDING
- 24. ASBESTOS Siding
- 25. ASBESTOS Shingles
- 26. SHINGLES
- 27. SHAKES
- 28. STUCCO on Wire
- 29. STUCCO on Sheath.
- 30. WOOD SIDING
- 31. WD. SIDING ON SH.
- 33. FACE BR. VEN.
- 34. STONE VENEER
- 35. USED BRICK Ven.
- 36. SIDING, Vinyl
- 37. SIDING, Hardboard
- 38. SIDING, Plywood
- 39. BOARD/BATTEN
- 40. LOG, RUSTIC
- 41. GLASS WALL

17. EXTERIOR WALLS (Cont.)

PRE-ENGINEERED WALLS

- 51. STEEL - 2 SIDES
- 52. ALUM. - 2 SIDES
- 53. GLASS/METAL
- 54. ASB. 2 SIDES
- 55. STEEL/GYP. BD.

WOOD or STEEL SKELTON FRAMES

- 42. ALUM. COVER
- 44. CORR./STEEL FR.
- 45. CORR./WOOD FR.
- 46. TRANSITE
- 47. SIDING
- 48. SHEATHING+

18. HEATING, COOLING & VENTILATION

- 1. ELECTRIC
- 2. ELEC. WALL Htrs.
- 3. FORCED AIR
- 4. FLOOR FURNACE
- 5. STEAM Radiators
- 6. GRAVITY FURN.
- 7. HEATERS, Vented
- 8. HOT WATER
- 9. H.W. - RADIANT
- 10. SPACE HEAT, GAS
- 11. SPACE Heat Steam
- 12. STEAM w/BOILER
- 13. STEAM-No BOILER
- 14. A/C-HOT/CHWAT.
- 15. A/C-WARM/COOL
- 16. Pkg HEAT & COOL
- 17. HEAT PUMP
- 18. EVAP. COOLING
- 19. REFRIG. COOLING
- 20. VENTILATION
- 21. WALL FURNACE

19. ELEVATORS YES NO

PASSENGER FREIGHT FLOORS:

20. SPRINKLERS DRY WET

Sq. Ft. Area Served

21. BASEMENT

- 1. UNFINISHED
- 2. FINISHED
- 3. PARKING
- 4. STORAGE
- 5. UTILITY
- 6. RESIDENT UNITS
- 7. DISPLAY
- 8. OFFICE

ROOF TYPE

- A. HIP
- B. MANSARD
- C. GAMBREL
- D. GABLE
- E. FLAT

ROOF COVER

- A. ASHP. SHINGLES
- B. WOOD SHINGLES
- C. COMP SHINGLES
- D. ASBES. SHINGLES
- E. SLATE
- F. ROLL
- G. TAR & GRAVEL

PLUMBING

- A. 3 FIXT BATH
- B. 2 FIXT BATH
- C. SINK
- D. TOILET
- E. STALL SHOWER
- F. URINAL
- G. SLOP SINK

COST REFINEMENTS	
MEZZANINES	AREA
MZM: DISPLAY	
MZB: OFFICE	
MZC: STORAGE	
MZD: OPEN	
BALCONIES	AREA
BCA: APARTMENT EXTERIOR	
BCD: AUDITORIUM	
BCC: CHURCH	
BCT: THEATER	
DOCKS	AREA
DLR: LOADING WITH ROOF	
DLW: LOADING WITHOUT ROOF	
DOS: SHIPPING	
DOF: DOCK HEIGHT FLOORS	
PARKING LOTS	AREA
PAS: ASPHALT PARKING	80
PCO: CONCRETE PAVING	
LIG: LIGHTING - AREA SERVED	
BUM: PARKING BUMPERS - LIN. FT.	
BANK ACCESSORIES	AREA
MONEY VAULT	
STORAGE VAULT	
ATM (DRIVE UP / WALK UP)	
PNEUMATIC TUBE SYSTEM	
SERVICE STATION	AREA
CANOPY	
CAR LIFTS	
GAS PUMPS	
ISLAND	
UNDERGROUND TANKS	
KIOSKS	
ACCESSORY IMPROVEMENTS	

NOTES:

BUILDING PERMITS

SITE

ZONE:

TOPOGRAPHY: level

IMPROVEMENTS

PUBLIC WATER		PRIVATE WELL	
CURBS		PAVED ROAD	✓
UNPAVED ROAD		SIDEWALK	✓
PUBLIC SEWER		SEPTIC TANK	
ELECTRIC		GAS	✓

LANDSCAPING

GOOD		AVG.		FAIR	

PROPERTY USE: Diner 100%

PERCENTAGE BREAKDOWN:

TENANT INFORMATION

NAME:	LOCATION:

BLOCK 670 LOT 10.01 QUAL ADDL LOTS VCS C4

PROP LOC 2700 HOOPER AVE.
TAX MAP
ZONING
PROP CLS 4A
LAND DES .5900AC
BLDG DES 1SF

SALPIETRO, GIUSEPPE & VITTORIA
1842 BEACH BLVD.
PT.PLEASANT, NJ 08742

	CURRENT	1ST PREV	2ND PREV	VAL	IVAL
SALE HIST					
SALE DATE					
SALE PRICE					

CURRENT ASSESSED -	
LAND VAL	63,500
IMPR VAL	107,550
TOTL VAL	171,050

50.00 NEIGHBORHOOD
- ✓ 01 TYPICAL
- 02 INFERIOR
- 03 SUPERIOR
- 04 STABLE
- 05 DECLINING
- 06 IMPROVING
- 07 RURAL
- 08 CROSSROADS
- 09 SUBURBAN
- 10 URBAN
- 11 SUBDIVISION
- 12 MIXED

51.00 VIEW
- ✓ 01 TYPICAL
- 02 DETRIMENTAL
- 03 ENHANCING
- 04 LAKE VIEW

52.00 UTILITIES
- ✓ 01 ALL
- 02 ELECTRIC
- 03 GAS
- 04 WATER
- 05 SEWER
- 06 WELL
- 07 SEPTIC
- 08 SUMP/SEW CONN
- 09 SUMP/NO SEW
- 90 NONE

53.00 INFO. BY
- ✓ 01 OWNER
- 02 SPOUSE
- 03 TENANT
- 04 AGENT
- 05 AT DOOR
- 06 REFUSED
- 07 ESTIMATED

54.00 ROAD QF
- ✓ 01 PAVED
- 02 GRAVEL
- 03 DIRT
- 04 PRIVATE
- 90 NONE

55.00 CURBING QF
- ✓ 01 YES
- 90 NONE

56.00 SIDEWALK QF
- ✓ 01 YES
- 90 NONE

62.00 LAND COND.
- 01 NO RGHT TO BLDG
- 02 ALLEY SHAPE
- 03 FLAG LOT
- 04 SEVERE EASEMNTS
- 05 UNIMPV ROAD
- 06 SLOPE
- 07 LAND LOCKED
- 08 FLOOD PLAIN
- 09 SHARED DRIVEWAY
- 10 POOR LOCATION
- 11 TOPOGRAPHY
- 12 TRIANGLE
- 13 IRREGULAR
- 14
- 15

61.00 MARKET INFLUENCE
- 01 OVERBUILT
- 02 UNDERIMPROVED
- 03 POOR LAYOUT
- 04 NEXT COMM.
- 05 TRANSITIONAL
- 06 NO PARKING
- 07 POOR STYLE
- 08 NO GARAGE
- 09 INDUS. LOC.
- 10 POWER LINES
- 11 NO STR. LIGHT
- 12 INFERIOR SERV
- ✓ 13 SUPERIOR SERV
- ✓ 14 HEAVY TRAFFIC
- 15 LIGHT TRAFFIC
- 16 UNDERGRD UTIL
- 17 FUNC OBSOL.
- 18 ECON OBSOL.

63.00 LAND INFLUENCE
- 01 COMMERCIAL
- 02 VIEW
- 03 MISC.
- 04
- 05
- 06
- 07
- 08
- 09
- 10
- 11
- 12
- 13
- 14
- 15
- 16

15.00 ACCESSARY & FARM BUILDINGS

CODE	SIZE/AREA	QUALITY FACTOR	NET CONDITION	FIELD PRICE

CODE LEGEND:

01=DET. GARAGE	09=POOL VINYL	17=FARM SHED
02=DET. CARPORT	10=POOL ABV GRND	18=POLE BARN
03=SHED 1 STORY	11=C.C. PAVING	19=STABLE
04=SHED 1.5 STY	12=ASPHALT PAVING	20=POULTRY SHED
05=SHED 2 STORY	13=TENNIS COURT	21=SILO
06=FIN SHED 1STY	14=BARN	22=SMALL SHED
07=FIN SHED 1.5S	15=DAIRY BARN	23=
08=POOL GUNITE	16=BARN W/LOFT	24=

70.00 LAND SCHEDULE (FRONT FOOT METHOD)

	LAND ZONE	FRONT FOOTAGE	AVERAGE DEPTH	DEPTH TABLE	UNIT RATE	#62 ADJ. CODE	#62 ADJ. PCT.	#63 ADJ. CODE	#63 ADJ. PCT.
1		250	105						
2									
3									
4									

71.00 LAND SCHED (UNIT RATE METHOD)

	LAND ZONE	DESC CODE	NUMBER OF UNITS	UNIT RATE	#62 ADJ. CODE	#62 ADJ. PCT.	#63 ADJ. CODE	#63 ADJ. PCT.
1								
2								
3								
4								

80.00 WORK RECORD

	BY	DATE
MEAS.	RWA	4-10-91
LIST	RWA	4-10-91
PRICE	JF	7-30-91
REVIEW		

81.00 FIELD CALLS

	BY	DATE
#1	RWA	4-10-91
#2		
#3		
#4		

85.00 COMMENTS

01 BP# 629-90 4/27/90 hood
02 714-90 5/8/90 alteration
03
04
05
06
07
08
09

INSPECTION SIGNATURE

DATE

CARP REV. 7/01/85

BLOCK _____ LOT _____ QUAL _____ CARD ____ OF ____ V.C.S. _____

BLDG. CLASS _____

PROP. CLASS _____

YEAR BUILT _____

21.00 TYPE + USE

- ____ 10 ONE FAMILY
- ____ 20 DUPLEX
- ____ 30 ROW/TOWNHOUSE
- ____ 31 END ROW/TOWN
- ____ 42 MULTIFAMILY 2
- ____ 43 MULTIFAMILY 3
- ____ 44 MULTIFAMILY 4
- ____ 51 CONVERSION 1
- ____ 52 CONVERSION 2
- ____ 53 CONVERSION 3
- ____ 54 CONVERSION 4
- ____ 55 CONVERSION 5
- ____ 60 CONDOMINIUM

22.00 STORY HEIGHT

- ____ 01 1 STORY
- ____ 02 1 STORY W/ATT
- ____ 03 1½ STORY
- ____ 04 2 STORY
- ____ 05 2 STORY W/ATT
- ____ 06 2½ STORY
- ____ 07 3 STORY
- ____ 08 3 STORY W/ATT
- ____ 09 3½ STORY

23.00 DESIGN + STYLE

- ____ 01 CONVENTIONAL
- ____ 02 COLONIAL
- ____ 03 RANCH
- ____ 04 RAISED RANCH
- ____ 05 CAPE
- ____ 06 SPLIT LEVEL
- ____ 07 BI-LEVEL
- ____ 08 CONTEMPORARY
- ____ 09 COTTAGE
- ____ 10 OLD STYLE
- ____ 80 OTHER

24.00 ROOF TYPE

- ____ 01 FLAT/SHED
- ____ 02 GABLE
- ____ 03 GAMBREL
- ____ 04 HIP
- ____ 05 MANSARD
- ____ 06 CONTEMPORARY
- ____ 80 OTHER

25.00 ROOF MATERIAL

- ____ 01 BUILT-UP
- ____ 02 METAL
- ____ 03 ROLL
- ____ 04 ASPHALT SHINGLE
- ____ 05 SLATE
- ____ 06 TILE
- ____ 07 WOOD SHINGLE
- ____ 80 OTHER

26.00 EXT. FIN. AREA QF

- ____ 01 WOOD SIDING ____ ____
- ____ 02 WOOD SHINGLE ____ ____
- ____ 03 ALUM/VINYL ____ ____
- ____ 04 ASBESTOS ____ ____
- ____ 05 STUCCO ____ ____
- ____ 06 CINDERBLK ____ ____
- ____ 07 PLYWOOD PNL ____ ____
- ____ 08 ALL BRICK ____ ____
- ____ 09 ALL STONE ____ ____
- ____ 10 PT. BRICK ____ ____
- ____ 11 PT. STONE ____ ____
- ____ 80 OTHER

27.00 FOUNDATION

- ____ 01 PILING
- ____ 02 BLOCK/CONCRETE
- ____ 03 BRICK
- ____ 04 STONE
- ____ 05 POST/PIER
- ____ 06 CONCRETE SLAB.

28.00 INTERIOR FINISH

- ____ 01 DRYWALL
- ____ 02 PLASTER
- ____ 03 KNOTTY PINE
- ____ 04 WOOD PANEL
- ____ 05 WALL BOARD
- ____ 06 PAINTED C.B.

29.00 FLOOR FINISH

- ____ 01 HARDWOOD
- ____ 02 PINE
- ____ 03 MIXED
- ____ 04 SINGLE
- ____ 05 COMPOS. TILE
- ____ 06 PART CARPET
- ____ 07 PART TILE
- ____ 08 CERAMIC TILE
- ____ 09 CONCRETE SLAB
- ____ 10 EARTH BASEMENT

30.00 BASEMENT AREA QF

- ____ 01 SF FINISH ____ ____
- ____ 02 SF LIVING ____ ____
- ____ 90 NONE

31.00 HEATING SOURCE

- ____ 01 ELECTRIC
- ____ 02 GAS
- ____ 03 OIL
- ____ 04 COAL
- ____ 05 SOLAR
- ____ 90 NONE

32.00 HEAT SYS. AREA QF

- ____ 01 FLOOR/WALL ____ ____
- ____ 02 AIR GRVTY ____ ____
- ____ 03 FORCED AIR ____ ____
- ____ 04 HOTWTR BB ____ ____
- ____ 05 WATER RAD ____ ____
- ____ 06 ELEC. BB ____ ____
- ____ 07 RADNT ELEC ____ ____
- ____ 08 HEAT PUMP ____ ____
- ____ 09 UNIT HEATR ____ ____
- ____ 90 NONE

33.00 ELECTRIC

- ____ 01 ADEQUATE
- ____ 02 LIMITED
- ____ 90 NONE

34.00 AIR COND. AREA QF

- ____ 01 ALL SEPARATE ____ ____
- ____ 02 ALL COMBINE ____ ____
- ____ 03 ALL UNIT ____ ____
- ____ 04 PT. SEPRT. ____ ____
- ____ 05 PT. COMB. ____ ____
- ____ 06 PT. UNIT ____ ____
- ____ 90 NONE

35.00 PLUMBING NO. QF

- ____ 01 4FIX BATH ____ ____
- ____ 02 3FIX BATH ____ ____
- ____ 03 2FIX BATH ____ ____
- ____ 04 1FIX BATH ____ ____
- ____ 05 KITCH SINK ____ ____
- ____ 06 SOLAR HOT ____ ____
- ____ 07 LAUNDRY TB ____ ____
- ____ 08 WATER HTR ____ ____
- ____ 09 HOT TUB ____ ____
- ____ 10 JACUZZI ____ ____
- ____ 90 NONE

36.00 FIREPLACE NO. QF

- ____ 01 1 STORY ____ ____
- ____ 02 1½ STORY ____ ____
- ____ 03 2 STORY ____ ____
- ____ 04 SAME STACK ____ ____
- ____ 05 FREESTNDING ____ ____
- ____ 06 HEATLTOR+FAN ____ ____
- ____ 90 NONE

37.00 ATTIC + DORM. AREA QF

- ____ 02 FINISH ATTC ____ ____
- ____ 03 DORMER1 (L) ____ ____
- ____ 04 DORMER2 (L) ____ ____

38.00 UNF. AREAS AREA QF

- ____ 01 FULL STORY ____ ____
- ____ 02 HALF STORY ____ ____

39.00 MISCELLANEOUS NO. QF

- ____ 01 RANGE/OVEN ____ ____
- ____ 02 FREESTND RANGE ____ ____
- ____ 03 ELECTRNIC OVEN ____ ____
- ____ 04 DISHWASHER ____ ____
- ____ 05 EXTRA KITCHEN ____ ____
- ____ 06 MODERN KITCHEN ____ ____
- ____ 07 OLD FASH. KIT ____ ____
- ____ 08 CENTRAL VACUUM ____ ____
- ____ 09 INTERCOM ____ ____
- ____ 10 SECURITY SYS. ____ ____
- ____ 11 SMOKE DETECT ____ ____
- ____ 12 ELEC OVHD DOOR ____ ____
- ____ 13 SPRINKLER ____ ____
- ____ 14 ____ ____
- ____ 15 ____ ____
- ____ 16 ____ ____

40.00 WRITE-INS VALUE QF

- 01 _____ ____ ____
- 02 _____ ____ ____

41.00 GARAGES NO CARS

- 01 ATTC GAR ____
- 02 BUILT IN ____
- 03 BASM GAR ____

BUILDING SKETCH (1 SQUARE EQUALS _____)

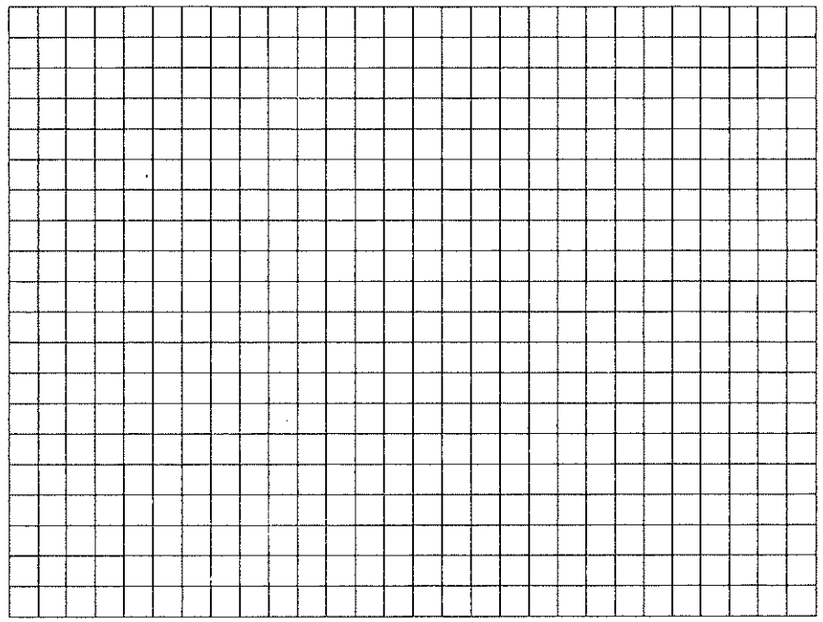

01.00 FLOOR DIMENSIONS

SEG	STYS	DESC.	BSMT	FRST	UPPR	HALF	ATTC

11.00 ATTACHED ITEMS

CODE	SEG.	AREA

ATTACH CODE LEGEND

01=WOOD DECK	06=GLAZ PORCH	11=ATT CANOPY
02=CONC PATIO	07=ENCL PORCH	12=BI GARAGE
03=FLAG PATIO	08=BSMT GAR.	13=BI OPN PCH
04=BRCK PATIO	09=ATT. GAR.	14=BI ENC PCH
05=OPEN PORCH	10=ATT CARPRT	

45.00 ROOM CNT.	B	1	2	3
01 LIVING RM				
02 DINING RM				
03 KITCHEN				
04 BATH				
05 BEDROOM				
06 REC. ROOM				
07 DEN/OFFICE				

60.00 NET CONDITION	CODE
01 INTERIOR FINISH	
02 EXTERIOR FINISH	
03 LAYOUT	

CODES: 1=EXCEL 2=GOOD 3=FAIR 4=POOR 5=DLAP

65.00 CAPITAL IMPROVEMENTS

	CODE	DATE	COST
01			
02			
03			

CAPITAL IMPROVE CODES:

01=KITCHEN 04=ATTIC
02=PLUMBING 05=BASEMENT
03=HEATING 06=ADDITION

N.H. _____ RT. _____

CARD _____ OF _____ CARDS

BLOCK	LOT	PAGE	ADDRESS

LOCATION

B- 670 L- 10.01 Q- 4A
LOC 2700 HOOPER AVE.

SALPIETRO, GIUSEPPE & VITTORIA
1842 BEACH BLVD.
PT.PLEASANT, NJ 08742

RECORD OF OWNERSHIP	SALES DATA	
	DATE	PRICE

ASSESSMENT RECORD

YEAR	LAND	BLDGS.	TOTAL	EXEMPTIONS S.C.	EXEMPTIONS VET.	TAX BOARD ACTION LAND	TAX BOARD ACTION BLDGS.
19							
19							
19							
19							
19							
19							
19							
19							
19							
19							
19							
19							
19							
19							
19							
19							
19							
19							
19							

PHOTOGRAPH

ADDITIONS – ALTERATIONS

LAND VALUE COMPUTATIONS

LOT SIZE	UNIT FRONT FOOT PRICE	CORNER INFLUENCE	DEPTH FACTOR	% DEPR.	FRONTAGE FACTOR	VALUE
					TOTAL	

NOTES:

APPRAISED VALUE

LAND 108,300	
BLDGS. 229,000	
TOTAL 337,300	

Use. Income Approach.

One Square = BUILDING SKETCH

SEE SKETCH CARD

NOTES:

Description	Section 1	Section 2	Section 3
1 Occupancy			
2 Class			
3 Quality			
4 Age			
5 Condition			
6 Avg. Sty. Ht.			
7 # Stories			
8 Total Ht.			
9 Avg. Area Per Flr.			
10 Avg. Perimeter			
11 Shape			
12 Base SF Cost			
13 Exterior Wall			
14 HVAC			
15 Elevator			
16 Miscellaneous			
17 Total			
18 Size Shape/Per Mult.			
19 Ht. Per Sty. Multi.			
20 No. Sty. Multi.			
21 Total Multi.			
22 SF Cost			
23 Update Multi.			
24 Local Multi.			
25 Cost Multi.			
26 Final SF Cost			
27 Area			
28 Total			
29 Lump Sums			
30 Replace Cost			
31 Net Condition			
32 Physical Value			
33 Net Obsolescence			
34 Depr. Value			
35 Yard Items			
36 Tot. Impr. Value			
37 Sections Total			
38			
39			

Location	Superior	Typical	Inferior
		✓	

Condition	Exterior			Interior			Layout			Overall		
	S	T	I	S	T	I	S	T	I	S	T	I
	✓			✓				✓		✓		

Mezzanine	Finished	Open	Enclosed
☐ None			
	Office	Storage	Electric

Elevators	#	Capacity	Stops	Auto.	Man.	None
Passenger						
Freight						

Doors	Man	Auto	#	Size	#	Size	#	Size
Wd. Ovrhd.								
Met. Ovrhd.								
Gl. Ovrhd.								

Heating	Forced Air	Hotwater	Perimeter
☐ None	✓		
	Electric	Recycle	Unit
	AC Separate	AC Comb.	
		✓	

Foundation	✓	Masonry		Post/Pier		CC Slab		Dock-Hi				
Basement		Avg. Ht.		Total SF		Finish SF		Extn. SF				
☐ None												
Exterior Wall		Alum.	✓	BR/BR		BR/CB		BR/Cav		CB		
		CC & G/Porc		Rein CC		Mason Ven		Met & Gl Pn		Stone/CB		
		Text. Ply		Tilt-Up		Stucco		Wd. Sdg.		Asp.		
		Corr. Met.		Sndwh.Pn		Transite						
Roof		Flat	✓	Gable		Hip		Gambael		Mansard		
		Shed		Monitor		SawTooth						
Roofing	✓	Asph.Sh.		Roll		Tar & Grvl		Wood Deck		Met Deck		
☐ Compo		Concrete		Wood Sh		Slate		Metal				
Insulation		Roof		Wall		Floor		ThermWin		None		
Floors	Concrete	Reinf. Cc.	Hardwd.	Softwood	Asph. Tile	Terraz.	Carpet	Cer. Tile				
					✓		✓	✓				
Interior Walls	✓	Drywall	Plaster	Panel	Paint. CB	Tile	Unfin.					
Tile		Floor	Wains	Wall	Ceiling	None						
Ceiling	Accoustical	Suspended	Drywall	Tile								
		✓										
Heat Source		Oil	✓	Gas	Coal	Elec.	Solar					
Plumbing	4 Fix	3 Fix	2 Fix	1 Fix	L. Ind.	S. Ind.	G.Show					
Bsmnt.												
1st Flr.			2	3								
2nd Flr.												
3rd Flr.												
4th Flr.												
Total												

Electrical	Lighting			Outlets			Wiring			Supply		
☐ None	S	T	I	S	T	I	S	T	I	S	T	I
		✓			✓			✓			✓	

Sprinkler	Wet	Dry	Chemical	Exposed	Recessed
☑ None					

#35 YARD ITEMS

Description	Q	Page	Units	Cost	Multi	Depr.	Total
ASP. PAVING	A	E-65	14200	1.15	1.12	.50	9145
CANOPY	A	E-65	279	3.50			547
						Total Value	9692

#29 LUMP SUMS

Description	Q	Page	Units	Cost	Multi	Total

BLOCK 670 LOT 10.01 QUAL.

SKETCH

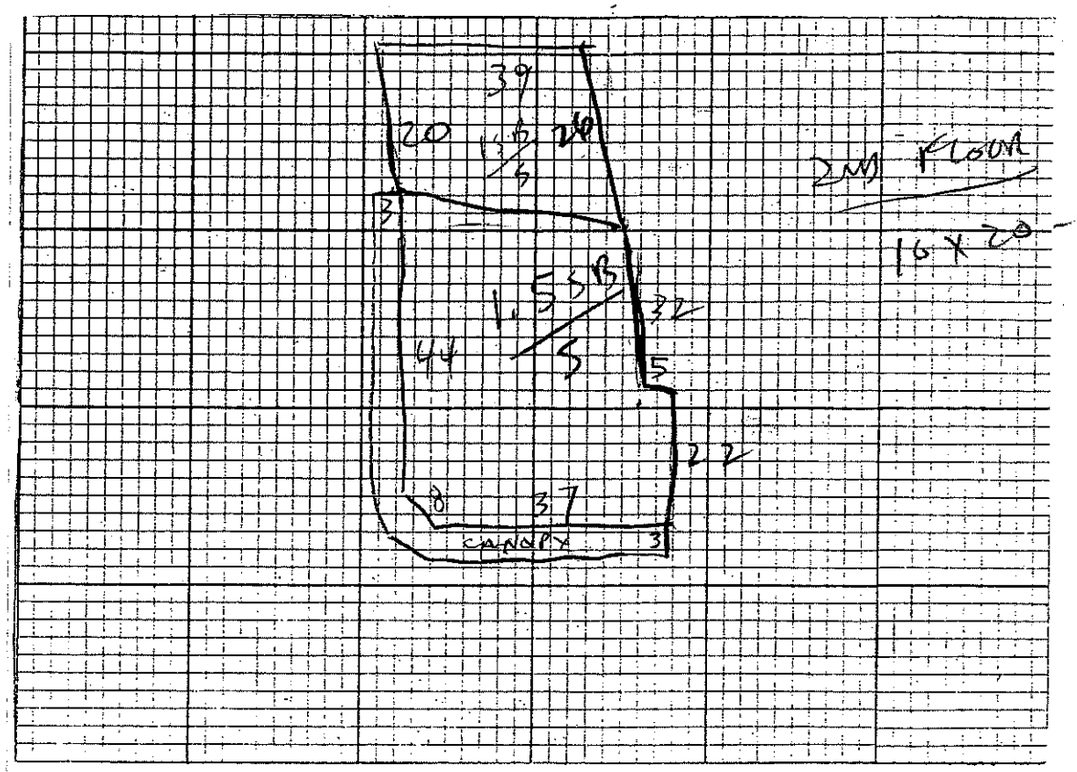

YR. BUILT 1978 EFF. 1985

BLDG. USE RESTAURANT

EXT. WALL BRK

ROOF TYPE GABLE

ROOF MAT. A/S

FLOORS W/W V/T CER.

INT. WALLS S/R PAPER

CEILING SUSPENDED CELOTEX

HEATING G/H/A CAC.

PLUMBING MENS - 2-FIX WOMEN 2-FIX EMPLOYEES 2-FIX (3) 1-FIX

SPRINKLERS SYSTEM NO WET DRY

FENCE —

ASPHALT PAV. 50 X 80, 40 X 230, 20 X 5

CONC. PAV. —

LIGHTS

OVHD DOORS

ALARMS

OTHER ITEMS;

SHELL - C.B./FRAME/STEEL

BUILDING NAME: VILLA VITTORIA

BAR -
WALKIN BOX (6 X 31)
2ND FLOOR - STORAGE
16 X LOFT

29 X 40 = 1180 ±
912

BRICK TOWNSHIP

BLOCK: 672 **LOT:** 8 **QUAL:** **CLASS:** 4A
LOCATION: 51 Chambers Bridge Rd

OWNER: Inland Southeast Brick Llc
ADDRESS: P O Box 1049
CITY, STATE, ZIP: Canfield, Oh, 44406

LOT SIZE: 9.12 **ZONE:** B3

YEAR BUILT: **MAP:** 39

1 of 2

RECORD OF OWNERSHIP

OWNER	DEED DATE	DATE REC.	BOOK	PAGE	SRIA NO.	USABLE	RATIO	SALE PRICE

60' scale

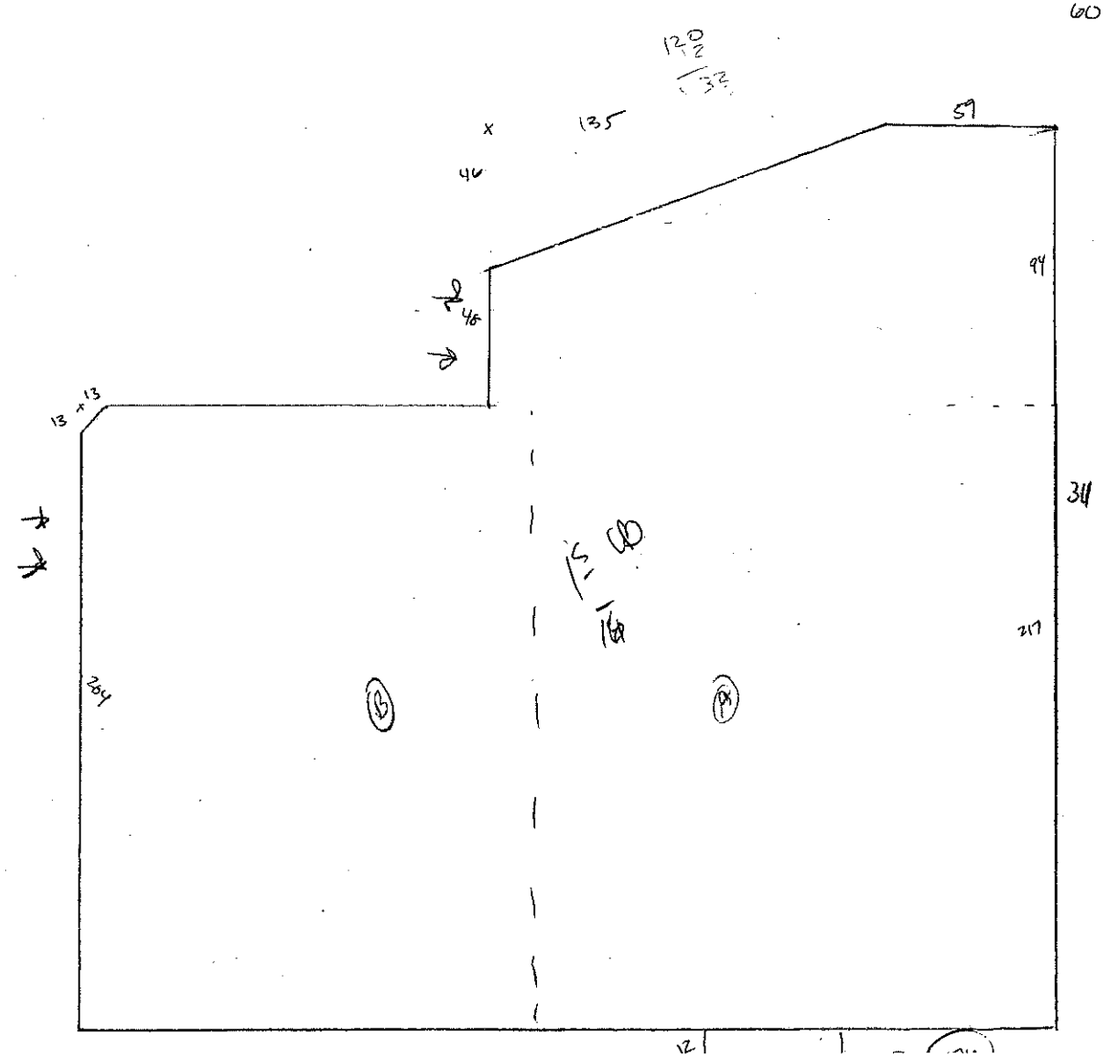

GROSS BUILDING AREA: 87,958

GROUND AREA: 87958

PERIMETER: 1248

WALL RATIO: 70.48

AVERAGE STORY HEIGHT: 16

NOTES:

(A) Bed, Bath + Beyond
(B) Best Buy
(C) Fortunoff

BEST BUY/BED BATH
2-1SB 9429

Commercial - Industrial Field Form

FOR USE WITH MARSHALL & SWIFT COMPUTERIZED SERVICE

PHOTOGRAPH

1. COST ESTIMATE FOR:
2. PROPERTY OWNER:
3. BLOCK LOT: ADDRESS:
4. CARD: OF:
5. INSPECTED BY: JF
6. DATE INSPECTED 6/25/08
7. INTERIOR: ✓ EXTERIOR ✓
8. CONSTRUCTION CLASS:
   - A. FIREPROOF STRUCTURAL STEEL FR.
   - B. REINFORCED CONCRETE FRAME
   - ✓ C. MASONRY BEARING WALLS
   - D. WOOD OR STEEL FRAMED EXT. WALL
   - E. METAL FRAME AND WALLS
9. LOCAL MULTIPLIER OR ZIP:
10. COST RANK
    - 1. LOW
    - 3. ABOVE AVG.
    - ✓ 2. AVERAGE
    - 4. HIGH
11. TOTAL FLOOR AREA:
12. SHAPE OR PERIMETER
    - 1. APPROX. Square
    - 3. IRREGULAR
    - 2. SLIGHTLY IRR.
    - 4. VERY IRR.
13. NUMBER OF STORIES:
14. AVG. STORY HEIGHT:
15. EFFECTIVE AGE: 10
16. CONDITION
    - 1. WORN OUT
    - 4. GOOD
    - 2. BADLY WORN
    - 5. VERY GOOD
    - ✓ 3. AVERAGE
    - 6. EXCELLANT
17. EXTERIOR WALL

MASONRY WALL	
1. ADOBE BRICK	8. CONC., TILT-UP
2. BRICK, CB Back-up	9. STONE VENEER
3. BRICK, COMMON	10. STONE, RUB.
4. BRICK, CAVITY	11. PILASTER +
5. FACE BRICK	12. BOND BEAMS +
✓ 6. CONC. BLOCK	13. INSULATION +
7. CONC., REINFOR.	14. STONE FACE +

CURTAIN WALLS	
14. CONC., PRECAST	19. STONE PANELS
15. CONC./GLASS Pan.	20. STEEL STUDS/ST.
16. METAL/GLASS Pan.	21. TILE, CLAY
17. STAIN. Steel/Glass	22. FACING TILE+
23. BRONZE + GLASS	

WOOD or STEEL FRAMED WALLS	
23. ALUM. SIDING	33. FACE BR. VEN.
24. ASBESTOS Siding	34. STONE VENEER
25. ASBESTOS Shingles	35. USED BRICK Ven.
26. SHINGLES	36. SIDING, Vinyl
✓ 27. SHAKES	37. SIDING, Hardboard
✓ 28. STUCCO on Wire	38. SIDING, Plywood
29. STUCCO on Sheath.	39. BOARD/BATTEN
30. WOOD SIDING	40. LOG, RUSTIC
31. WD. SIDING ON SH	41. GLASS WALL

17. EXTERIOR WALLS (Cont.)

PRE-ENGINEERED WALLS	
51. STEEL - 2 SIDES	54. ASB. 2 SIDES
52. ALUM. - 2 SIDES	55. STEEL/GYP. BD.
53. GLASS/METAL	

WOOD or STEEL SKELTON FRAMES	
42. ALUM. COVER	46. TRANSITE
44. CORR./STEEL FR.	47. SIDING
45. CORR./WOOD FR.	48. SHEATHING+

18. HEATING, COOLING & VENTILATION

1. ELECTRIC	12. STEAM w/BOILER
2. ELEC. WALL Htrs.	13. STEAM-No BOILER
3. FORCED AIR	14. A/C-HOT/CHWAT.
4. FLOOR FURNACE	15. A/C-WARM/COOL
5. STEAM Radiators	✓ 16. Pkg HEAT & COOL
6. GRAVITY FURN.	17. HEAT PUMP
7. HEATERS, Vented	18. EVAP. COOLING
8. HOT WATER	19. REFRIG. COOLING
9. H.W. - RADIANT	20. VENTILATION
10. SPACE HEAT, GAS	21. WALL FURNACE
11. SPACE Heat Steam	

19. ELEVATORS YES NO
PASSENGER FREIGHT FLOORS:
20. SPRINKLERS DRY WET
Sq. Ft. Area Served 100
21. BASEMENT
- 1. UNFINISHED
- ✓ 2. FINISHED
- 3. PARKING
- 4. STORAGE
- 5. UTILITY
- 6. RESIDENT UNITS
- 7. DISPLAY
- 8. OFFICE

ROOF TYPE

A. HIP	D. GABLE
B. MANSARD	✓ E. FLAT
C. GAMBREL	

ROOF COVER

A. ASHP. SHINGLES	E. SLATE
B. WOOD SHINGLES	F. ROLL
C. COMP SHINGLES	G. TAR & GRAVEL
D. ASBES. SHINGLES	

PLUMBING

A. 3 FIXT BATH	E. STALL SHOWER
B. 2 FIXT BATH	F. URINAL
C. SINK	G. SLOP SINK
D. TOILET	

COST REFINEMENTS	
MEZZANINES	AREA
MZM: DISPLAY	
MZB: OFFICE	
MZC: STORAGE	
MZD: OPEN	
BALCONIES	AREA
BCA: APARTMENT EXTERIOR	
BCD: AUDITORIUM	
BCC: CHURCH	
BCT: THEATER	
DOCKS	AREA
DLR: LOADING WITH ROOF	
DLW: LOADING WITHOUT ROOF	
DOS: SHIPPING	
DOF: DOCK HEIGHT FLOORS	
PARKING LOTS	AREA
PAS: ASPHALT PARKING	90
PCO: CONCRETE PAVING	
LIG: LIGHTING - AREA SERVED	
BUM: PARKING BUMPERS - LIN. FT.	
BANK ACCESSORIES	AREA
MONEY VAULT	
STORAGE VAULT	
ATM (DRIVE UP / WALK UP)	
PNEUMATIC TUBE SYSTEM	
SERVICE STATION	AREA
CANOPY	
CAR LIFTS	
GAS PUMPS	
ISLAND	
UNDERGROUND TANKS	
KIOSKS	
ACCESSORY IMPROVEMENTS	

NOTES:

BUILDING PERMITS

SITE

ZONE:
TOPOGRAPHY: level

IMPROVEMENTS

PUBLIC WATER	✓	PRIVATE WELL	
CURBS	✓	PAVED ROAD	✓
UNPAVED ROAD		SIDEWALK	✓
PUBLIC SEWER	✓	SEPTIC TANK	
ELECTRIC	✓	GAS	✓

LANDSCAPING

GOOD		AVG.	✓	FAIR	

PROPERTY USE: Retail

PERCENTAGE BREAKDOWN:

TENANT INFORMATION

NAME:	LOCATION:

672 - 8

2 of 2

RECORD OF OWNERSHIP

OWNER	DEED DATE	DATE REC.	BOOK	PAGE	SRIA NO.	USABLE	RATIO	SALE PRICE

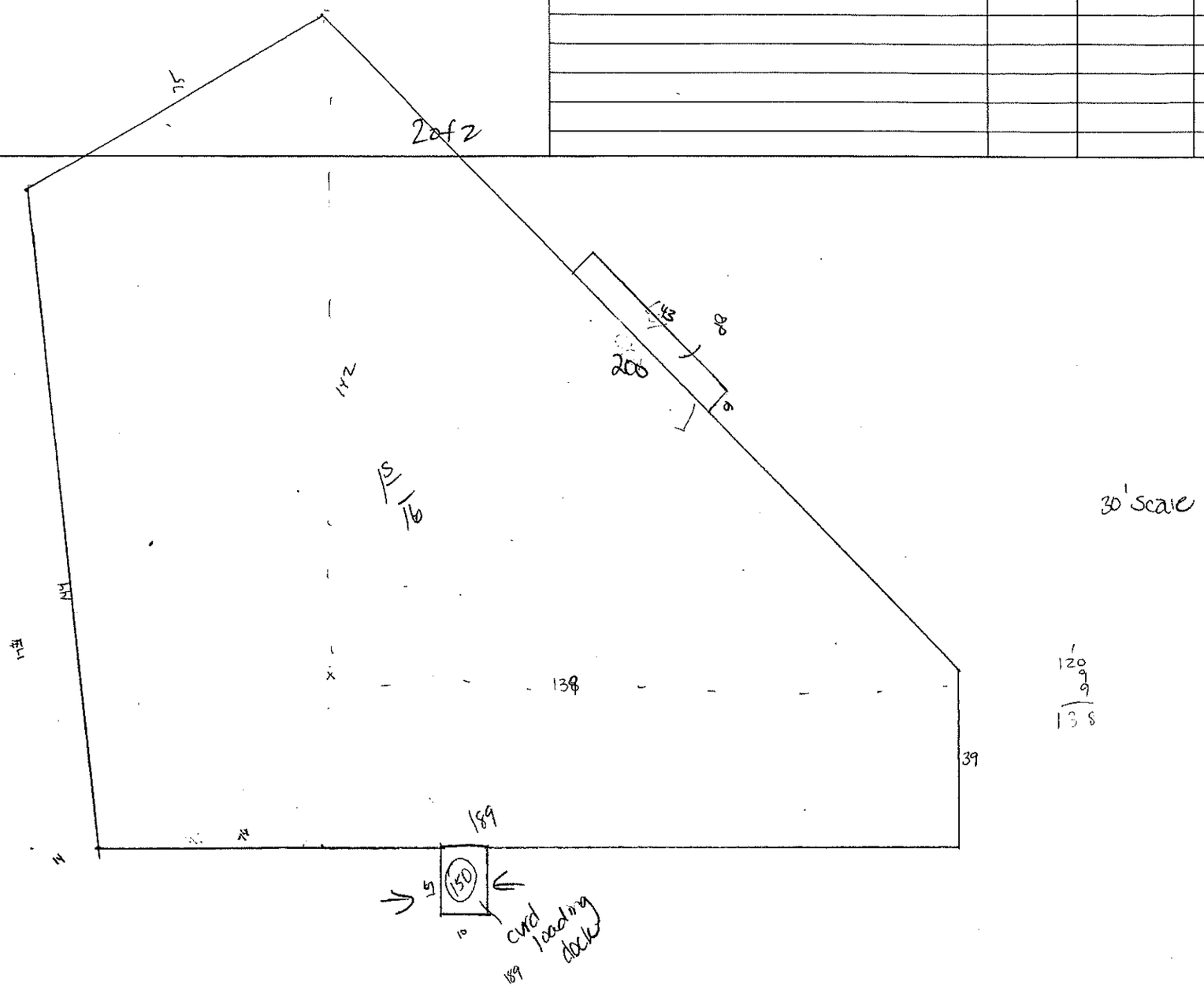

GROSS BUILDING AREA: 24943

GROUND AREA: 24943

PERIMETER: 646

WALL RATIO: 38.61

AVERAGE STORY HEIGHT: 16

NOTES:

Vacant

Commercial - Industrial Field Form

FOR USE WITH MARSHALL & SWIFT COMPUTERIZED SERVICE

PHOTOGRAPH

1. COST ESTIMATE FOR:
2. PROPERTY OWNER:
3. BLOCK LOT: ADDRESS:
4. CARD: OF:
5. INSPECTED BY: JF
6. DATE INSPECTED
7. INTERIOR: EXTERIOR: X
8. CONSTRUCTION CLASS:
   - A. FIREPROOF STRUCTURAL STEEL FR.
   - B. REINFORCED CONCRETE FRAME
   - C. MASONRY BEARING WALLS
   - D. WOOD OR STEEL FRAMED EXT. WALL
   - E. METAL FRAME AND WALLS
9. LOCAL MULTIPLIER OR ZIP:
10. COST RANK
    - 1. LOW
    - 2. AVERAGE
    - 3. ABOVE AVG.
    - 4. HIGH.
11. TOTAL FLOOR AREA:
12. SHAPE OR PERIMETER
    - 1. APPROX. Square
    - 2. SLIGHTLY IRR.
    - 3. IRREGULAR
    - 4. VERY IRR.
13. NUMBER OF STORIES:
14. AVG. STORY HEIGHT:
15. EFFECTIVE AGE: 10
16. CONDITION
    - 1. WORN OUT
    - 2. BADLY WORN
    - 3. AVERAGE
    - 4. GOOD
    - 5. VERY GOOD
    - 6. EXCELLANT
17. EXTERIOR WALL

MASONRY WALL

- 1. ADOBE BRICK
- 2. BRICK, CB Back-up
- 3. BRICK, COMMON
- 4. BRICK, CAVITY
- 5. FACE BRICK
- 6. CONC. BLOCK
- 7. CONC., REINFOR.
- 8. CONC., TILT-UP
- 9. STONE VENEER
- 10. STONE, RUB.
- 11. PILASTER +
- 12. BOND BEAMS +
- 13. INSULATION +
- 14. STONE FACE +

CURTAIN WALLS

- 14. CONC., PRECAST
- 15. CONC./GLASS Pan.
- 16. METAL/GLASS Pan.
- 17. STAIN. Steel/Glass
- 23. BRONZE + GLASS
- 19. STONE PANELS
- 20. STEEL STUDS/ST.
- 21. TILE, CLAY
- 22. FACING TILE+

WOOD or STEEL FRAMED WALLS

- 23. ALUM. SIDING
- 24. ASBESTOS Siding
- 25. ASBESTOS Shingles
- 26. SHINGLES
- 27. SHAKES
- 28. STUCCO on Wire
- 29. STUCCO on Sheath.
- 30. WOOD SIDING
- 31. WD. SIDING ON SH.
- 33. FACE BR. VEN.
- 34. STONE VENEER
- 35. USED BRICK Ven.
- 36. SIDING, Vinyl
- 37. SIDING, Hardboard
- 38. SIDING, Plywood
- 39. BOARD/BATTEN
- 40. LOG, RUSTIC
- 41. GLASS WALL

17. EXTERIOR WALLS (Cont.)

PRE-ENGINEERED WALLS

- 51. STEEL - 2 SIDES
- 52. ALUM. - 2 SIDES
- 53. GLASS/METAL
- 54. ASB. 2 SIDES
- 55. STEEL/GYP. BD.

WOOD or STEEL SKELTON FRAMES

- 42. ALUM. COVER
- 44. CORR./STEEL FR.
- 45. CORR./WOOD FR.
- 46. TRANSITE
- 47. SIDING
- 48. SHEATHING+

18. HEATING, COOLING & VENTILATION

- 1. ELECTRIC
- 2. ELEC. WALL Htrs.
- 3. FORCED AIR
- 4. FLOOR FURNACE
- 5. STEAM Radiators
- 6. GRAVITY FURN.
- 7. HEATERS, Vented
- 8. HOT WATER
- 9. H.W. - RADIANT
- 10. SPACE HEAT, GAS
- 11. SPACE Heat Steam
- 12. STEAM w/BOILER
- 13. STEAM-No BOILER
- 14. A/C-HOT/CHWAT.
- 15. A/C-WARM/COOL
- 16. Pkg HEAT & COOL
- 17. HEAT PUMP
- 18. EVAP. COOLING
- 19. REFRIG. COOLING
- 20. VENTILATION
- 21. WALL FURNACE

19. ELEVATORS YES NO

PASSENGER FREIGHT FLOORS:

20. SPRINKLERS DRY WET

Sq. Ft. Area Served 100

21. BASEMENT

- 1. UNFINISHED
- 2. FINISHED
- 3. PARKING
- 4. STORAGE
- 5. UTILITY
- 6. RESIDENT UNITS
- 7. DISPLAY
- 8. OFFICE

ROOF TYPE

- A. HIP
- B. MANSARD
- C. GAMBREL
- D. GABLE
- E. FLAT

ROOF COVER

- A. ASHP. SHINGLES
- B. WOOD SHINGLES
- C. COMP SHINGLES
- D. ASBES. SHINGLES
- E. SLATE
- F. ROLL
- G. TAR & GRAVEL

PLUMBING

- A. 3 FIXT BATH
- B. 2 FIXT BATH
- C. SINK
- D. TOILET
- E. STALL SHOWER
- F. URINAL
- G. SLOP SINK

COST REFINEMENTS	
MEZZANINES	AREA
MZM: DISPLAY	
MZB: OFFICE	
MZC: STORAGE	
MZD: OPEN	
BALCONIES	AREA
BCA: APARTMENT EXTERIOR	
BCD: AUDITORIUM	
BCC: CHURCH	
BCT: THEATER	
DOCKS	AREA
DLR: LOADING WITH ROOF	
DLW: LOADING WITHOUT ROOF	
DOS: SHIPPING	
DOF: DOCK HEIGHT FLOORS	
PARKING LOTS	AREA
PAS: ASPHALT PARKING	
PCO: CONCRETE PAVING	
LIG: LIGHTING - AREA SERVED	
BUM: PARKING BUMPERS - LIN. FT.	
BANK ACCESSORIES	AREA
MONEY VAULT	
STORAGE VAULT	
ATM (DRIVE UP / WALK UP)	
PNEUMATIC TUBE SYSTEM	
SERVICE STATION	AREA
CANOPY	
CAR LIFTS	
GAS PUMPS	
ISLAND	
UNDERGROUND TANKS	
KIOSKS	
ACCESSORY IMPROVEMENTS	

NOTES:

BUILDING PERMITS

SITE

ZONE:

TOPOGRAPHY: level

IMPROVEMENTS

PUBLIC WATER		PRIVATE WELL	
CURBS		PAVED ROAD	
UNPAVED ROAD		SIDEWALK	
PUBLIC SEWER		SEPTIC TANK	
ELECTRIC		GAS	

LANDSCAPING

GOOD | AVG. | FAIR

PROPERTY USE: Retail

PERCENTAGE BREAKDOWN:

TENANT INFORMATION

NAME:	LOCATION:

BRICK TOWNSHIP

BLOCK: 672 **LOT:** 12 **QUAL:** **CLASS:** 4A
LOCATION: 705 Route 70

OWNER: One More Enterprise, Inc%Tgi Friday
ADDRESS: 2 Woodland Drive
CITY, STATE, ZIP: Dallas, Pa, 18612

LOT SIZE: 0.39 **ZONE:** B3

YEAR BUILT: **MAP:** 39

RECORD OF OWNERSHIP

OWNER	DEED DATE	DATE REC.	BOOK	PAGE	SRIA NO.	USABLE	RATIO	SALE PRICE

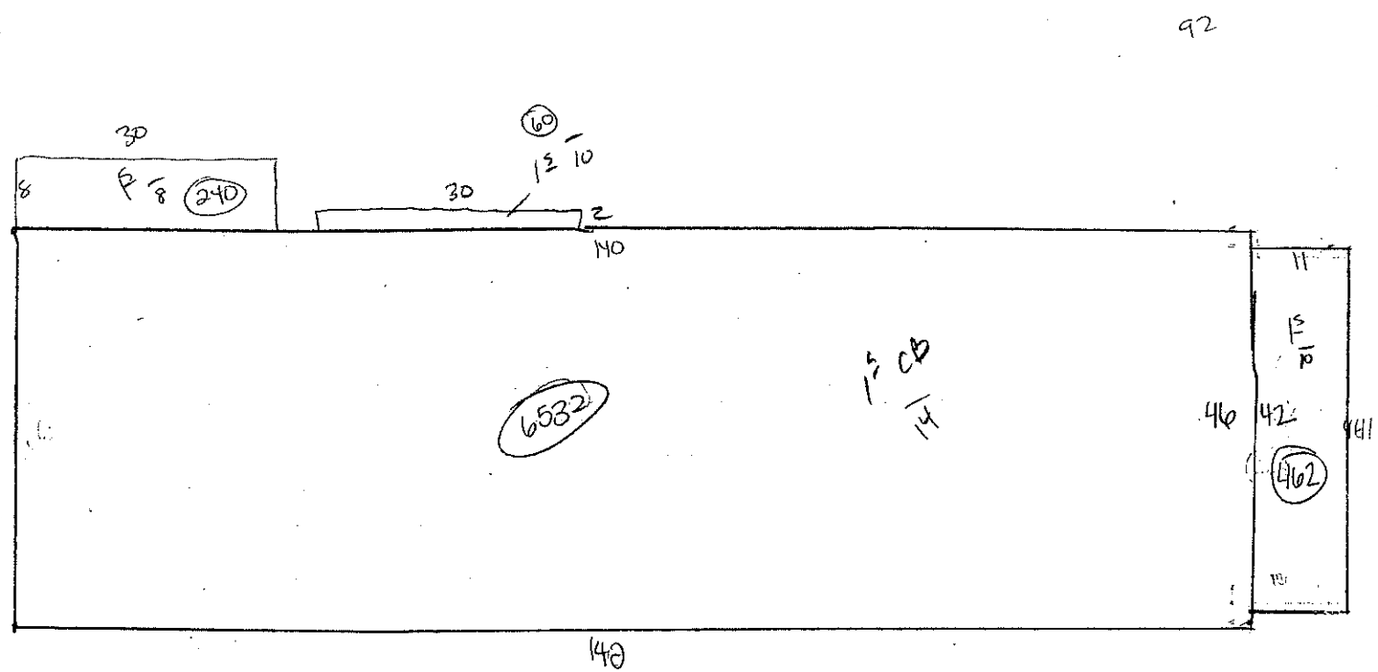

GROSS BUILDING AREA: 7294

GROUND AREA: 7294

PERIMETER: 418

WALL RATIO: 17.45

AVERAGE STORY HEIGHT: 14

NOTES:

TGI Fridays

TGI FRIDAYS
1SCB 7662

Commercial - Industrial Field Form

FOR USE WITH MARSHALL & SWIFT COMPUTERIZED SERVICE

PHOTOGRAPH

1. COST ESTIMATE FOR:
2. PROPERTY OWNER:
3. BLOCK LOT: ADDRESS:
4. CARD: OF:
5. INSPECTED BY: JF
6. DATE INSPECTED 10/25/08
7. INTERIOR: X EXTERIOR: X
8. CONSTRUCTION CLASS:
   - A. FIREPROOF STRUCTURAL STEEL FR.
   - B. REINFORCED CONCRETE FRAME
   - ✓ C. MASONRY BEARING WALLS
   - D. WOOD OR STEEL FRAMED EXT. WALL
   - E. METAL FRAME AND WALLS
9. LOCAL MULTIPLIER OR ZIP:
10. COST RANK
    - 1. LOW
    - 3. ABOVE AVG.
    - ✓ 2. AVERAGE
    - 4. HIGH
11. TOTAL FLOOR AREA:
12. SHAPE OR PERIMETER
    - ✓ 1. APPROX. Square
    - 3. IRREGULAR
    - 2. SLIGHTLY IRR.
    - 4. VERY IRR.
13. NUMBER OF STORIES: 1
14. AVG. STORY HEIGHT: 14
15. EFFECTIVE AGE: 5
16. CONDITION
    - 1. WORN OUT
    - 4. GOOD
    - 2. BADLY WORN
    - 5. VERY GOOD
    - ✓ 3. AVERAGE
    - 6. EXCELLANT
17. EXTERIOR WALL

MASONRY WALL

- 1. ADOBE BRICK
- 8. CONC., TILT-UP
- 2. BRICK, CB Back-up
- 9. STONE VENEER
- 3. BRICK, COMMON
- 10. STONE, RUB.
- 4. BRICK, CAVITY
- 11. PILASTER +
- 5. FACE BRICK
- 12. BOND BEAMS +
- 6. CONC. BLOCK
- 13. INSULATION +
- 7. CONC., REINFOR.
- 14. STONE FACE +

CURTAIN WALLS

- 14. CONC., PRECAST
- 19. STONE PANELS
- 15. CONC./GLASS Pan.
- 20. STEEL STUDS/ST.
- 16. METAL/GLASS Pan.
- 21. TILE, CLAY
- 17. STAIN. Steel/Glass
- 22. FACING TILE+
- 23. BRONZE + GLASS

WOOD or STEEL FRAMED WALLS

- 23. ALUM. SIDING
- 33. FACE BR. VEN.
- 24. ASBESTOS Siding
- 34. STONE VENEER
- 25. ASBESTOS Shingles
- 35. USED BRICK Ven.
- 26. SHINGLES
- 36. SIDING, Vinyl
- 27. SHAKES
- 37. SIDING, Hardboard
- ✓ 28. STUCCO on Wire
- 38. SIDING, Plywood
- 29. STUCCO on Sheath.
- 39. BOARD/BATTEN
- 30. WOOD SIDING
- 40. LOG, RUSTIC
- 31. WD. SIDING ON SH
- 41. GLASS WALL

17. EXTERIOR WALLS (Cont.)

PRE-ENGINEERED WALLS

- 51. STEEL - 2 SIDES
- 54. ASB. 2 SIDES
- 52. ALUM. - 2 SIDES
- 55. STEEL/GYP. BD.
- 53. GLASS/METAL

WOOD or STEEL SKELTON FRAMES

- 42. ALUM. COVER
- 46. TRANSITE
- 44. CORR./STEEL FR.
- 47. SIDING
- 45. CORR./WOOD FR.
- 48. SHEATHING+

18. HEATING, COOLING & VENTILATION

- 1. ELECTRIC
- 12. STEAM w/BOILER
- 2. ELEC. WALL Htrs.
- 13. STEAM-No BOILER
- 3. FORCED AIR
- 14. A/C-HOT/CHWAT.
- 4. FLOOR FURNACE
- ✓ 15. A/C-WARM/COOL
- 5. STEAM Radiators
- ✓ 16. Pkg HEAT & COOL
- 6. GRAVITY FURN.
- 17. HEAT PUMP
- 7. HEATERS, Vented
- 18. EVAP. COOLING
- 8. HOT WATER
- 19. REFRIG. COOLING
- 9. H.W. - RADIANT
- 20. VENTILATION
- 10. SPACE HEAT, GAS
- 21. WALL FURNACE
- 11. SPACE Heat Steam

19. ELEVATORS YES NO

PASSENGER FREIGHT FLOORS:

20. SPRINKLERS DRY (WET)

Sq. Ft. Area Served 100

21. BASEMENT

- ✓ 1. UNFINISHED
- 2. FINISHED
- 3. PARKING
- 4. STORAGE
- 5. UTILITY
- 6. RESIDENT UNITS
- 7. DISPLAY
- 8. OFFICE

ROOF TYPE

- A. HIP
- ✓ D. GABLE
- B. MANSARD
- ✓ E. FLAT
- C. GAMBREL

ROOF COVER

- A. ASHP. SHINGLES
- E. SLATE
- B. WOOD SHINGLES
- F. ROLL
- C. COMP SHINGLES
- G. TAR & GRAVEL
- D. ASBES. SHINGLES

PLUMBING

- A. 3 FIXT BATH
- E. STALL SHOWER
- B. 2 FIXT BATH
- F. URINAL
- C. SINK
- G. SLOP SINK
- D. TOILET

COST REFINEMENTS	
MEZZANINES	AREA
MZM: DISPLAY	
MZB: OFFICE	
MZC: STORAGE	
MZD: OPEN	
BALCONIES	AREA
BCA: APARTMENT EXTERIOR	
BCD: AUDITORIUM	
BCC: CHURCH	
BCT: THEATER	
DOCKS	AREA
DLR: LOADING WITH ROOF	
DLW: LOADING WITHOUT ROOF	
DOS: SHIPPING	
DOF: DOCK HEIGHT FLOORS	
PARKING LOTS	AREA
PAS: ASPHALT PARKING	80
PCO: CONCRETE PAVING	
LIG: LIGHTING - AREA SERVED	
BUM: PARKING BUMPERS - LIN. FT.	
BANK ACCESSORIES	AREA
MONEY VAULT	
STORAGE VAULT	
ATM (DRIVE UP / WALK UP)	
PNEUMATIC TUBE SYSTEM	
SERVICE STATION	AREA
CANOPY	
CAR LIFTS	
GAS PUMPS	
ISLAND	
UNDERGROUND TANKS	
KIOSKS	
ACCESSORY IMPROVEMENTS	

NOTES:

BUILDING PERMITS

SITE

ZONE:

TOPOGRAPHY: level

IMPROVEMENTS

PUBLIC WATER		PRIVATE WELL	
CURBS		PAVED ROAD	
UNPAVED ROAD		SIDEWALK	
PUBLIC SEWER		SEPTIC TANK	
ELECTRIC		GAS	

LANDSCAPING

GOOD		AVG.	✓	FAIR

PROPERTY USE: Restaurant 100%

PERCENTAGE BREAKDOWN:

TENANT INFORMATION

NAME:	LOCATION: