BLOCK 548 LOT 21 QUALIFICATION CODE _____ ADDRESS (SITE) 41 Drum Point Rd. PERMIT NO. 07-2435

CONSTRUCTION PERMIT APPLICATION

07-003625

Applicant Completes: Sections I, II, III (optional), IV, VI, and VII

I. IDENTIFICATION

1. Proposed Work Site at: 41 Drum Point Rd. Brick NJ 08723
2. Name of Owner in Fee: Brick twp. Board of Ed.
   Tel. (732) 785-3000 e-mail –
   Address 101 Hendrickson Ave (street) Brick (municipality) 08723 (zip code)
3. Ownership in Fee: Public ✓ Private _____
4. Principal Contractor: Nova Creek, Inc Tel. (732) 553-0280
   Address 1866 Rt. 35 South Amboy NJ 08879 e-mail Peter@Novacreek.com
   License No. OR, if new home, Builder Reg. No. 13VH02343200 Exp. Date 12/31/07
   Home Improvement Contractor Registration No. or Exemption Reason (if applicable): _____
   Federal Emp. ID No. 061696100 FAX: (732) 553-0061
5. Architect or Engineer T&M assoc. Contact Philip Kavanagh
   Address 11 Tindall Rd. Middletown NJ 07748 e-mail –
   Tel. (732) 671-6400 FAX: (732) 671-7365
6. Responsible Person in Charge once Work has Begun Peter Frei
   Tel. (732) 773-8772 FAX: (732) 553-0061

V. FEE SUMMARY (for office use only)

		Update	Update
1. Building	$		
2. Electrical			
3. Plumbing			
4. Fire Protection			
5. Elevator Devices			
6. Subtotal			
7. Less 20% for State Plan Review	$		
8. Subtotal	$		
9. State Permit Surcharge Fee			
10. Subtotal	$		
11. Cert. of Occupancy			
12. Other			
13. TOTAL	$		

exempt exempt exempt

VI. BUILDING/SITE CHARACTERISTICS (office use only)

1. Number of Stories _____
2. Height of Structure _____ ft.
3. Area — Largest Floor _____ sq. ft.
4. New Building Area _____ sq. ft.
5. Volume of New Structure _____ cu. ft.
6. Construction Classification _____
7. Total Land Area Disturbed _____ sq. ft.
8. Flood Hazard Zone _____
9. Base Flood Elevation _____ ft.
10. Wetlands yes _____ no _____
11. Max. Live Load _____
12. Max. Occupancy Load _____

plans turn #27

IIa. PROPOSED WORK

☐ Minor Work ☐ New Building ☐ Addition ☐ Demolition
☐ Repair ☐ Alteration ☑ Renovation ☐ Reconstruction
☐ Asbestos Abat. -Subch. 8 ☐ Lead Hazard Abatement ☐ Radon Remediation ☐ Annual Permit

IIb. SUBCODES (Check all that apply)

FOR OFFICE USE ONLY (Optional)

	Est. Cost	Plans Rec'd by	Date Rec'd	Rejection Date	Approval Date	Re-viewer	Resubmission Dates Approval	Resubmission Dates Rejection	Re-viewer
☑ Building		MSL	7/19/07		8-6-07	FM			
☑ Electrical	50,000	Eng	7/26/07		7/27/07		3-28-08		
☐ Plumbing									
☐ Fire Protection									
☐ Elevator									
TOTAL COSTS									

VII. DESCRIPTION OF BUILDING USE

A. RESIDENTIAL *(primary use)*
1. State Specific Use:
2. Use Group:
3. Change in Use Group, Indicate Former:
4. No. of dwelling units: All Units / Income-restricted
   Before Construction _____ / _____
   After Construction _____ / _____
   Net Gain or Loss _____ / _____

B. NON-RESIDENTIAL *(primary use)*
1. State Specific Use:
2. Use Group:
3. Change in Use Group, Indicate Former:

C. MIXED USE -List secondary use(s):

III. PLAN REVIEW (optional)

DO YOU WANT:
1. ☐ Partial Releases
2. ☐ Prototype Processing

IV. DOES OR WILL YOUR BUILDING CONTAIN ANY OF THE FOLLOWING?

1. ☐ Elevators/Escalators/Lifts/Dumbwaiters/Moving Walks
2. ☐ High Pressure Boilers
3. ☐ Pressure Vessels
4. ☐ Refrigeration Systems
5. ☐ Cross-Connections/Backflow Preventers
6. ☐ Hazardous Uses/Places of Assembly
7. ☐ Sprinklers
8. ☐ Smoke Control Systems in Open Wells
9. ☐ Underground Storage Tanks
10. ☐ Swimming Pools, Spas and Hot Tubs

Called Contractor 08-14-07 left message on machine

CERTIFICATION IN LIEU OF OATH

I. OWNER SECTION (to be completed if the applicant is the owner in fee)

I hereby certify that I am the owner in fee of the property listed on Page 1.

Mark the following applicable boxes:

A. ( ) I further certify that a new home (private residence) will be constructed on this property for my own use and occupancy. This dwelling is to be occupied by myself and is not to be used for any purpose other than single family residential use. I attest that all construction, plumbing, or electrical work will be done, in whole or in part, by me or by subcontractors under my supervision, in accordance with all applicable laws; and, I further acknowledge that said new home is not covered under the New Home Warranty and Builders Registration Act (N.J.S.A. 46:3B-1 et seq.) and that such fact shall be disclosed to any person purchasing this property within ten years of the date of issuance of a certificate of occupancy.

I UNDERSTAND THAT IN MARKING BOX A, I ACKNOWLEDGE THAT I AM ASSUMING RESPONSIBILITY FOR THE WORK DONE ON SAID PROPERTY, THE CONDITION OF THE PROPERTY PRIOR TO, DURING, AND AFTER ANY WORK PERFORMED, AND FOR THE PERFORMANCE OF THE SUBCONTRACTORS I HIRE, EMPLOY, OR OTHERWISE CONTRACT OR WITH WHOM I MAKE AGREEMENTS TO PERFORM WORK. I AM VOLUNTARILY AND KNOWINGLY ASSUMING THIS RESPONSIBILITY.

B. ( ) I further certify the following as required by the New Jersey Uniform Construction Code, N.J.A.C. 5:23-2.15(e)1.ix:

I personally prepared the plans submitted for: 1) the new home referred to in A.; or, 2) an addition, alteration, renovation, or repair to an existing single family residence owned and occupied by myself and located on the property listed on Page 1; or, 3) a new structure that will be physically separate from, but that will be deemed part of, an existing single family residence that is owned and occupied by myself and located on the property listed on Page 1.

C. ( ) I further certify that I will perform or supervise the following work:
C.1. ( ) Building C.2. ( ) Fire Protection

I further certify that I will perform the following work:
C.3. ( ) Electrical C.4. ( ) Plumbing

D. ( ) I agree to advise all contractors on this project that they are required to be registered with the New Jersey Division of Taxation and to comply with all New Jersey tax laws.

I further certify the following as required by the Uniform Construction Code, N.J.A.C. 5:23-2.15(a)5: All required State, county, and local prior approvals have been given, including such certification as the construction official may require.

I understand that if any of the above statements are willfully false, I am subject to punishment.

Signature _____ Date _____

II. AGENT SECTION (to be completed if the applicant is not the owner in fee)

I hereby certify the following as required by the Uniform Construction Code, N.J.A.C. 5:23-2.15(d): the proposed work is authorized by the owner in fee; and I have been authorized by the owner in fee to make this application as his agent.

I further certify the following as required by the Uniform Construction Code, N.J.A.C. 5:23-2.15(a)5: All required State, county, and local prior approvals have been given, including such certification as the construction official may require.

I agree to advise all contractors on this project that they are required to be registered with the New Jersey Division of Taxation and to comply with all New Jersey tax laws.

I understand that if any of the above statements are willfully false, I am subject to punishment.

(✓) Check if contractor.

Agent Name Vouq Crete, Inc.

Address 1866 Rt. 35
South Amboy NJ 08879

Telephone (732) 553-0280

Signature _____

III. ( ) LEAD HAZARD ABATEMENT: Include Homeowner or Building Owner Affidavit as per N.J.A.C. 5:17.

FOR OFFICE USE ONLY

Constituent Contact Report

Date	Comments	Initials

☒ Zoning Application deemed complete Initialed: [illegible] Date: 6/19/09

☐ Zoning Application approved Initialed: _____ Date: _____

☐ Zoning permit updates:

_____

_____

_____

IMPORTANT
A.H.B.T. - EXEMPT

Brick Township
401 Chambersbridge Rd
Brick, NJ 08723

Date Issued	07/14/2010
Control Number	C-07-003625
Permit Number	07-2435
Permit Issue Date	08/07/2007
Certificate Number	07-2435

Certificate

Construction Code Division

(Certificate of Approval)

Identification

Work Site Location: 41 & 43 DRUM POINT RD. Brick Township, NJ Block: 548 Lot: 21 Qual:

Owner in Fee: BRICK TOWNSHIP BOARD OF EDUCATION

Owner Address: 101 HENDRICKSON AVE BRICK NJ 08723

Telephone: (732) 785-3000

Contractor ELITE ELECTRICAL CON

Address 133 N 19TH STREET KENILWORTH NJ

Telephone: (973) 204-4489 Fax:

License Number or Builders Registration Number: 15899 Federal Emp. Number: 25-3230755

Home Warranty Number:

Type of Warranty Plan: ☐ State ☐ Private

Use Group: U Construction Classification:

Maximum Live Load: 0 Maximum Occupancy Load: 0

Description of Work/Use: PLAYGROUND RENOVATIONS

Certificate Comments:

☐ **Certificate of Occupancy**
This serves notice that said building or structure has been constructed in accordance with the New Jersey Uniform Construction Code and is approved for occupancy.

☑ **Certificate of Approval**
This serves notice that the work completed has been constructed or installed in accordance with the New Jersey Uniform Construction Code and is approved. If the permit was issued for minor work, this certificate was based upon what was visible at the time of inspection.

☐ **Certificate of Continued Occupancy**
This serves notice that based on a general inspection of the visible parts of the building there are no imminent hazards and the building is approved for continued occupancy.

☐ **Temporary Certificate of Compliance**
The following conditions must be met no later than
or the owner will be subject to fine or order to vacate:
This certificate has an expiration date of:
Conditions to be met:

☐ **Certificate of Clearance - Lead Abatement 5:17**
This serves notice that based on written certification, lead abatement was performed as per NJAC5:17 to the following extent.

☐ Total removal of lead-based paint hazards in scope of work
☐ Partial or limited time period (years); see file

☐ **Certificate of Clearance - Asbestos Abatement**
This serves notice that based on written certification, asbestos abatement was performed to the following extent.

☐ Total removal of asbestos hazards in scope of work
☐ Partial or limited time period (years); see file

☐ **Certificate of Compliance**
This serves notice that said potentially hazardous equipment has been installed and/or maintained in accordance with the New Jersey Uniform Construction Code and is approved for use until

☐ **Temporary Certificate of Occupancy**
The following conditions must be met no later than:
or the owner will be subject to fine or order to vacate:
This certificate has an expiration date of:
Conditions to be met:

Construction Official

Fee: $0.00
Check Number:
Collected By:

PERMIT UPDATE

Date Update Issued 8/22/2007
Control # C-07-004105
Permit # 07-2435+B

IDENTIFICATION Block: 548 Lot: 21 Qualifier

Work Site Location: 41 & 43 DRUM POINT RD. Brick Township, NJ

Owner in Fee: BRICK TOWNSHIP BOARD OF EDUCATION
101 HENDRICKSON AVE BRICK NJ 08723

Telephone: (732) 785-3000

Contractor: NOVA CRETE INC
Address: 1866 ROUTE 35 SOUTH AMBOY NJ 08879

Telephone: (732) 553-0280
Lic. No. or Bldrs. Reg. No.
Federal Employee. No.

Is hereby granted permission to perform the following work:

- [x] BUILDING
- [ ] PLUMBING
- [ ] LEAD HAZARD ABATEMENT
- [ ] ELECTRICAL
- [ ] FIRE PROTECTION
- [ ] DEMOLITION
- [ ] ELEVATOR DEVICES
- [ ] ASBESTOS ABATEMENT (Subchapter 8 only)
- [ ] OTHER

DESCRIPTION OF WORK:

PLAYGROUND RENOVATIONS UPDATE + B GAZEBO CONSTRUCTION.

Note: If constuction does not commence within one (1) year of date of issuance, or it construction ceases for a period of six (6) months, this permit is void.

Estimated Cost of Work $100,000

Construction Official

Date

PAYMENTS (Office Use Only)

Building	$0
Electrical	$0
Plumbing	$0
Fire Protection	$0
Elevator Devices	$0
Other	$0.00
DCA Training Fee	$0
CO Fee	
Other	$0
Total	$0
Check No.	
Cash	$0
Credit	$0
Collected By	

U.C.C. F170
equiv (rev 8/03)

1 WHITE - INSPECTOR 2 CANARY - OFFICE 3 PINK - TAX ASSESSOR 4 GOLD - APPLICANT

REQUIRED INSPECTIONS

Construction work must be inspected in accordance with the State Uniform Construction Code Regulations N.J.A.C. 5:23-2.18. This agency will carry out such periodic inspections during the progress of work as are necessary to insure that the work installed conforms with the requirements of the Uniform Construction Code.

The owner or other responsible person in charge of work must notify this agency when work is ready for any required inspections specified below. Requests for inspections must be made at least 24 hours prior to the time the inspection is desired. Inspections will be performed within three business days of the time for which they are requested. The work must not proceed in a manner which will preclude the inspection until it has been made and approval granted.

- [ ] Required inspections for all subcodes for one- and two-family dwellings are as follows:

1. The bottom of footing trenches before placement of footings, except that in cases of pile foundations, inspections shall be made in accordance with the requirements of the building subcode.
2. Foundations and all walls up to grade level prior to back filling.
3. All structural framing, connections, wall and roof sheathing and insulation; electrical rough wiring, panel and service installation; rough plumbing. The framing inspection shall take place after the rough electrical and plumbing inspections and after the installation of the heating, ventilation and /or air conditioning duct system. The insulation inspection shall be performed after all other subcode rough inspections and prior to the installation of any interior finish material.
4. Installation of all finished materials, sealings of exterior joints, plumbing piping, trim and fixtures; electrical wiring, devices and fixtures; mechanical systems equipment.

Additional required inspections for all subcodes of construction, for other than one- and two-family dwellings, are fire suppression systems, heat producing devices and Barrier Free subcode accessibility, if applicable.

- [ ] Required special inspections. The applicant by accepting the permit will be deemed to have consented to these requirements:

- [ ] A final inspection is required for each applicable subcode area before a final Certificate of Occupancy or Approval may be issued. The final inspections include the installation of all interior and exterior finish materials, sealing of exterior joints, mechanical system and other required equipment; electrical wiring, devices and fixtures; plumbing pipes, trim and fixtures; tests required by any provision of the adopted subcodes, Barrier Free accessibility, if applicable; and verification of compliance with NJAC 5:23-3.5, "Posting structures".

- [ ] A complete copy of released plans must be kept on the job site.

If you do not understand any of this information, please ask.

CONSTRUCTION PERMIT

Date Issued 08/07/2007
Control # C-07-003625
Permit # 07-2435

IDENTIFICATION Block: 548 Lot: 21 Qualifier
Work Site Location: 41 & 43 DRUM POINT RD. Brick Township, NJ
Owner in Fee: BRICK TOWNSHIP BOARD OF EDUCATION
101 HENDRICKSON AVE BRICK NJ 08723
Telephone: (732) 785-3000

Contractor: NOVA CRETE INC
Address: 1866 ROUTE 35 SOUTH AMBOY NJ 08879
Telephone: (732) 553-0280
Lic. No. or Bldrs. Reg. No.
Federal Employee. No.

Is hereby granted permission to perform the following work:

- ☐ BUILDING
- ☐ PLUMBING
- ☐ LEAD HAZARD ABATEMENT
- ☑ ELECTRICAL
- ☐ FIRE PROTECTION
- ☐ DEMOLITION
- ☐ ELEVATOR DEVICES
- ☐ ASBESTOS ABATEMENT (Subchapter 8 only)
- ☐ OTHER

DESCRIPTION OF WORK:
ALTERATION PLAYGROUND RENOVATIONS

Note: If constuction does not commence within one (1) year of date of issuance, or it construction ceases for a period of six (6) months, this permit is void.
Estimated Cost of Work $100

Construction Official Date

PAYMENTS (Office Use Only)

Building	$0
Electrical	$0
Plumbing	$0
Fire Protection	$0
Elevator Devices	$0
Other	$0.00
DCA Training Fee	$0
CO Fee	
Other	$0
Total	$0
Check No.	
Cash	$0
Credit	$0
Collected By	

U.C.C. F170
equiv (rev 8/03)

1 WHITE - INSPECTOR 2 CANARY - OFFICE 3 PINK - TAX ASSESSOR 4 GOLD - APPLICANT

REQUIRED INSPECTIONS

Construction work must be inspected in accordance with the State Uniform Construction Code Regulations N.J.A.C. 5:23-2.18. This agency will carry out such periodic inspections during the progress of work as are necessary to insure that the work installed conforms with the requirements of the Uniform Construction Code.

The owner or other responsible person in charge of work must notify this agency when work is ready for any required inspections specified below. Requests for inspections must be made at least 24 hours prior to the time the inspection is desired. Inspections will be performed within three business days of the time for which they are requested. The work must not proceed in a manner which will preclude the inspection until it has been made and approval granted.

☐ Required inspections for all subcodes for one- and two-family dwellings are as follows:

1. The bottom of footing trenches before placement of footings, except that in cases of pile foundations, inspections shall be made in accordance with the requirements of the building subcode.
2. Foundations and all walls up to grade level prior to back filling.
3. All structural framing, connections, wall and roof sheathing and insulation; electrical rough wiring, panel and service installation; rough plumbing. The framing inspection shall take place after the rough electrical and plumbing inspections and after the installation of the heating, ventilation and /or air conditioning duct system. The insulation inspection shall be performed after all other subcode rough inspections and prior to the installation of any interior finish material.
4. Installation of all finished materials, sealings of exterior joints, plumbing piping, trim and fixtures; electrical wiring, devices and fixtures; mechanical systems equipment.

Additional required inspections for all subcodes of construction, for other than one- and two-family dwellings, are fire suppression systems, heat producing devices and Barrier Free subcode accessibility, if applicable.

☐ Required special inspections. The applicant by accepting the permit will be deemed to have consented to these requirements:

☐ A final inspection is required for each applicable subcode area before a final Certificate of Occupancy or Approval may be issued. The final inspections include the installation of all interior and exterior finish materials, sealing of exterior joints, mechanical system and other required equipment; electrical wiring, devices and fixtures; plumbing pipes, trim and fixtures; tests required by any provision of the adopted subcodes, Barrier Free accessibility, if applicable; and verification of compliance with NJAC 5:23-3.5, "Posting structures".

☐ A complete copy of released plans must be kept on the job site.

If you do not understand any of this information, please ask.

CA'd
in system
shouldn't be
not in archive
box

Drum & Brick

ELECTRICAL SUBCODE
TECHNICAL SECTION

Date Received Control # 8/31/09

Date Issued Permit # 09-2116

A. IDENTIFICATION—APPLICANT: COMPLETE ALL APPLICABLE INFORMATION. WHEN CHANGING CONTRACTORS, NOTIFY THIS OFFICE. CALL UTILITY DIG NO: 1-800-272-1000.

Block 548 Lot 21 Qualification Code

Work Site Location Drum Point Elementary School
41 Drum Point Road / Brick NJ

Owner in Fee: Brick Township Board of Education

Tel. (732) 786-3000 e-mail www.brickschools.org

Address 101 Hendrickson Avenue (street) Brick NJ (municipality) 08724 (zip code)

Contractor: Brick Board of Ed. Tel. ( )

Address 101 Hendrick Ave e-mail
Brick NJ

Contractor License No. 4699 Exp. Date

Home Improvement Contractor Registration No. or Exemption Reason (if applicable):

Federal Emp. ID No. FAX: ( )

B. ELECTRICAL CHARACTERISTICS

Use Group Present Proposed

[ ] Pole/Pad # [ ] Temporary [ ] Other

Building Occupied as Utility Co.

Est. Cost of Elec. Work $

JOB SUMMARY (Office Use Only)

PLAN REVIEW

[ ] No Plans Required 8-27-9

[ ] Partial -Underslab Utilities Approved

Date: Approved by:

[ ] Electric Plans Approved

Date: Approved by:

Joint Plan Review Required:
[ ] Bldg. [ ] Plumb. [ ] Fire. [ ] Elev.

SUBCODE APPROVAL for PERMIT

Date:

Approved by:

SUBCODE APPROVAL for CERTIFICATE

[ ] CO [ ] CCO [ ] CA

Date: 4-29-10

Approved by: OS

INSPECTIONS Type:	Failure	Failure	Approval	Initial
Rough				
Barrier-Free				
Trench			9-30-09	DD
Temp. Serv.				
Constr. Serv.				
TCO				
Other				
Service				
Final			4-29-10	DD
Barrier-Free				

Dates (Month/Day)

Temp. Cut-in-Card Date Issued

Final Cut-in-Card Date Issued

Annual Pool Inspection

Date of Grounding and Bonding Certification

C. CERTIFICATION IN LIEU OF OATH

I hereby certify that I am the (agent of) owner of record and am authorized to make this application and perform work listed on this application. Alan Eitel SR ELECT. BBOE

Applicant's Signature/Contractor's Seal and Signature

[ ] Licensed Elec. Contractor [ ] Certif'd Landscape Irrigation Cont'r [ ] Exempt Applicant

D. TECHNICAL SITE DATA

DESCRIPTION OF WORK
Connect Electric to New Sign

QTY.	SIZE	ITEMS	FEE (Office Use Only)
		Lighting Fixtures	
		Receptacles	
		Switches	
		Detectors	
		Light Poles	
		Motors—Fract. HP	
		Emergency & Exit Lights	
		Communications Points	
		Alarm Devices/F.A.C. Panel	
		TOTAL NUMBERS	$
		Pool Permit/with UW Lights	
		Storable Pool/Spa/Hot Tub	
		KW Elec. Range/Receptacle	
		KW Oven/Surface Unit	
		KW Elec. Water Heater	
		KW Elec. Dryer/Receptacle	
		KW Dishwasher	
		HP Garbage Disposal	
		KW Central A/C Unit	
		HP/KW Space Heater/Air Handler	
		KW Baseboard Heat	
		HP Motors 1/+ HP	
		KW Transformer/Generator	
		AMP Service	
		AMP Subpanels	
		AMP Motor Control Center	
		KW Elec. Sign/Outline Light	
		.5 KW	
		REPLACEMENT	

Administrative Surcharge $
Minimum Fee $
State Permit Surcharge Fee $
TOTAL FEE $

U.C.C. F120 (rev. 12/07) 1 White = Inspector Copy 2 Canary = Office Copy 3 Pink = Office Copy 4 Gold = Applicant Copy

ELECTRICAL SUBCODE
TECHNICAL SECTION

Date Received 08-07-07
Control #
Date Issued
Permit # 07-2435

A. IDENTIFICATION—APPLICANT: COMPLETE ALL APPLICABLE INFORMATION. WHEN CHANGING CONTRACTORS, NOTIFY THIS OFFICE. CALL UTILITY DIG NO: 1-800-272-1000.

Block 548 Lot 21 Qualification Code
Work Site Location 41 Drum Point Rd Brick NJ 08723

Owner in Fee Township of Brick Board of Ed.
Address ~~401 Chambers Bridge Rd~~ 101 Hendrickson Ave
Brick NJ 08723
Tel (732) ~~262-1057~~ 785-3000
Contractor Elite Electrical Cont.
Address 133 N. 19TH ST
KENILWORTH - NJ
Tel (973) 204-4489 FAX ( )
Contractor License No. 15899
Federal Emp. No. 753230755

B. ELECTRICAL CHARACTERISTICS MUST COMPLY TO A.04

Use Group Present Proposed
[ ] Pole/Pad # [ ] Temporary [ ] Other
Building Occupied as Utility Co.
Est. Cost of Elec. Work $

C. CERTIFICATION IN LIEU OF OATH

I hereby certify that I am the (agent of) owner of record and am authorized to make this application and perform the work listed on this application.

Tedro
Applicant's Signature/Contractor's Seal and Signature

[X] Licensed Elec. Contractor [ ] Certif'd Landscape Irrigation Cont'r. [ ] Exempt Applicant

D. TECHNICAL SITE DATA

QTY	SIZE	ITEMS	FEE (Office Use Only)
4		Lighting Fixtures	
8		Receptacles	
		Switches	
		Detectors	
		Light Poles	
		Motors—Fract. HP	
		Emergency & Exit Lights	
		Communications Points	
		Alarm Devices/F.A.C. Panel	
12		TOTAL NUMBERS	$
		Pool Permit/with UW Lights	
		Storable Pool/Spa/Hot Tub	
		KW Elec. Range/Receptacle	
		KW Oven/Surface Unit	
		KW Elec. Water Heater	
		KW Elec. Dryer/Receptacle	
		KW Dishwasher	
		HP Garbage Disposal	
		KW Central A/C Unit	
		HP/KW Space Heater/Air Handler	
		KW Baseboard Heat	
		HP Motors 1/+ HP	
		KW Transformer/Generator	
1	200	AMP Service	
		AMP Subpanels	
		AMP Motor Control Center	
		KW Elec. Sign/Outline Light	
1		Lighting Cont.	

Administrative Surcharge $
Minimum Fee $
State Permit Surcharge Fee $
TOTAL FEE $

JOB SUMMARY (Office Use Only)

PLAN REVIEW — Date — Initial

[ ] No Plans Required

Joint Plan Review Required:
[ ] Building [ ] Plumbing
[ ] Fire [ ] Elevator
[✓] Elec. Plans Approved

Date: 8 20 07
Approved by:

SUBCODE APPROVAL
[ ] CO [ ] CCO [X] CA
Date: 3 20 08
Approved by:

INSPECTIONS Type:	Failure	Failure	Approval	Initial
Rough				
Barrier-Free				
Trench			8 20 07	
Temp. Serv. Meter Set			12 5 07	
Constr. Serv.				
TCO Service	11 14 07		12 5 07	
Other				
Service Trench			10 11 07	
Final			3 20 08	
Barrier-Free				

Temp. Cut-in-Card Date Issued
Final Cut-in-Card Date Issued 12 5 07
Annual Pool Inspection
Date of Grounding and Bonding Certification

11 30 07 No access

U.C.C. F120 (rev. 07/03) 1 White = Inspector Copy 2 Canary = Office Copy 3 Pink = Office Copy 4 Gold = Applicant Copy

11-14-07

METER BLANK TOP OF METER
METER NOT RATED FOR UNDER GROUND ?
KRUSHED AND BURNED PVC below PANEL
KO SEAL IN PANEL
LUG KIT NEED FOR GROUND IN PANEL

STRAP PVC below GFIS
LOCK COVERS FOR GFIS

BOND BUSHING FOR METER TO PANEL
I & BREAKERS -
STRAP GROUND WIRE TO CONCRETE
2- GROUND RODS - ?

12- -07

12-5-07

METER SET PASSED
U.G. METER INSTALLED

ELECTRICAL SUBCODE
TECHNICAL SECTION

Date Received 05-15-07
Control # 07-3455
Date Issued
Permit #

A. IDENTIFICATION—APPLICANT: COMPLETE ALL APPLICABLE INFORMATION. WHEN CHANGING CONTRACTORS, NOTIFY THIS OFFICE. CALL UTILITY DIG NO: 1-800-272-1000.

Block 548 Lot 21 Qualification Code

Work Site Location 411 Drum Point Rd Brick NJ 08723

Owner in Fee Township of Brick Board of Ed.

Address ~~401 Chambers Bridge Rd~~ 101 Hendrickson Ave Brick NJ 08723

Tel (732) ~~262-1057~~ 785-3000

Contractor Elite Electrical Cont.

Address 133 N. 19TH ST Kenilworth - NJ

Tel (973) 204-4489 FAX ( )

Contractor License No. 15899

Federal Emp. No. 753230755

B. ELECTRICAL CHARACTERISTICS MUST Comply To ADA

Use Group Present Proposed

[ ] Pole/Pad # [ ] Temporary [ ] Other

Building Occupied as Utility Co.

Est. Cost of Elec. Work $

C. CERTIFICATION IN LIEU OF OATH

I hereby certify that I am the agent of owner of record and am authorized to make this application and perform the work listed on this application.

Tedro Allen

Applicant's Signature/Contractor's Seal and Signature

[X] Licensed Elec. Contractor [ ] Certif'd Landscape Irrigation Cont'r [ ] Exempt Applicant

D. TECHNICAL SITE DATA

QTY.	SIZE	ITEMS	FEE (Office Use Only)
4		Lighting Fixtures	
8		Receptacles	
		Switches	
		Detectors	
		Light Poles	
		Motors—Fract. HP	
		Emergency & Exit Lights	
		Communications Points	
		Alarm Devices/F.A.C. Panel	
12		TOTAL NUMBERS	$
		Pool Permit/with UW Lights	
		Storable Pool/Spa/Hot Tub	
		KW Elec. Range/Receptacle	
		KW Oven/Surface Unit	
		KW Elec. Water Heater	
		KW Elec. Dryer/Receptacle	
		KW Dishwasher	
		HP Garbage Disposal	
		KW Central A/C Unit	
		HP/KW Space Heater/Air Handler	
		KW Baseboard Heat	
		HP Motors 1/+ HP	
		KW Transformer/Generator	
1	200	AMP Service	
		AMP Subpanels	
		AMP Motor Control Center	
		KW Elec. Sign/Outline Light	
1		Lighting Cont.	

Administrative Surcharge $
Minimum Fee $
State Permit Surcharge Fee $
TOTAL FEE $

JOB SUMMARY (Office Use Only)

PLAN REVIEW — Date — Initial

[ ] No Plans Required

Joint Plan Review Required:

[ ] Building [ ] Plumbing

[ ] Fire [ ] Elevator

[✓] Elec. Plans Approved

Date: 8-20-07

Approved by:

SUBCODE APPROVAL

[ ] CO [ ] CCO [ ] CA

Date:

Approved by:

INSPECTIONS — Dates (Month/Day)

Type:	Failure	Failure	Approval	Initial
Rough				
Barrier-Free				
Trench				
Temp. Serv.				
Constr. Serv.				
TCO				
Other				
Service				
Final				
Barrier-Free				

Temp. Cut-in-Card Date Issued

Final Cut-in-Card Date Issued

Annual Pool Inspection

Date of Grounding and Bonding Certification

U.C.C. F120 (rev. 07/03) 1 White = Inspector Copy 2 Canary = Office Copy 3 Pink = Office Copy 4 Gold = Applicant Copy

ELECTRICAL SUBCODE
TECHNICAL SECTION

Date Received
Control #
Date Issued
Permit #

A. IDENTIFICATION—APPLICANT: COMPLETE ALL APPLICABLE INFORMATION. WHEN CHANGING CONTRACTORS, NOTIFY THIS OFFICE. CALL UTILITY DIG NO: 1-800-272-1000.

Block 548 Lot 21 Qualification Code

Work Site Location 411 Drum Point Rd Brick NJ 08723

Owner in Fee Township of Brick Board of Ed.

Address ~~401 Chambers Bridge Rd~~ 101 Hendrickson Ave Brick NJ 08723

Tel (732) ~~262-4057~~ 785-3000

Contractor Elite Electrical Cont.

Address 133 N. 19TH ST Kenilworth NJ

Tel (973) 204-4489 FAX ( )

Contractor License No. 15899

Federal Emp. No. 753230755

B. ELECTRICAL CHARACTERISTICS

MUST COMPLY TO ADA

Use Group Present Proposed

[ ] Pole/Pad # [ ] Temporary [ ] Other

Building Occupied as Utility Co.

Est. Cost of Elec. Work $

C. CERTIFICATION IN LIEU OF OATH

I hereby certify that I am the agent or owner of record and am authorized to make this application and perform the work listed on this application.

Applicant's Signature/Contractor's Seal and Signature

[X] Licensed Elec. Contractor [ ] Certified Landscape Irrigation Cont'r [ ] Exempt Applicant

D. TECHNICAL SITE DATA

QTY.	SIZE	ITEMS	FEE (Office Use Only)
4		Lighting Fixtures	
8		Receptacles	
		Switches	
		Detectors	
		Light Poles	
		Motors—Fract. HP	
		Emergency & Exit Lights	
		Communications Points	
		Alarm Devices/F.A.C. Panel	
12		TOTAL NUMBERS	$
		Pool Permit/with UW Lights	
		Storable Pool/Spa/Hot Tub	
		KW Elec. Range/Receptacle	
		KW Oven/Surface Unit	
		KW Elec. Water Heater	
		KW Elec. Dryer/Receptacle	
		KW Dishwasher	
		HP Garbage Disposal	
		KW Central A/C Unit	
		HP/KW Space Heater/Air Handler	
		KW Baseboard Heat	
		HP Motors 1/+ HP	
		KW Transformer/Generator	
1	200	AMP Service	
		AMP Subpanels	
		AMP Motor Control Center	
		KW Elec. Sign/Outline Light	
1		Lighting Cont.	

Administrative Surcharge $
Minimum Fee $
State Permit Surcharge Fee $
TOTAL FEE $

JOB SUMMARY (Office Use Only)

PLAN REVIEW — Date — Initial

[ ] No Plans Required

Joint Plan Review Required:
[ ] Building [ ] Plumbing
[ ] Fire [ ] Elevator
[✓] Elec. Plans Approved

Date: 8/20/04
Approved by:

SUBCODE APPROVAL
[ ] CO [ ] CCO [ ] CA

Date:
Approved by:

INSPECTIONS Type:	Failure	Failure	Approval	Initial
	Dates (Month/Day)			
Rough				
Barrier-Free				
Trench				
Temp. Serv.				
Constr. Serv.				
TCO				
Other				
Service				
Final				
Barrier-Free				

Temp. Cut-in-Card Date Issued
Final Cut-in-Card Date Issued
Annual Pool Inspection
Date of Grounding and Bonding Certification

U.C.C. F120 (rev. 07/03) 1 White = Inspector Copy 2 Canary = Office Copy 3 Pink = Office Copy 4 Gold = Applicant Copy

NOVA CRETE

MAKING A LASTING IMPRESSION

1866 ROUTE 35

SOUTH AMBOY, NJ 08879

TEL: 732-553-0280 FAX:732-553-0061

FACSIMILE TRANSMITTAL SHEET

TO:	FROM:
Tom Olsen/Dan Newman	Peter Frei
COMPANY:	DATE:
Township of Brick	8/2/07
FAX NUMBER:	TOTAL NO. OF PAGES, INCLUDING COVER:
732-262-8954	2
PHONE NUMBER:	RE:
732-262-1090	Drum Point Elementary School

URGENT FOR REVIEW PLEASE COMMENT PLEASE REPLY PLEASE RECYCLE

Tom/Dan,

Please find the following info for 41-43 Drum Point Elementary School Playground improvements:

I attached the Load information as per JCP&L, I hope that this information can help get our permit approved. Should you need anything else please feel free to contact me on my Cell – 732-773-8772.

Best Regards,

Peter Frei
Project Manager
peter@novacrete.com
cell-732-773-8772

Jersey Central Power & Light
A FirstEnergy Company

417 New Jersey Avenue
Point Pleasant Beach, NJ 08742

To: T&M ASSOCIATES
FAX 732-671-7365
ATTN KIRK

Date: 08 / 02 / 07

RE: NOTIFICATION # 316206943

Inquire location: DRUM POINT ELEMENTARY SCHOOL, BRICK NJ

The interrupting duty or fault current for the above location will be:

- under 10,000 Amps
- over 10,000 Amps
- If over 10,000 Amps - your interrupting duty for the specific transformer in question will be _____ Amps (transformer size _____)

playground
07-103625

Debbie Rumney

CC: PETER FREI - NOVA CRETE ✓
732-553-0061

Jersey Central Power & Light
A FirstEnergy Company
417 New Jersey Avenue
Point Pleasant Beach, NJ 08742

Debbie Rumney
Senior Layout Technician
Point Pleasant Line Dept.
732-714-2830
Fax: 732-892-5828

E-Mail: drumney@gpu.com

Bldg [illegible]ct Fire Plumbing (Please mark subcode)

CONTROL NUMBER BG 3625

TOWNSHIP OF BRICK
APPLICATION REVIEW PROCESS

ADDRESS OF APPLICATION: 41 Drum Point Rd

DATE REVIEWED: 7-30-07

REVIEWED BY: FM

CONTACT CALLED/FAXED: 553-0061 @ 12:50

(1) Application Notes "Construction of Gazebo" yet No plans

(2) Also Noted is "Outdoor Amphitheater" The STAIR & Railings must meet Code, and there is No Permit or Details For stair width or Ability To serve O.L.

8/6/07 spoke To Peter @ 9:45

Frank/plan review template

Land Use/ Bldg Dept Fax:732-262-8954

** Transmit Conf. Report **

Jul 30 2007 12:57

P.1

Telephone Number	Mode	Start	Time	Page	Result	Note
732553006 1	NORMAL	30,12:56	0'26"	1	* O K	

(Bldg) Elect Fire Plumbing (Please mark subcode)

CONTROL NUMBER BG 3625

TOWNSHIP OF BRICK
APPLICATION REVIEW PROCESS

ADDRESS OF APPLICATION: 41 Drum Point Rd

DATE REVIEWED: 7-30-07

REVIEWED BY: FM

CONTACT CALLED/FAXED: 553-0061 @ 12:50

(1) Application Notes "Construction of Gazebo"

(2) Also Noted is "Outdoor Amphitheater" The S must meet Code, and there is No Perm Details For Stair width or Agility

Frank/plan review template

PERMIT UPDATE

Date Update Issued 08/07/2007
Control # C-07-003625+A
Permit # 07-2435+A

IDENTIFICATION Block: 548 Lot: 21 Qualifier

Work Site Location: 41 & 43 DRUM POINT RD. Brick Township, NJ

Owner in Fee: BRICK TOWNSHIP BOARD OF EDUCATION
101 HENDRICKSON AVE BRICK NJ 08723

Telephone: (732) 785-3000

Contractor: NOVA CRETE INC
Address: 1866 ROUTE 35 SOUTH AMBOY NJ 08879

Telephone: (732) 553-0280
Lic. No. or Bldrs. Reg. No.
Federal Employee. No.

Is hereby granted permission to perform the following work:

- [x] BUILDING
- [ ] PLUMBING
- [ ] LEAD HAZARD ABATEMENT
- [ ] ELECTRICAL
- [ ] FIRE PROTECTION
- [ ] DEMOLITION
- [ ] ELEVATOR DEVICES
- [ ] ASBESTOS ABATEMENT (Subchapter 8 only)
- [ ] OTHER

DESCRIPTION OF WORK:
PLAYGROUND RENOVATIONS

Note: If constuction does not commence within one (1) year of date of issuance, or it construction ceases for a period of six (6) months, this permit is void.

Estimated Cost of Work $50,000

Construction Official

Date

PAYMENTS (Office Use Only)

Building	$0
Electrical	$0
Plumbing	$0
Fire Protection	$0
Elevator Devices	$0
Other	$0.00
DCA Training Fee	$0
CO Fee	
Other	$0
Total	$0
Check No.	
Cash	$0
Credit	$0
Collected By	

U.C.C. F170
equiv (rev 8/03)

1 WHITE - INSPECTOR 2 CANARY - OFFICE 3 PINK - TAX ASSESSOR 4 GOLD - APPLICANT

REQUIRED INSPECTIONS

Construction work must be inspected in accordance with the State Uniform Construction Code Regulations N.J.A.C. 5:23-2.18. This agency will carry out such periodic inspections during the progress of work as are necessary to insure that the work installed conforms with the requirements of the Uniform Construction Code.

The owner or other responsible person in charge of work must notify this agency when work is ready for any required inspections specified below. Requests for inspections must be made at least 24 hours prior to the time the inspection is desired. Inspections will be performed within three business days of the time for which they are requested. The work must not proceed in a manner which will preclude the inspection until it has been made and approval granted.

- [ ] Required inspections for all subcodes for one- and two-family dwellings are as follows:

1. The bottom of footing trenches before placement of footings, except that in cases of pile foundations, inspections shall be made in accordance with the requirements of the building subcode.
2. Foundations and all walls up to grade level prior to back-filling.
3. All structural framing, connections, wall and roof sheathing and insulation; electrical rough wiring, panel and service installation; rough plumbing. The framing inspection shall take place after the rough electrical and plumbing inspections and after the installation of the heating, ventilation and /or air conditioning duct system. The insulation inspection shall be performed after all other subcode rough inspections and prior to the installation of any interior finish material.
4. Installation of all finished materials, sealings of exterior joints, plumbing piping, trim and fixtures; electrical wiring, devices and fixtures; mechanical systems equipment.

Additional required inspections for all subcodes of construction, for other than one- and two-family dwellings, are fire suppression systems, heat producing devices and Barrier Free subcode accessibility, if applicable.

- [ ] Required special inspections. The applicant by accepting the permit will be deemed to have consented to these requirements:

- [ ] A final inspection is required for each applicable subcode area before a final Certificate of Occupancy or Approval may be issued. The final inspections include the installation of all interior and exterior finish materials, sealing of exterior joints, mechanical system and other required equipment; electrical wiring, devices and fixtures; plumbing pipes, trim and fixtures; tests required by any provision of the adopted subcodes, Barrier Free accessibility, if applicable; and verification of compliance with NJAC 5:23-3.5, "Posting structures".

- [ ] A complete copy of released plans must be kept on the job site.

If you do not understand any of this information, please ask.

BRICK TOWNSHIP PLANNING BOARD

CAPITAL PROJECT APPROVAL RESOLUTION

RESOLUTION R- 45 **-07**

File 2
Clerk
Council
Bus. Adm.
PB Att
PB Eng
Eng
Zoning

July 25, 2007

WHEREAS, the Township of Brick intends to take certain actions necessitating the expenditure of public funds for **The Drum Point School Playground/Drum Point Sports Complex**, including the construction of a gazebo, outdoor amphitheater, playground equipment, outdoor classrooms, area for future playground equipment, 8' wide walkway, landscaping, Special Education drop off area and twenty-three (23) additional parking stalls, on Block 548, Lot 21; and

WHEREAS, pursuant to N.J.S.A. 40:55D-31, this proposed action as described hereinabove was referred to the Planning Board for its recommendation; and

WHEREAS, Robert Gregorio, P.E., of T & M Associates, Township Engineer on this Project, presented to the Planning Board certain information and materials relating to the development and necessity of the expansion of this desirable and well-utilized recreational facility;

NOW, THEREFORE, the Board does, based upon the foregoing information, make the following findings:

1. The proposal is consistent with the Master Plan and in particular those aspects of the Master Plan relating to the development of public facilities and the location thereof.

NOW, THEREFORE, be it resolved by the Brick Township Planning Board on this 25th day of July, 2007, that it favorably recommends the undertaking and completion of this project by the Township of Brick.

July 25, 2007

MOVED BY:

Mr. K. Aiello

SECONDED BY: Mr. F. Dockey

VOTING IN THE AFFIRMATIVE: Mr. S. Petoia, Mrs. J. LaDuke, Mr. F. Dockery, Mr. K. Aiello, Mr. A. Lazroe, Mr. J. Catalano & Mr. F. Underwood

VOTING IN THE NEGATIVE:

INELIGIBLE TO VOTE: Mr. M. Liloia

ABSTAINING:

ABSENT: Mr. B. Reilly, Mr. J. Hahn & Councilwoman Scaturro

CERTIFICATION

I, **JUDITH FOX NELSON**, Clerk of the Planning Board of the Township of Brick, County of Ocean, State of New Jersey, do hereby certify that the foregoing resolution was duly **ADOPTED** by the said Planning Board of the Township of Brick at a regular meeting held on the 25th day of July, 2007.

IN WITNESS WHEREOF, I have set my hand this 27th day of July, 2007.

act. Bd. Sec.

JUDITH FOX NELSON, Clerk
Planning Board of the Township of Brick

Township of Brick

PLOT PLAN REVIEW CHECKLIST

BLOCK 548 LOT 21 DATE RECEIVED 7/19/07

PROPERTY ADDRESS 41 Drum Point Rd

APPLICANT Brick twp. Board of Ed PHONE 732-785-3000

ADDRESS 101 Mendrickson Ave Brick NJ 08723

CONTRACTOR Nova Crete, Inc PHONE 732-553-0280

ADDRESS 1866 Rt 35 South Amboy NJ 08879

TYPE OF WORK Playground Renovation ZONING APPROVAL

FLOOD ZONE FLOOD ELEVATION

PANEL# MAP# DATE

PLANNING BOARD/BOARD OF ADJUSTMENT APPROVAL YES NO

		YES	NO	N/A
1	PLANS/DETAILS SIGNED & SEALED			
2	SCALE OF NOT LESS THAN 1"=50'			
3	EXISTING ELEVATIONS (NGVD IN FLOOD ZONE)			
4	PROPERTY LINES, CORNERS, BEARINGS & DISTANCES			
5	STREET GUTTER, CURB & CENTER LINE ELEVATIONS			
6	CONTOURS 1' INCREMENTS			
7	ADJACENT DWELLING CORNERS & CORNER ELEVATIONS			
8	PROPOSED GRADING & ELEVATIONS			
9	GARAGE FLOOR/CRAWL SPACE/BASEMENT ELEVATION			
10	PROPOSED DWELLING, DIMENSIONS & CORNER ELEVATIONS			
11	METHOD OF DRAINAGE			
12	NORTH ARROW			
13	DRIVEWAY WIDTH & TYPE			
14	DIMENSIONS/ACREAGEOF PARCEL/SETBACK LINES			
15	PROPERTY ADDRESS/BLOCK & LOT NUMBER			
16	SIDEWALK/CURB & APRONS			
17	PARKING AREAS			
18	UTILITY & CONNECTIONS: WATER, SEWER, GAS, ELECTRIC			
19	PLANTINGS, SEEDLINGS, SCREENINGS, FENCES & SIGNS			
20	STREET WIDTH, STREET NAME, RIGHT-OF-WAY WIDTH			
21	LIMITS OF CLEARING			
22	BASEMENT/DEDICATIONS/ENVIROMENTAL CONSTAINTS			
23	PRIOR APPROVALS: ARMY CORP/NJDEP/SOIL EROSION, ETC.			
24	EXISTING STRUCTURES			
25	RETAINING WALL/SERVICE WALKS, OTHER MISC. ITEMS			

PLOT PLAN REVIEW:

APPROVED 7/26/07 REJECTED SIGNED DATE 7/26/07 EC

REVISION:

APPROVED REJECTED SIGNED DATE

COMMENTS:

10.!

Township of Brick
Zoning Permit

Approved: Friday, July 27, 2007 **Number:** 964

Block 528 **Lot** 21 **Zone:** B-2

Property Address: 41 Drum Point Road

Applicant: Nova Crete Inc.

Property Owner: Brick Township Board of Education

Existing Use: Drum Point School

Proposed Use: Drum Point School

Proposed Construction: Construct gazebo, amphitheater, playground equipment and supporting improvements at Drum Point School.

Conditions: All proposed playground improvements at Drum Point Elementary School are to be completed in accordance with Capital Resolution R-45-07 approved by the Planning Board on July 25, 2007 and as shown on the plans prepared by T&M Associates for Drum Point Elementary School Playground Improvements, dated June 20, 2007.

This permit shall be null, void and of no effect if any of the facts contained in the application upon the basis that this permit was granted are false or untrue in any material respect. This permit shall expire one (1) year after the date of issuance if the use or substantial construction has not been commenced.

Michael P. Fowler, AICP/PP
Principal Planner

Sean Kinnevy
Zoning Officer

To!

TOWNSHIP OF BRICK ZONING PERMIT APPLICATION

(Please Type or Print Neatly in Ink, Not Pencil)

Applications missing any of the following information will delay processing and may be returned to you.

BLOCK 548 LOT 21 QUALIFIER

PROPERTY ADDRESS 41 Drum Point Rd. Brick NJ

PERSONAL NAME OF APPLICANT Peter Frei

BUSINESS NAME OF APPLICANT Nova Crete, Inc.

MAILING ADDRESS OF APPLICANT 1866 Rt. 35 South Amboy NJ 08879

PROPERTY OWNER'S FULL NAME Brick Twp. Board of Education

PRESENT USE OF PROPERTY (check all that apply)

☐ Vacant Lot ☐ Single-family dwelling ☐ Multi-family dwelling
☑ Commercial (please describe) School Drum Point School

PROPOSED USE OF PROPERTY (check all that apply)

☐ Vacant Lot ☐ Single-family dwelling ☐ Multi-dwelling
☑ Commercial (please describe) School Drum Point School

PROPOSED CONSTRUCTION (check all that apply)

☐ New Building (please describe) _____ Height _____
☐ Addition - Height _____
☑ Alteration
☐ Porch or deck - Height _____
☐ Shed - Height _____
☐ Fence - Type _____ Height _____
☐ Swimming Pool ☐ in-ground ☐ above-ground
☐ Other (please describe) _____

CHECKLIST

☑ All information completed above
☑ Two (2) copies of a plot plan containing:
☑ All existing and proposed structures
☑ All dimensions of the lot and structures
☑ All setbacks from the structures to the property lines
☑ All adjacent streets and waterways
☑ If applicable, include a copy of the Zoning Board of Adjustment Resolution, the date that the map was signed, and/or the date that the subdivision map was filed with the Ocean County Clerk, along with the file map and number.

Note: No partial, taped, faxed, reduced or enlarged copies can be accepted.

The applicant certifies that all statements and information made and provided as part of this application are true to the best of the applicant's knowledge, information and belief. The applicant further states that the applicant will comply with all other Municipal approvals and ordinances, and all County, State, and Federal Regulations.

SIGNATURE OF APPLICANT _____ Date 7/19/07

Reviewed by Zoning Office _____ Date _____ ( ) Approved ( ) Denied

7/19/07

March 2003

TOWNSHIP OF BRICK

OCEAN COUNTY, NEW JERSEY
401 CHAMBERS BRIDGE ROAD, BRICK, N.J. 08723

Daniel J. Kelly, Mayor

Township Council:
Stephen C. Acropolis - President
Ruthanne Scaturro - Vice President
Anthony Matthews
Kathy M. Russell
Joseph Sangiovanni
Michael A. Thulen, Sr.
Dan Toth

Department of Administration & Finance

Division of Inspections
Daniel F. Newman Jr.
Construction Official
732-262-1027
Fax: 732-262-8954
www.twp.brick.nj.us

Date: 7/19/07

Block: 548 Lot: 21

Property Address: 41 Drum Point Rd Brick NJ 08723

I, Peter Fre (name) of 1866 Rt. 35 South Amboy NJ 08879 (address)
request to be exempt from the plot plan requirement for an addition, fence, shed, deck, pool, retaining wall, ect. as outlined in the Brick Land Use Book, Chapter 190.31, Part B.

Applicant's Signature

The following shall be submitted with this request:

1. Submit surveys locating existing dwelling and proposed addition. Dimensions of the addition should be included.

2. Proof that the property is not located in a Flood Hazard Area.

Note: Prior to approval a site inspection by the Engineering Department will be performed to verify that the proposed addition will not create a drainage problem.

FOR OFFICE USE ONLY

Approved on: 7/27/2007 Signed:

Rejected on: Signed:

Comments:

311 ACCESS BRICK TOWNSHIP

Dan - 7/30/07

Peter from
Nova Crete wants
to sched his elect.
insp. - told the
permit is ready.
Marcel never
reviewed this
yet. Ben

Tom -
after review
give to me.
MLT

7/30/07

Tom -

Please see
Dan @ this
win am 7/31/07

B

This is BT school
property

Bldg Elect Fire Plumbing (Please mark subcode)

CONTROL NUMBER_____

TOWNSHIP OF BRICK
APPLICATION REVIEW PROCESS

ADDRESS OF APPLICATION: 41 Drum Point School

DATE REVIEWED: 7-31-07

REVIEWED BY: Tom Olson

CONTACT CALLED/FAXED:

FAULT CURRENT FROM J.C.P&L

RATING OF PANEL FAULT

Resubmit 08-02-07 Received fat

Frank/plan review template

update 07-24357B

BUILDING SUBCODE
TECHNICAL SECTION

Date Received 8-22-07
Control #
Date Issued
Permit # C07-014105

A. IDENTIFICATION—APPLICANT: COMPLETE ALL APPLICABLE INFORMATION. WHEN CHANGING CONTRACTORS, NOTIFY THIS OFFICE. CALL UTILITY DIG NO: 1-800-272-1000.

Block 548 Lot 21 Qualification Code
Work Site Location 1118 42 Drumpoint Rd
Brick NJ 08723
Owner in Fee Brick Twp Board of Ed.
Address 161 Hendrickson Ave
Brick NJ 08723
Tel. (732) 785-7000
Contractor Nova Const. Inc.
Address 1066 Rt. 35
South Amboy NJ 08723
Tel. (732) 553-0280 FAX (732) 553-0061
Contractor License No. or Builder Registration No. 13VH02843200
Federal Emp. No 061696100

JOB SUMMARY (Office Use Only)

PLAN REVIEW	Date	Initial
[ ] No Plans Required		
[X] All	8-21-07	
[ ] Footing		
[ ] Foundation		
[ ] Frame		
[ ] Other		

Joint Plan Review Required:
[ ] Elec. [ ] Plumb. [ ] Fire [ ] Elevator

SUBCODE APPROVAL
[ ] CO [ ] CCO [ ] CA
Date:
Approved by:

INSPECTIONS Type:	Failure	Dates (Month/Day) Failure	Approval	Initial
Footing				
Footing Bonding				
Foundation				
Slab				
Frame				
Truss Sys./Bracing				
Barrier-Free				
Insulation				
Finishes -Base Layer				
Finishes -Final				
Energy				
Mechanical				
TCO				
Other				
Final				
Barrier-Free				

left MESSAGE Called 8/21

B. BUILDING CHARACTERISTICS

Use Group Present Proposed
Constr. Class Present Proposed
No. of Stories
Height of Structure Ft.
Area — Largest Floor Sq. Ft.
New Bldg. Area/All Floors Sq. Ft.
Volume of New Structure Cu. Ft.
Total Land Area Disturbed Sq. Ft.

Est. Cost of Bldg. Work:
1. New Bldg. $ 100,000
2. Rehabilitation $
3. Total (1+ 2) $

C. CERTIFICATION IN LIEU OF OATH
I hereby certify that I am the (agent of) owner of record and am authorized to make this application.
Signature

D. TECHNICAL SITE DATA

DESCRIPTION OF WORK
Gazebo Construction

TYPE OF WORK:
[ ] New Building
[ ] Addition
[ ] Rehabilitation
[ ] Roofing
[ ] Siding
[ ] Fence Height (exceeds 6')
[ ] Sign Sq. Ft.
[ ] Pool
[ ] Asbestos Abatement Subchapter 8
[ ] Lead Haz. Abatement NJAC 5:17
[ ] Other
[ ] Demolition

FEE (Office Use Only)
$

Administrative Surcharge $
Minimum Fee $
State Permit Surcharge Fee $
TOTAL FEE $

U.C.C. F110 (rev. 07/03)
1 White = Inspector Copy 2 Canary = Office Copy
3 Pink = Office Copy 4 Gold = Applicant Copy

update 07-2435-B

BUILDING SUBCODE
TECHNICAL SECTION

Date Received
Control #

Date Issued 8-22-07
Permit # C07-014105

A. IDENTIFICATION—APPLICANT: COMPLETE ALL APPLICABLE INFORMATION. WHEN CHANGING CONTRACTORS, NOTIFY THIS OFFICE. CALL UTILITY DIG NO: 1-800-272-1000.

Block 12 Lot 21 Qualification Code

Work Site Location [illegible]
Brick NJ 08723

Owner in Fee [illegible]
Address 101 [illegible] Ave
Brick NJ 08723

Tel. (732) 785-3600

Contractor [illegible] Inc.
Address 1516 Rt. 35
South Amboy NJ 08723

Tel. (732) 553-0290 FAX (732) 553-0061

Contractor License No. or Builder Registration No. 13VH02 8413200

Federal Emp. No 061196100

JOB SUMMARY (Office Use Only)

PLAN REVIEW	Date	Initial
[ ] No Plans Required		
[X] All	8-21-07	[illegible]
[ ] Footing		
[ ] Foundation		
[ ] Frame		
[ ] Other		

Joint Plan Review Required:
[ ] Elec. [ ] Plumb. [ ] Fire [ ] Elevator

SUBCODE APPROVAL
[ ] CO [ ] CCO [ ] CA
Date:
Approved by:

INSPECTIONS Type:	Failure	Dates (Month/Day) Failure	Approval	Initial
Footing				
Footing Bonding				
Foundation				
Slab				
Frame				
Truss Sys./Bracing				
Barrier-Free				
Insulation				
Finishes -Base Layer				
Finishes -Final				
Energy				
Mechanical				
TCO				
Other				
Final				
Barrier-Free				

B. BUILDING CHARACTERISTICS

Use Group Present Proposed
Constr. Class Present Proposed
No. of Stories
Height of Structure Ft.
Area — Largest Floor Sq. Ft.
New Bldg. Area/All Floors Sq. Ft.
Volume of New Structure Cu. Ft.
Total Land Area Disturbed Sq. Ft.

Est. Cost of Bldg. Work:
1. New Bldg. $
2. Rehabilitation $
3. Total (1+ 2) $

C. CERTIFICATION IN LIEU OF OATH

I hereby certify that I am the (agent of) owner of record and am authorized to make this application.

Signature

D. TECHNICAL SITE DATA

DESCRIPTION OF WORK
Gazebo Construction

TYPE OF WORK:
[ ] New Building
[ ] Addition
[ ] Rehabilitation
[ ] Roofing
[ ] Siding
[ ] Fence Height (exceeds 6')
[ ] Sign Sq. Ft.
[ ] Pool
[ ] Asbestos Abatement Subchapter 8
[ ] Lead Haz. Abatement NJAC 5:17
[ ] Other
[ ] Demolition

FEE (Office Use Only)
$

Administrative Surcharge $
Minimum Fee $
State Permit Surcharge Fee $
TOTAL FEE $

U.C.C. F110
(rev. 07/03)

1 White = Inspector Copy
2 Canary = Office Copy
3 Pink = Office Copy
4 Gold = Applicant Copy

BUILDING SUBCODE
TECHNICAL SECTION

Date Received Control # 07-2455 HA 08-17-07

Date Issued Permit # 07-0135577

A. IDENTIFICATION—APPLICANT: COMPLETE ALL APPLICABLE INFORMATION. WHEN CHANGING CONTRACTORS, NOTIFY THIS OFFICE. CALL UTILITY DIG NO: 1-800-272-1000.

Block 548 Lot 21 Qualification Code

Work Site Location 111 Drum Point Rd
Brick NJ 08723

Owner in Fee Brick Twp Board of Ed

Address 101 Hendrickson Ave
Brick NJ 08723

Tel. (732) 785-3000

Contractor Dava Crete Inc

Address 1866 Rt 35
South Amboy NJ 08879

Tel. (732) 553-0280 FAX (732) 553-0061

Contractor License No. or Builder Registration No. 13VH02843200

Federal Emp. No 061696100

JOB SUMMARY (Office Use Only)

PLAN REVIEW	Date	Initial
[ ] No Plans Required		
[X] All	8-6-07	
[ ] Footing		
[ ] Foundation		
[ ] Frame		
[ ] Other		

Joint Plan Review Required:
[ ] Elec. [ ] Plumb. [ ] Fire [ ] Elevator

SUBCODE APPROVAL
[ ] CO [ ] CCO [ ] CA
Date:
Approved by:

INSPECTIONS Type:	Failure	Dates (Month/Day) Failure	Approval	Initial
Footing				
Footing Bonding				
Foundation				
Slab				
Frame				
Truss Sys./Bracing				
Barrier-Free				
Insulation				
Finishes -Base Layer				
Finishes -Final				
Energy				
Mechanical				
TCO				
Other				
Final				
Barrier-Free				

B. BUILDING CHARACTERISTICS

Use Group Present Proposed
Constr. Class Present Proposed
No. of Stories
Height of Structure Ft.
Area — Largest Floor Sq. Ft.
New Bldg. Area/All Floors Sq. Ft.
Volume of New Structure Cu. Ft.
Total Land Area Disturbed Sq. Ft.

Est. Cost of Bldg. Work:
1. New Bldg. $
2. Rehabilitation $
3. Total (1+ 2) $

C. CERTIFICATION IN LIEU OF OATH

I hereby certify that I am the (agent of) owner of record and am authorized to make this application.

Signature

D. TECHNICAL SITE DATA

DESCRIPTION OF WORK
Playground Renovations

MUST meet All A.D.A Requirements

TYPE OF WORK:
[ ] New Building
[ ] Addition
[ ] Rehabilitation
[ ] Roofing
[ ] Siding
[ ] Fence Height (exceeds 6')
[ ] Sign Sq. Ft.
[ ] Pool
[ ] Asbestos Abatement Subchapter 8
[ ] Lead Haz. Abatement NJAC 5:17
[ ] Other
[ ] Demolition

FEE (Office Use Only)
$

Administrative Surcharge $
Minimum Fee $
State Permit Surcharge Fee $
TOTAL FEE $

U.C.C. F110 (rev. 07/03)

1 White = Inspector Copy
2 Canary = Office Copy
3 Pink = Office Copy
4 Gold = Applicant Copy

ICON Shelter Systems Inc

7900 Logistic Drive Suite C
Zeeland, Michigan 49464
(616) 748-0985

Structural Calculations

Job Number: 2552

Building Code: International Building Code

Building Name: CC34M2C-P4-20-120-30

Roof Pitch: 4.00/12

Primary Roof: M - Multi-rib panel roof

9-21-07 PM

AMERICAN INSTITUTE OF STEEL CONSTRUCTION INC
AISC
FOUNDED 1921
PROFESSIONAL MEMBER

DAVID S. DAYTON, III
NEW JERSEY PROFESSIONAL ENGINEER
N.J. LICENSE #: GE-41813
SIGNATURE:
DATE: 8/13/07

TABLE OF CONTENTS

1. Structural Description

2. Design Criteria

3. Materials

4. Loads to the Foundation

5. Member and Connection Design

6. Computer Analysis Print Out

STRUCTURE DESCRIPTION

The structure was modeled using Robot Millenium structural analysis software. It was modeled as a cantilevered column system with column bases fixed and all rotational restraint released at the beam to column connections. Also purlins were modeled with pinned connections at each end. Other connections were modeled as moment connections.

The roof deck was not utilized in the structural analysis except to provide lateral support to the rafters and purlins for gravity loads. For members subjected to bending and or axial loads due to wind uplift loads, the unbraced lengths of the members were defined as the distance between braced points or the full span if not braced between supports.

Vertical loads were applied to the frame by loading the roof panel with a unit load and loading the tie beams and purlins with the resulting reaction. This procedure results in the member being loaded with a tributary area per unit length. This allows a simple load combination to be produced by applying a load factor equal to the load pressure. These simple load combinations were created for Dead load and Snow Load by specifying a negative pressure in the Z direction. They were created for Uplift components of wind load by specifying a positive pressure in the Z direction. Lastly they were created for Seismic loads by specifying a positive or negative pressure in the X or Y direction.

Horizontal loads were applied to the frame by calculating the tributary area of the structure's horizontal profile and applying these areas to the nodes. This also results in the frame being loaded with a tributary area. Simple load cases are then created in the same mannor as the vertical loads. These simple load cases are created for the horizontal components of the wind loads.

Design load combinations are then created by combining these simple load combinations in the manner the prescribed building code dictates.

From the analysis, all member deflections and nodal displacements are within allowable limits.

Member design envelopes are created by collecting every group of internal forces resulting from every design combination at five locations along the member and examining each one to find the one group that contains the largest value for each force element such as axial, shear or moment.

Connection design envelopes are created in the same way but only considering the location of the member at which that connection occurs.

End plates are designed by applying beam end forces to the edges of the plate and calculating the resulting prying moment at the edge of the bolt holes. In determining the prying moment it is assumed that the area of the plate between bolts is fixed.

All field connections are made with A-325 high strength bolts and are specified as snug tight connections.

DESIGN CRITERIA

BUILDING CODE

International Building Code

DEAD LOADS

Total Dead Load (psf) = 8.14
Frame Weight (psf) = 5.14
Roofing Load (psf) = 1.2
Collateral Load (psf) = 1.80

SNOW LOADS/ROOF LIVE LOADS

Lr = Roof Live Load (psf) = 20	
Pg = Ground snow Load (psf) = 20.00	
Ct = Roof thermal Factor = 1.20	ASCE-7, Table 7-3
Ce = Snow exposure coefficient = 1.00	ASCE-7, Table 7-2
I = Occupancy importance factor = 1.00	ASCE-7, Table 7-4
Cs = Roof slope Factor = 1.00	ASCE-7, Figure 7-2
Pf = Flat Roof snow Load (psf) = 20.00	ASCE-7, Eq 7-1
Ps = Roof snow Load (psf) = 20.00	ASCE-7, Eq 7-2

WIND LOADS

Enclosure = Open\Unenclosed	
Basic Wind Speed (mph) = 120.00	
Exposure classification = C	
Mean Roof Height (ft) = 15.00	
P = qzGCf	ASCE 7, Section 6.5.13
qz = Basic wind Pressure (qz = 0.00256KzKztKd(V^2)I = 26.60 psf	ASCE 7, Section 6.5.10
I = 1.00	ASCE 7, Table 6-1
Kd = 0.85	ASCE 7, Table 6-4
Kz = 0.85	ASCE-7, Table 6-3
Kzt = 1.00	ASCE-7, Section 6.5.7
G = 0.85	ASCE-7, Section 6.5.8
Projected plane normal to wind Cf = 1.30; P = 29.39 psf	
Projected plane parallel to wind Cf = 0.70; P = 15.83 psf	

SEISMIC LOADS

Structure Type: Cantelevered Column Construction (Steel)	
Occupancy Importance Factor (I) = 1.00	ASCE-7, Table 6-1
Seismic Use Group = I	ASCE-7, Table 9.1.3
Seismic Site Class = D	ASCE-7, Table 9.4.1.2
Seismic Design Category = B	ASCE-7, Table 9.4.2.1a
Dead Load of Structure = 8.14 psf	
R = Response modification factor = 1.25	ASCE-7, Table 9.5.2.2
Sds = Design spectral response Acceleration = 0.31	ASCE-7, Eq 9.4.1.2.5-1
Cs = Seismic response coefficient = 0.25	ASCE-7, Eq 9.5.5.2.1-1
V = Max seismic base shear (psf) = 2.03	ASCE-7, Eq. 9.5.5.2.1

LOAD COMBINATIONS

ASCE-7, Section 2.4

1. D
2. D + Lr
3. D + S
4. D + 0.75(Lr or S)
5. D + W or 0.7E
6. D + 0.75(W or 0.7E) + 0.75(Lr or S)
7. 0.6D + W
8. 0.6D + 0.7E

MATERIALS

Plate steel: ASTM A36

High Strength Bolts: ASTM A325

Welding Process: GMAW

Welding Electrode: ER70S-X

Member steel: ASTM A500 Grade B

Member Title	Section	Count	Bar List
CL1	HSS5X5X0.1875	8	1to8
RF2	HSS5X5X0.125	8	49to56
RT1	HSS5X3X0.125	8	81to88
RT2	HSS5X3X0.125	8	89to96
RS1	HSS5X5X0.1875	8	33to40
TB1	HSS6X4X0.125	8	9to16
TB2	HSS4X4X0.125	8	41to48
PU1	HSS4X4X0.125	8	57to64
PU2	HSS4X4X0.125	8	25to32
PU3	HSS4X4X0.125	8	65to72
RFRS1	HSS5X5X0.125	8	17to24

LOADS TO THE FOUNDATION

The Table(s) below represent the loads to the foundation from an individual column. Individual columns are grouped by similar loadings. All loads are given in a coordinate system local to the column. The Y axis is the strong axis of the column and the Z axis is the weak axis. The Positive Z axis points toward the inside of the building.

DL = Service level dead load reaction with the greatest axial load
SL = Service level snow load reaction with the greatest axial load
W-uplift = Service level wind load reaction with the greatest uplift load
W-Y = Service level wind load reaction with the greatest magnitude of shear in the local Y direction
W-Z = Service level wind load reaction with the greatest shear value acting in the same direction as the DL shear load.
E-Y = Service level seismic load reaction with the greatest magnitude of shear in the local Y direction
E-Z = Service level seismic load reaction with the greatest magnitude of shear in the local Z direction

Column	Label	Fx (Kip)	Fy (Kip)	Fz (Kip)	My(Kip-in)	Mz(Kip-in)
CL1	DL	0.83	0.00	0.00	-0.34	0.00
CL1	SL	2.31	0.00	0.01	-1.08	0.00
CL1	W-UPLIFT	-1.95	0.31	-0.12	13.45	33.23
CL1	W-FY	-1.95	-0.31	-0.12	13.45	-33.23
CL1	W-FZ	-1.82	-0.13	-0.32	34.82	-14.03
CL1	E-FY	-0.02	-0.22	-0.09	10.05	-24.21
CL1	E-FZ	-0.05	-0.09	-0.22	24.26	-10.03

ICON Shelter Systems Inc

ICON STRUCTURE: CC34M2C-P4-20-120-30-CL1

Foundation Design (Flag Pole Type)

Size the footing based on service loads

	COMBO	Fx	Fy	Fz	My	Mz	Mr	Fr
Max Fx	MC|ASCE(2.4.1.3)S	3.14657	0	0.00697	-1.42455	0	1.42455	0.00697
Min Fx	MC|ASCE(2.4.1.7)WY	-1.45344	-0.30772	-0.12081	13.243	-33.2335	35.77486	0.330585
Max Fy	MC|ASCE(2.4.1.5)WY	-1.12057	0.30772	-0.12044	13.10603	33.23347	35.72438	0.33045
Min Fy	MC|ASCE(2.4.1.7)WY	-1.45344	-0.30772	-0.12081	13.243	-33.2335	35.77486	0.330585
Max Fz	MC|ASCE(2.4.1.5)WY	-0.87515	-0.12353	0.29495	-31.7559	-13.341	34.44441	0.319774
Min Fz	MC|ASCE(2.4.1.7)WY	-1.32288	-0.12991	-0.31867	34.61165	-14.0302	37.3472	0.344132
Max Mx	MC|ASCE(2.4.1.5)EX	0.85264	0.22429	0.09402	-10.3906	24.21067	26.34619	0.243199
Min Mx	MC|ASCE(2.4.1.5)EY	0.81171	-0.22429	-0.09216	9.70576	-24.2107	26.08368	0.242486
Max My	MC|ASCE(2.4.1.7)WY	-1.32288	0.12991	-0.31867	34.61165	14.03023	37.3472	0.344132
Min My	MC|ASCE(2.4.1.5)WY	-0.87515	0.12353	0.29495	-31.7559	13.34101	34.44441	0.319774
Max Mz	MC|ASCE(2.4.1.5)WY	-1.12057	0.30772	-0.12044	13.10603	33.23347	35.72438	0.33045
Min Mz	MC|ASCE(2.4.1.7)WY	-1.45344	-0.30772	-0.12081	13.243	-33.2335	35.77486	0.330585

FIND THE PRELIMINARY DEPTH OF THE FOOTING (UNCONSTRAINED)

D =	4.50 FT	Depth of footing		
B =	2 FT	Diameter of footing	V =	14.14 FT^3
OTSF =	1	Additional Overturning safety factor		
M =	3.11 FT-K	Design Moment		
P =	0.34 K	Applied lateral force on the column to cause the design moment		
H =	9.04 FT	The height at which P is applied to cause the design moment		
S1 =	300.00 PSF	allowable lateral bearing pressure S =		200
Dreq =	4.42 FT	The actual depth required		

$$Dreq = \frac{1.18 * P}{B * S1} * \left(1 + \sqrt{1 + \frac{1.88 * B * S1 * H}{P}}\right)$$

FIND THE PRELIMINARY DEPTH OF THE FOOTING (CONSTRAINED)

D =	3.33 FT	Depth of footing		
B =	2 FT	Diameter of footing	V =	10.47 FT^3
OTSF =	1	Additional Overturning safety factor		
M =	3.11 FT-K	Design Moment		
P =	0.34 K	Applied lateral force on the column to cause the design moment		
H =	9.04 FT	The height at which P is applied to cause the design moment		
S3 =	666.67 PSF	allowable lateral bearing pressure S =		200
Dreq =	3.15 FT	The actual depth required		

$$Dreq = \left(\sqrt{4.25 * \frac{P * h}{S_3 * b}}\right)$$

CALCULATE THE RESISTANCE TO VERTICAL FORCES DUE TO FRICTION

It is assumed that the soil is cohesionless for a conservative design

	Unconstrained	Constrained	
G =	120 PCF	120 PCF	Unit weight of soil
K =	0.5	0.5	Coefficient of lateral earth pressure
Pr =	6.28 FT	6.28 FT	Perimeter of base of footing
FA =	30 DEG	30 DEG	Friction Angle
Qu =	2.20 K	1.21 K	Resistance due to friction

$$Qu = \frac{1}{2} * G * D^2 * K * P * \tan(FA)$$

CALCULATE MAX BEARING PRESSURE

	Unconstrained		Constrained	
Wf =	2.12 K	Weight of footing	1.57 K	
FXmax =	3.15 K	Max vertical downward force	3.15 K	
FXmax + Wf - Qu =	3.06		3.51	
Qb =	0.98 KSF	< Qallowable (OK)	1.12 KSF	< Qallowable (OK)
Qallowable =	1.5 KSF		1.5 KSF	

CALCULATE RESISTANCE TO UPLIFT

	Unconstrained		Constrained	
Wf =	2.12 K	Weight of footing	1.57 K	Weight of footing
Fxmin =	-1.45344 K	Greatest uplift force	-1.45344 K	Greatest uplift force
Wf + Qu =	4.32		2.78	
1.5* Fxmin =	-2.18016	(OK)	-2.18016	(OK)

CALCULATE MOMENT IN FOUNDATION

Moment in foundation is determined from factored loads

	COMBO	FX	FY	FZ	MY	MZ	MR	FR
Max Fx	B|ASCE(2.3.2.3)WY	3.33578	0.24599	-0.09882	10.67281	27.27305	29.287	0.265097
Min Fx	B|ASCE(2.3.2.6)WY	-2.37544	-0.19335	-0.49235	53.17355	21.20935	57.24738	0.528954
Max Fy	B|ASCE(2.3.2.4)WY	-0.96859	-0.19005	0.49235	53.17355	20.56556	57.012	0.527757
Min Fy	B|ASCE(2.3.2.6)WY	-2.37544	-0.19335	-0.49235	53.17355	21.20935	57.24738	0.528954
Max Fz	B|ASCE(2.3.2.4)WY	-0.57592	0.47457	-0.19764	21.34562	51.21346	55.48382	0.51408
Min Fz	B|ASCE(2.3.2.6)WY	-2.16654	-0.50992	-0.20786	22.44837	55.39919	59.77457	0.550658
Max Mx	B|ASCE(2.3.2.5)EX	1.48195	0.09541	0.22429	24.21067	10.67553	26.45985	0.24374
Min Mx	B|ASCE(2.3.2.7)EY	0.72849	-0.09225	-0.22429	24.21067	9.74	26.09644	0.24252
Max My	B|ASCE(2.3.2.6)WY	-2.16654	-0.50992	0.20786	22.44837	55.39919	59.77457	0.550658
Min My	B|ASCE(2.3.2.4)WY	-0.57592	0.47457	0.19764	21.34562	51.21346	55.48382	0.51408
Max Mz	B|ASCE(2.3.2.4)WY	-0.96859	-0.19005	0.49235	53.17355	20.56556	57.012	0.527757
Min Mz	B|ASCE(2.3.2.6)WY	-2.37544	-0.19335	-0.49235	53.17355	21.20935	57.24738	0.528954

Moment at the base is

M = 59.77 IN-K

Convert to a lateral load applied at a distance H above the base

P =	0.55 K	Mu = P(H + 0.34*D)	
H =	108.55 IN	Unconstrained	Constrained
Mu =	69.88 IN-K	69.88 IN-K	67.26 IN-K
Ag =	452.39 IN^2		
Mu/Agh =	0.01 K/IN^2		
Pu/Ag =	0.01 K/IN^2		
from interaction diagram			
pg =	minimum required		
p =	0.0018		
As =	0.81		
Long bar size =	5		

UNCONSTRAINED DESIGN

Depth 54 inches

Diameter 24 inches

Use 4 #5 longitudinal bars

Use 6 #4 ties, with one additional tie around anchor bolts.

CONSTRAINED DESIGN

Depth 40 inches

Diameter 24 inches

Use 4 #5 bars longitudinal bars

Use 5 #4 ties, with one additional tie around anchor bolts

**If shelter is to be installed without a slab the unconstrained design must be used.

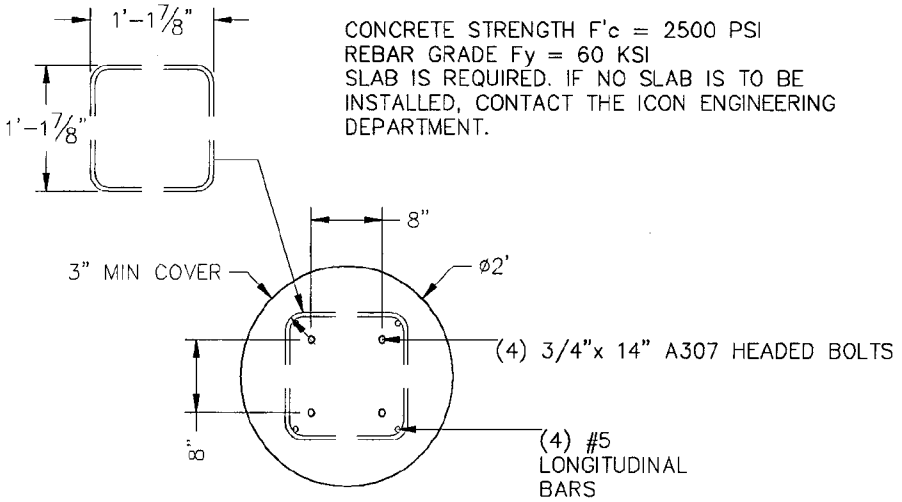

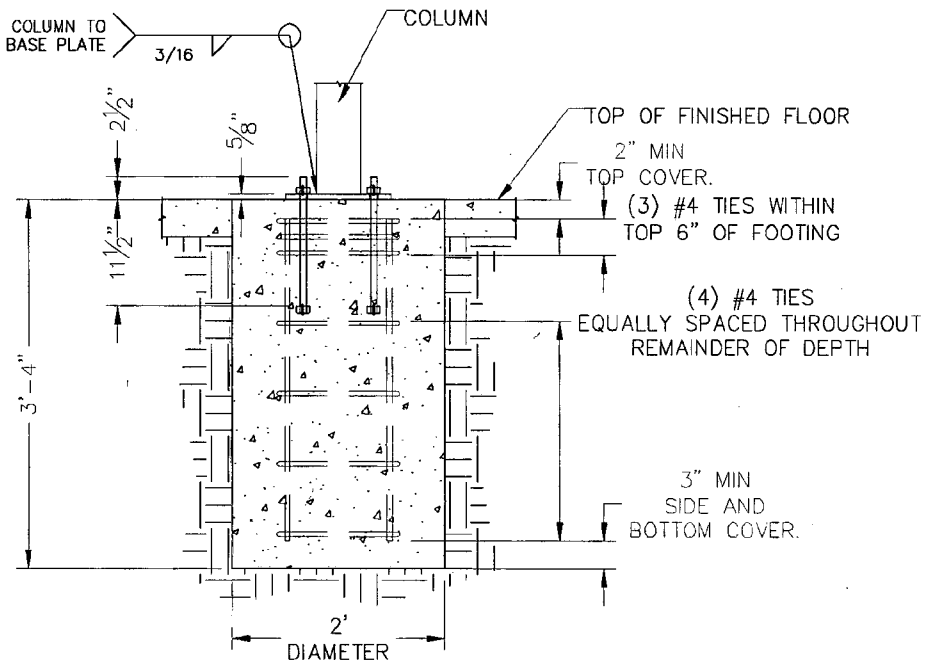

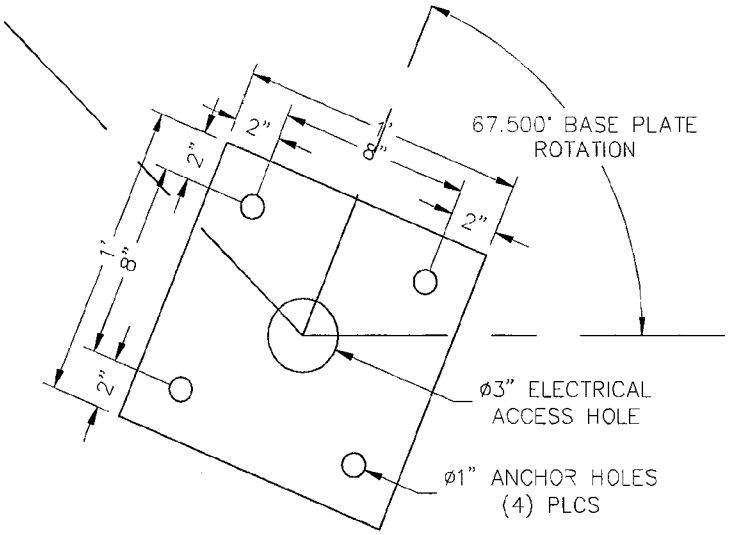

BASE PLATE MATERIAL
5/8"THICK HRF, Fy=36 ksi

DRAWING NO: –

DATE: –

ICON
Shelter Systems Inc
7900 LOGISTICS DR. SUITE C.
ZEELAND MI, 49464
PHONE: 616.748.0985, 800.748.0985
FAX: 616.748.0995
DISTINCTIVE STEEL SHELTERS
WWW.ICONSHELTERS.COM
COPYRIGHT 2004. ICON SHELTER SYSTEMS, INC.

CL1 Column

Title:	CL1
Count:	8
Horizontal Angle Start end:	0.00
Horizontal Angle Finish end:	0.00
Vertical Angle Start end:	0.00
Vertical Angle Finish end:	-17.12
Ky	2.10
Kz	2.10
L(ft)	9.00
Ly(ft)	9.00
Lz(ft)	9.00

Section Properties

Name	HSS5X5X0.187
Depth (in)	5.00
Width (in)	5.00
Nominal Thickness (in)	0.19
Design Thickness (in)	0.17
Area (in^2)	3.28
MOI Strong (in^4)	12.60
MOI weak (in^4)	12.60
Section Mod. Strong (in^3)	5.03
Section Mod. Weak (in^3)	5.03
Fy (ksi)	46

Design Envelope

Label	C. Name	C. Num	Rbt. Num.	Bar	Location	Fx (K)	Fy (K)	Fz (K)	My (K-in)	Mz (K-in)	Allow. Increase
Max Fx	MC|ASCE(2.4.1.3)S	16	1	1	3.15	0.00	0.01	-1.42	0.00	0.00
Min Fx	MC|ASCE(2.4.1.7)WY	26	4	5	-1.51	-0.31	-0.12	0.20	0.00	0.00
Max Fy	MC|ASCE(2.4.1.5)WY	18	1	1	-1.12	0.31	-0.12	13.11	33.23	0.00
Min Fy	MC|ASCE(2.4.1.7)WY	26	4	5	-1.51	-0.31	-0.12	0.20	0.00	0.00
Max Fz	MC|ASCE(2.4.1.5)WY	18	6	1	-0.88	-0.12	0.29	-31.76	-13.34	0.00
Min Fz	MC|ASCE(2.4.1.7)WY	26	3	5	-1.38	-0.13	-0.32	0.20	0.00	0.00
Max Mx	MC|ASCE(2.4.1.5)EX	19	2	1	0.85	0.22	0.09	-10.39	24.21	0.00
Min Mx	MC|ASCE(2.4.1.5)EY	20	8	5	0.71	-0.22	-0.09	-0.25	0.01	0.00
Max My	MC|ASCE(2.4.1.7)WY	26	2	1	-1.32	0.13	-0.32	34.61	14.03	0.00
Min My	MC|ASCE(2.4.1.5)WY	18	7	1	-0.88	0.12	0.29	-31.76	13.34	0.00
Max Mz	MC|ASCE(2.4.1.5)WY	18	1	1	-1.12	0.31	-0.12	13.11	33.23	0.00
Min Mz	MC|ASCE(2.4.1.7)WY	26	4	1	-1.45	-0.31	-0.12	13.24	-33.23	0.00

Compactness: Compact

Member Design Results

Label	C. Name	fa	Fa	fby	Fby	fbz	Fbz	F'ey	F'ez	Stress Ratio	Allow Increa	ASD OK
Min My	MC|ASCE(2.4.1.5)WY	0.27	27.60	6.31	30.36	2.65	30.36	11.15	11.15	0.31	0.00	True
Max Mz	MC|ASCE(2.4.1.5)WY	0.34	27.60	2.61	30.36	6.61	30.36	11.15	11.15	0.32	0.00	True
Min Mz	MC|ASCE(2.4.1.7)WY	0.44	27.60	2.63	30.36	6.61	30.36	11.15	11.15	0.32	0.00	True
Max Fx	MC|ASCE(2.4.1.3)S	0.96	11.15	0.28	30.36	0.00	30.36	11.15	11.15	0.10	0.00	True
Min Fx	MC|ASCE(2.4.1.7)WY	0.46	27.60	0.04	30.36	0.00	30.36	11.15	11.15	0.02	0.00	True
Max Fy	MC|ASCE(2.4.1.5)WY	0.34	27.60	2.61	30.36	6.61	30.36	11.15	11.15	0.32	0.00	True
Min Fy	MC|ASCE(2.4.1.7)WY	0.46	27.60	0.04	30.36	0.00	30.36	11.15	11.15	0.02	0.00	True
Max Fz	MC|ASCE(2.4.1.5)WY	0.27	27.60	6.31	30.36	2.65	30.36	11.15	11.15	0.31	0.00	True
Min Fz	MC|ASCE(2.4.1.7)WY	0.42	27.60	0.04	30.36	0.00	30.36	11.15	11.15	0.02	0.00	True
Max Mx	MC|ASCE(2.4.1.5)EX	0.26	11.15	2.07	30.36	4.81	30.36	11.15	11.15	0.25	0.00	True
Min Mx	MC|ASCE(2.4.1.5)EY	0.22	11.15	0.05	30.36	0.00	30.36	11.15	11.15	0.02	0.00	True
Max My	MC|ASCE(2.4.1.7)WY	0.40	27.60	6.88	30.36	2.79	30.36	11.15	11.15	0.33	0.00	True

CL1 I end - Base Plate Connection

BASE PLATE						
	Width(in)	12.00	Y edge(in)	2.00	Depth(in)	5.00
	Length(in)	12.00	Z edge(in)	2.00	Width(in)	5.00
	Thick(in)	0.63	Bolt Count	4	Weld	0.19
	Hole Dia.(in)	1.00			Weld Type	Fillet

PEDISTAL						
	Bolt Count	4	Use L bolts	False	Pedistal Length(in)	48.00
	Bolt Dia(in)	0.75	L Bolt Leg Length(in)	0.00	Pedistal Width(in)	48.00
	Fu(psi)	58,000.00	Embedment(in)	10.00	F'c(psi)	2,500.00
	Fy(psi)	36,000.00	Y spacing(in)	8.00		
			Z spacing(in)	8.00		

Design Envelope

Label	C. Name	C. Num	Rbt. Num.	Bar	Location	Fx (K)	Fy (K)	Fz (K)	My (K-in)	Mz (K-in)	Allow. Increase
Max Fx	B|ASCE(2.3.2.3)WY	32	6	1	3.34	-0.10	0.25	-27.27	-10.67	0.00
Min Fx	B|ASCE(2.3.2.6)WY	38	4	1	-2.38	-0.49	-0.19	21.21	-53.17	0.00
Max Fy	B|ASCE(2.3.2.4)WY	34	1	1	-0.97	0.49	-0.19	20.57	53.17	0.00
Min Fy	B|ASCE(2.3.2.6)WY	38	4	1	-2.38	-0.49	-0.19	21.21	-53.17	0.00
Max Fz	B|ASCE(2.3.2.4)WY	34	6	1	-0.58	-0.20	0.47	-51.21	-21.35	0.00
Min Fz	B|ASCE(2.3.2.6)WY	38	3	1	-2.17	-0.21	-0.51	55.40	-22.45	0.00
Max Mx	B|ASCE(2.3.2.5)EX	35	2	1	1.48	0.22	0.10	-10.68	24.21	0.00
Min Mx	B|ASCE(2.3.2.7)EY	40	8	1	0.73	-0.22	-0.09	9.74	-24.21	0.00
Max My	B|ASCE(2.3.2.6)WY	38	2	1	-2.17	0.21	-0.51	55.40	22.45	0.00
Min My	B|ASCE(2.3.2.4)WY	34	7	1	-0.58	0.20	0.47	-51.21	21.35	0.00
Max Mz	B|ASCE(2.3.2.4)WY	34	1	1	-0.97	0.49	-0.19	20.57	53.17	0.00
Min Mz	B|ASCE(2.3.2.6)WY	38	4	1	-2.38	-0.49	-0.19	21.21	-53.17	0.00

BASE CONNECTION RESULTS

Label	C. Num	B. Shear Limit State Vn Bolt (K)	Vu Bolt (K)	Tn Bolt (K)	B. Ten Limit State Tu Bolt (K)	Bolt Interaction	Vn Weld (K/in)	Vu Weld (K/in)	Tn Weld (K/in)	Tu Weld (K/in)	Weld Throat req (in)	Muy Plate (K-in)	Muz Plate (K-in)	Plate Thick Req (in)	Plate Thick Act. (in)	Check
Max Fx	32	BreakOut 31.86	0.25	PullOut 12.75	1.54	0.13	5.91	0.01	6.08	1.14	0.04	2.61	0.00	0.16	0.63	True
Min Fx	38	Fastener 12.72	0.13	PullOut 12.75	5.24	0.42	5.91	0.03	6.08	2.23	0.07	5.76	11.75	0.35	0.63	True
Max Fy	34	Fastener 12.72	0.13	PullOut 12.75	4.85	0.39	5.91	0.03	6.08	2.21	0.07	4.58	10.70	0.33	0.63	True
Min Fy	38	Fastener 12.72	0.13	PullOut 12.75	5.24	0.42	5.91	0.03	6.08	2.23	0.07	5.76	11.75	0.35	0.63	True
Max Fz	34	BreakOut 31.86	0.47	PullOut 12.75	4.68	0.38	5.91	0.03	6.08	2.18	0.07	10.03	4.43	0.32	0.63	True
Min Fz	38	BreakOut 31.86	0.51	PullOut 12.75	5.41	0.44	5.91	0.03	6.08	2.34	0.07	12.01	5.83	0.35	0.63	True
Max Mx	35	Fastener 12.72	0.06	PullOut 12.75	1.81	0.15	5.91	0.01	6.08	1.05	0.03	0.89	3.43	0.19	0.63	True
Min Mx	40	Fastener 12.72	0.06	PullOut 12.75	1.94	0.16	5.91	0.01	6.08	1.02	0.03	1.28	3.99	0.20	0.63	True
Max My	38	BreakOut 31.86	0.51	PullOut 12.75	5.41	0.44	5.91	0.03	6.08	2.34	0.07	12.01	5.83	0.35	0.63	True
Min My	34	BreakOut 31.86	0.47	PullOut 12.75	4.68	0.38	5.91	0.03	6.08	2.18	0.07	10.03	4.43	0.32	0.63	True
Max Mz	34	Fastener 12.72	0.13	PullOut 12.75	4.85	0.39	5.91	0.03	6.08	2.21	0.07	4.58	10.70	0.33	0.63	True
Min Mz	38	Fastener 12.72	0.13	PullOut 12.75	5.24	0.42	5.91	0.03	6.08	2.23	0.07	5.76	11.75	0.35	0.63	True

PU1 Purlin

Title:	PU1
Count:	8
Horizontal Angle Start end:	21.45
Horizontal Angle Finish end:	-21.45
Vertical Angle Start end:	-6.95
Vertical Angle Finish end:	6.95
Ky	1.00
Kz	1.00
L(ft)	8.42
Ly(ft)	3.00
Lz(ft)	3.00

Section Properties

Name	HSS4X4X0.125
Depth (in)	4.00
Width (in)	4.00
Nominal Thickness (in)	0.13
Design Thickness (in)	0.12
Area (in^2)	1.77
MOI Strong (in^4)	4.40
MOI weak (in^4)	4.40
Section Mod. Strong (in^3)	2.20
Section Mod. Weak (in^3)	2.20
Fy (ksi)	46

Design Envelope

Label	C. Name	C. Num	Rbt. Num.	Bar	Location	Fx (K)	Fy (K)	Fz (K)	My (K-in)	Mz (K-in)	Allow. Increase
Max Fx	MC|ASCE(2.4.1.3)S	16	57	1	1.93	0.12	0.37	0.00	0.00	0.00
Min Fx	MC|ASCE(2.4.1.7)WY	26	58	5	-0.92	0.07	0.20	0.00	0.00	0.00
Max Fy	MC|ASCE(2.4.1.3)S	16	57	1	1.93	0.12	0.37	0.00	0.00	0.00
Min Fy	MC|ASCE(2.4.1.3)S	16	64	5	1.93	-0.12	-0.37	0.00	0.00	0.00
Max Fz	MC|ASCE(2.4.1.3)S	16	57	1	1.93	0.12	0.37	0.00	0.00	0.00
Min Fz	MC|ASCE(2.4.1.3)S	16	64	5	1.93	-0.12	-0.37	0.00	0.00	0.00
Max Mx	MC|ASCE(2.4.1.1)D	15	57	1	0.45	0.02	0.07	0.00	0.00	0.00
Min Mx	MC|ASCE(2.4.1.8)EY	28	64	5	0.29	-0.01	-0.04	0.00	0.00	0.00
Max My	MC|ASCE(2.4.1.3)S	16	57	3	1.93	0.00	0.00	9.44	-3.15	0.00
Min My	MC|ASCE(2.4.1.7)WY	26	64	3	-0.78	0.00	0.00	-5.02	1.67	0.00
Max Mz	MC|ASCE(2.4.1.7)WX	25	57	3	-0.79	0.00	0.00	-5.02	1.67	0.00
Min Mz	MC|ASCE(2.4.1.3)S	16	64	3	1.93	0.00	0.00	9.44	-3.15	0.00

Compactness: NonCompact

Member Design Results

Label	C. Name	fa	Fa	fby	Fby	fbz	Fbz	F'ey	F'ez	Stress Ratio	Allow Increa	ASD OK
Max Mx	MC|ASCE(2.4.1.1)D	0.25	20.69	0.00	27.60	0.00	27.60	287.65	287.65	0.01	0.00	True
Min Mx	MC|ASCE(2.4.1.8)EY	0.17	20.69	0.00	27.60	0.00	27.60	287.65	287.65	0.01	0.00	True
Max My	MC|ASCE(2.4.1.3)S	1.09	20.69	4.29	27.60	1.43	27.60	287.65	287.65	0.26	0.00	True
Min My	MC|ASCE(2.4.1.7)WY	0.44	27.60	2.28	27.60	0.76	27.60	287.65	287.65	0.13	0.00	True
Max Mz	MC|ASCE(2.4.1.7)WX	0.45	27.60	2.28	27.60	0.76	27.60	287.65	287.65	0.13	0.00	True
Min Mz	MC|ASCE(2.4.1.3)S	1.09	20.69	4.29	27.60	1.43	27.60	287.65	287.65	0.26	0.00	True
Max Fx	MC|ASCE(2.4.1.3)S	1.09	20.69	0.00	27.60	0.00	27.60	287.65	287.65	0.05	0.00	True
Min Fx	MC|ASCE(2.4.1.7)WY	0.52	27.60	0.00	27.60	0.00	27.60	287.65	287.65	0.02	0.00	True
Max Fy	MC|ASCE(2.4.1.3)S	1.09	20.69	0.00	27.60	0.00	27.60	287.65	287.65	0.05	0.00	True
Min Fy	MC|ASCE(2.4.1.3)S	1.09	20.69	0.00	27.60	0.00	27.60	287.65	287.65	0.05	0.00	True
Max Fz	MC|ASCE(2.4.1.3)S	1.09	20.69	0.00	27.60	0.00	27.60	287.65	287.65	0.05	0.00	True
Min Fz	MC|ASCE(2.4.1.3)S	1.09	20.69	0.00	27.60	0.00	27.60	287.65	287.65	0.05	0.00	True

PU1 Lend - Purlin Connection

PURLIN CONNECTION

Weld Depth(in)	4.03	Plate Depth(in)	6.06	Top Flange Width(in)	1.75
Weld Width(in)	4.30	Plate Width(in)	4.69	Screws1	3
Weld Type	Square	Plate Thick(in)	0.10	Screws2	4
Weld Size(in)	0.13	Plate Angle(deg)	87.28	Hole dia(in)	0.25
		Fu(ksi)	58.00	Z edge(in)	0.50
		Fy(ksi)	36.00	Y spread(in)	3.00
				Z spread(in)	0.75
				Strap(true/false)	False
				Strap Screws	0

Design Envelope

Label	C. Name	C. Num	Rbt. Num.	Bar	Location	Fx (K)	Fy (K)	Fz (K)	My (K-in)	Mz (K-in)	Allow. Increase
Max Fx	MC|ASCE(2.4.1.3)S	16	57	1	1	1.93	0.12	0.37	0.00	0.00	0.00
Min Fx	MC|ASCE(2.4.1.7)WY	26	58	1	-0.92	-0.07	-0.20	0.00	0.00	0.00
Max Fy	MC|ASCE(2.4.1.3)S	16	57	1	1	1.93	0.12	0.37	0.00	0.00	0.00
Min Fy	MC|ASCE(2.4.1.7)WY	26	64	1	-0.78	-0.07	-0.20	0.00	0.00	0.00
Max Fz	MC|ASCE(2.4.1.3)S	16	57	1	1	1.93	0.12	0.37	0.00	0.00	0.00
Min Fz	MC|ASCE(2.4.1.7)WY	26	64	1	-0.78	-0.07	-0.20	0.00	0.00	0.00
Max Mx	MC|ASCE(2.4.1.1)D	15	57	1	1	0.45	0.02	0.07	0.00	0.00	0.00
Min Mx	MC|ASCE(2.4.1.8)EY	28	64	1	1	0.25	0.01	0.04	0.00	0.00	0.00
Max My	MC|ASCE(2.4.1.1)D	15	57	1	1	0.45	0.02	0.07	0.00	0.00	0.00
Min My	MC|ASCE(2.4.1.8)EY	28	64	1	1	0.25	0.01	0.04	0.00	0.00	0.00
Max Mz	MC|ASCE(2.4.1.1)D	15	57	1	1	0.45	0.02	0.07	0.00	0.00	0.00
Min Mz	MC|ASCE(2.4.1.8)EY	28	64	1	1	0.25	0.01	0.04	0.00	0.00	0.00

PURLIN CONNECTION RESULTS

Label	C. Name	P(K)	Vh (K)	Vv (K)	Block Shear Nom (K)	Block Shear Ult (K)	Weld Shear Nom (K/in)	Weld Shear Ult (K/in)	Weld Ten Nom (K/in)	Weld Ten Ult (K/in)	Screw Pullout Nom (K)	Screw Pullout Ult (K)	Screw Shear Nom (K)	Screw Shear Ult (K)	Chec
Max Fx	MC|ASCE(2.4.	1.78	0.83	0.14	10.60	0.14	43.72	0.84	0.00	0.00	2.84	0.00	4.67	0.84	True
Min Fx	MC|ASCE(2.4.	-0.85	-0.41	0.09	10.60	0.85	43.72	0.95	0.00	0.00	2.84	0.09	4.67	0.94	True
Max Fy	MC|ASCE(2.4.	1.78	0.83	0.14	10.60	0.14	43.72	0.84	0.00	0.00	2.84	0.00	4.67	0.84	True
Min Fy	MC|ASCE(2.4.	-0.72	-0.35	0.10	10.60	0.72	43.72	0.81	0.00	0.00	2.84	0.10	4.67	0.80	True
Max Fz	MC|ASCE(2.4.	1.78	0.83	0.14	10.60	0.14	43.72	0.84	0.00	0.00	2.84	0.00	4.67	0.84	True
Min Fz	MC|ASCE(2.4.	-0.72	-0.35	0.10	10.60	0.72	43.72	0.81	0.00	0.00	2.84	0.10	4.67	0.80	True
Max Mx	MC|ASCE(2.4.	0.41	0.19	0.01	10.60	0.01	43.72	0.19	0.00	0.00	2.84	0.00	4.67	0.19	True
Min Mx	MC|ASCE(2.4.	0.23	0.10	0.01	10.60	0.01	43.72	0.10	0.00	0.00	2.84	0.00	4.67	0.10	True
Max My	MC|ASCE(2.4.	0.41	0.19	0.01	10.60	0.01	43.72	0.19	0.00	0.00	2.84	0.00	4.67	0.19	True
Min My	MC|ASCE(2.4.	0.23	0.10	0.01	10.60	0.01	43.72	0.10	0.00	0.00	2.84	0.00	4.67	0.10	True
Max Mz	MC|ASCE(2.4.	0.41	0.19	0.01	10.60	0.01	43.72	0.19	0.00	0.00	2.84	0.00	4.67	0.19	True
Min Mz	MC|ASCE(2.4.	0.23	0.10	0.01	10.60	0.01	43.72	0.10	0.00	0.00	2.84	0.00	4.67	0.10	True

PU1 J end - Purlin Connection

PURLIN CONNECTION

Weld Depth(in)	4.03	Plate Depth(in)	6.06	Top Flange Width(in)	1.75
Weld Width(in)	4.30	Plate Width(in)	4.69	Screws1	3
Weld Type	Square	Plate Thick(in)	0.10	Screws2	4
Weld Size(in)	0.13	Plate Angle(deg)	87.28	Hole dia(in)	0.25
		Fu(ksi)	58.00	Z edge(in)	0.50
		Fy(ksi)	36.00	Y spread(in)	3.00
				Z spread(in)	0.75
				Strap(true/false)	False
				Strap Screws	0

Design Envelope

Label	C. Name	C. Num	Rbt. Num.	Bar	Location	Fx (K)	Fy (K)	Fz (K)	My (K-in)	Mz (K-in)	Allow. Increase
Max Fx	MC|ASCE(2.4.1.3)S	16	57	5	1.93	-0.12	-0.37	0.00	0.00	0.00
Min Fx	MC|ASCE(2.4.1.7)WY	26	58	5	-0.92	0.07	0.20	0.00	0.00	0.00
Max Fy	MC|ASCE(2.4.1.7)WX	25	57	5	-0.79	0.07	0.20	0.00	0.00	0.00
Min Fy	MC|ASCE(2.4.1.3)S	16	64	5	1.93	-0.12	-0.37	0.00	0.00	0.00
Max Fz	MC|ASCE(2.4.1.7)WX	25	57	5	-0.79	0.07	0.20	0.00	0.00	0.00
Min Fz	MC|ASCE(2.4.1.3)S	16	64	5	1.93	-0.12	-0.37	0.00	0.00	0.00
Max Mx	MC|ASCE(2.4.1.1)D	15	57	5	0.45	-0.02	-0.07	0.00	0.00	0.00
Min Mx	MC|ASCE(2.4.1.8)EY	28	64	5	0.29	-0.01	-0.04	0.00	0.00	0.00
Max My	MC|ASCE(2.4.1.1)D	15	57	5	0.45	-0.02	-0.07	0.00	0.00	0.00
Min My	MC|ASCE(2.4.1.8)EY	28	64	5	0.29	-0.01	-0.04	0.00	0.00	0.00
Max Mz	MC|ASCE(2.4.1.1)D	15	57	5	0.45	-0.02	-0.07	0.00	0.00	0.00
Min Mz	MC|ASCE(2.4.1.8)EY	28	64	5	0.29	-0.01	-0.04	0.00	0.00	0.00

PURLIN CONNECTION RESULTS

Label	C. Name	P(K)	Vh (K)	Vv (K)	Block Shear Nom (K)	Block Shear Ult (K)	Weld Shear Nom (K/in)	Weld Shear Ult (K/in)	Weld Ten Nom (K/in)	Weld Ten Ult (K/in)	Screw Pullout Nom (K)	Screw Pullout Ult (K)	Screw Shear Nom (K)	Screw Shear Ult (K)	Chec
Max Fx	MC|ASCE(2.4.	1.78	0.83	0.14	10.60	0.14	43.72	0.84	0.00	0.00	2.84	0.00	4.67	0.84	True
Min Fx	MC|ASCE(2.4.	-0.85	-0.41	0.09	10.60	0.85	43.72	0.95	0.00	0.00	2.84	0.09	4.67	0.94	True
Max Fy	MC|ASCE(2.4.	-0.73	-0.36	0.10	10.60	0.73	43.72	0.82	0.00	0.00	2.84	0.10	4.67	0.81	True
Min Fy	MC|ASCE(2.4.	1.78	0.83	0.14	10.60	0.14	43.72	0.84	0.00	0.00	2.84	0.00	4.67	0.84	True
Max Fz	MC|ASCE(2.4.	-0.73	-0.36	0.10	10.60	0.73	43.72	0.82	0.00	0.00	2.84	0.10	4.67	0.81	True
Min Fz	MC|ASCE(2.4.	1.78	0.83	0.14	10.60	0.14	43.72	0.84	0.00	0.00	2.84	0.00	4.67	0.84	True
Max Mx	MC|ASCE(2.4.	0.41	0.19	0.01	10.60	0.01	43.72	0.19	0.00	0.00	2.84	0.00	4.67	0.19	True
Min Mx	MC|ASCE(2.4.	0.27	0.12	0.01	10.60	0.01	43.72	0.12	0.00	0.00	2.84	0.00	4.67	0.12	True
Max My	MC|ASCE(2.4.	0.41	0.19	0.01	10.60	0.01	43.72	0.19	0.00	0.00	2.84	0.00	4.67	0.19	True
Min My	MC|ASCE(2.4.	0.27	0.12	0.01	10.60	0.01	43.72	0.12	0.00	0.00	2.84	0.00	4.67	0.12	True
Max Mz	MC|ASCE(2.4.	0.41	0.19	0.01	10.60	0.01	43.72	0.19	0.00	0.00	2.84	0.00	4.67	0.19	True
Min Mz	MC|ASCE(2.4.	0.27	0.12	0.01	10.60	0.01	43.72	0.12	0.00	0.00	2.84	0.00	4.67	0.12	True

PU2 Purlin

Title:	PU2
Count:	8
Horizontal Angle Start end:	21.45
Horizontal Angle Finish end:	-21.45
Vertical Angle Start end:	-6.95
Vertical Angle Finish end:	6.95
Ky	1.00
Kz	1.00
L(ft)	5.36
Ly(ft)	3.00
Lz(ft)	3.00

Section Properties

Name	HSS4X4X0.125
Depth (in)	4.00
Width (in)	4.00
Nominal Thickness (in)	0.13
Design Thickness (in)	0.12
Area (in^2)	1.77
MOI Strong (in^4)	4.40
MOI weak (in^4)	4.40
Section Mod. Strong (in^3)	2.20
Section Mod. Weak (in^3)	2.20
Fy (ksi)	46

Design Envelope

Label	C. Name	C. Num	Rbt. Num.	Bar	Location	Fx (K)	Fy (K)	Fz (K)	My (K-in)	Mz (K-in)	Allow. Increase
Max Fx	MC|ASCE(2.4.1.3)S	16	25	1	4.29	0.03	0.10	0.00	0.00	0.00
Min Fx	MC|ASCE(2.4.1.7)WY	26	26	5	-2.03	0.02	0.05	0.00	0.00	0.00
Max Fy	MC|ASCE(2.4.1.3)S	16	25	1	4.29	0.03	0.10	0.00	0.00	0.00
Min Fy	MC|ASCE(2.4.1.3)S	16	32	5	4.29	-0.03	-0.10	0.00	0.00	0.00
Max Fz	MC|ASCE(2.4.1.3)S	16	25	1	4.29	0.03	0.10	0.00	0.00	0.00
Min Fz	MC|ASCE(2.4.1.3)S	16	32	5	4.29	-0.03	-0.10	0.00	0.00	0.00
Max Mx	MC|ASCE(2.4.1.1)D	15	25	1	1.16	0.01	0.03	0.00	0.00	0.00
Min Mx	MC|ASCE(2.4.1.8)EY	28	32	5	0.70	-0.01	-0.02	0.00	0.00	0.00
Max My	MC|ASCE(2.4.1.3)S	16	25	3	4.29	0.00	0.00	1.67	-0.56	0.00
Min My	MC|ASCE(2.4.1.7)WY	26	32	3	-1.67	0.00	0.00	-0.72	0.24	0.00
Max Mz	MC|ASCE(2.4.1.7)WX	25	25	3	-1.56	0.00	0.00	-0.72	0.24	0.00
Min Mz	MC|ASCE(2.4.1.3)S	16	32	3	4.29	0.00	0.00	1.67	-0.56	0.00

Compactness: NonCompact

Member Design Results

Label	C. Name	fa	Fa	fby	Fby	fbz	Fbz	F'ey	F'ez	Stress Ratio	Allow Increa	ASD OK
Max Fx	MC|ASCE(2.4.1.3)S	2.42	23.89	0.00	27.60	0.00	27.60	287.65	287.65	0.10	0.00	True
Min Fx	MC|ASCE(2.4.1.7)WY	1.15	27.60	0.00	27.60	0.00	27.60	287.65	287.65	0.04	0.00	True
Max Fy	MC|ASCE(2.4.1.3)S	2.42	23.89	0.00	27.60	0.00	27.60	287.65	287.65	0.10	0.00	True
Min Fy	MC|ASCE(2.4.1.3)S	2.42	23.89	0.00	27.60	0.00	27.60	287.65	287.65	0.10	0.00	True
Max Fz	MC|ASCE(2.4.1.3)S	2.42	23.89	0.00	27.60	0.00	27.60	287.65	287.65	0.10	0.00	True
Min Fz	MC|ASCE(2.4.1.3)S	2.42	23.89	0.00	27.60	0.00	27.60	287.65	287.65	0.10	0.00	True
Max Mx	MC|ASCE(2.4.1.1)D	0.66	23.89	0.00	27.60	0.00	27.60	287.65	287.65	0.03	0.00	True
Min Mx	MC|ASCE(2.4.1.8)EY	0.40	23.89	0.00	27.60	0.00	27.60	287.65	287.65	0.02	0.00	True
Max My	MC|ASCE(2.4.1.3)S	2.42	23.89	0.76	27.60	0.25	27.60	287.65	287.65	0.14	0.00	True
Min My	MC|ASCE(2.4.1.7)WY	0.94	27.60	0.33	27.60	0.11	27.60	287.65	287.65	0.05	0.00	True
Max Mz	MC|ASCE(2.4.1.7)WX	0.88	27.60	0.33	27.60	0.11	27.60	287.65	287.65	0.05	0.00	True
Min Mz	MC|ASCE(2.4.1.3)S	2.42	23.89	0.76	27.60	0.25	27.60	287.65	287.65	0.14	0.00	True

PU2 I end - Purlin Connection

PURLIN CONNECTION

Weld Depth(in)	4.03	Plate Depth(in)	6.06	Top Flange Width(in)	1.75
Weld Width(in)	4.30	Plate Width(in)	4.69	Screws1	3
Weld Type	Square	Plate Thick(in)	0.10	Screws2	4
Weld Size(in)	0.13	Plate Angle(deg)	87.28	Hole dia(in)	0.25
		Fu(ksi)	58.00	Z edge(in)	0.50
		Fy(ksi)	36.00	Y spread(in)	3.00
				Z spread(in)	0.75
				Strap(true/false)	False
				Strap Screws	0

Design Envelope

Label	C. Name	C. Num	Rbt. Bar Num.	Location	Fx (K)	Fy (K)	Fz (K)	My (K-in)	Mz (K-in)	Allow. Increase
Max Fx	MC|ASCE(2.4.1.3)S	16	25	1	4.29	0.03	0.10	0.00	0.00	0.00
Min Fx	MC|ASCE(2.4.1.7)WY	26	26	1	-2.03	-0.02	-0.05	0.00	0.00	0.00
Max Fy	MC|ASCE(2.4.1.3)S	16	25	1	4.29	0.03	0.10	0.00	0.00	0.00
Min Fy	MC|ASCE(2.4.1.7)WY	26	32	1	-1.67	-0.02	-0.05	0.00	0.00	0.00
Max Fz	MC|ASCE(2.4.1.3)S	16	25	1	4.29	0.03	0.10	0.00	0.00	0.00
Min Fz	MC|ASCE(2.4.1.7)WY	26	32	1	-1.67	-0.02	-0.05	0.00	0.00	0.00
Max Mx	MC|ASCE(2.4.1.1)D	15	25	1	1.16	0.01	0.03	0.00	0.00	0.00
Min Mx	MC|ASCE(2.4.1.8)EY	28	32	1	0.69	0.01	0.02	0.00	0.00	0.00
Max My	MC|ASCE(2.4.1.1)D	15	25	1	1.16	0.01	0.03	0.00	0.00	0.00
Min My	MC|ASCE(2.4.1.8)EY	28	32	1	0.69	0.01	0.02	0.00	0.00	0.00
Max Mz	MC|ASCE(2.4.1.1)D	15	25	1	1.16	0.01	0.03	0.00	0.00	0.00
Min Mz	MC|ASCE(2.4.1.8)EY	28	32	1	0.69	0.01	0.02	0.00	0.00	0.00

PURLIN CONNECTION RESULTS

Label	C. Name	P(K)	Vh (K)	Vv (K)	Block Shear Nom (K)	Block Shear Ult (K)	Weld Shear Nom (K/in)	Weld Shear Ult (K/in)	Weld Ten Nom (K/in)	Weld Ten Ult (K/in)	Screw Pullout Nom (K)	Screw Pullout Ult (K)	Screw Shear Nom (K)	Screw Shear Ult (K)	Che
Min Fx	MC|ASCE(2.4.	-1.88	-0.75	0.20	10.60	2.08	43.72	2.03	0.00	0.00	2.84	0.00	4.67	2.21	True
Max Fy	MC|ASCE(2.4.	3.96	1.59	0.42	10.60	0.00	43.72	1.65	0.00	0.00	2.84	0.42	4.67	1.59	True
Min Fy	MC|ASCE(2.4.	-1.54	-0.62	0.16	10.60	1.70	43.72	1.67	0.00	0.00	2.84	0.00	4.67	1.81	True
Max Fz	MC|ASCE(2.4.	3.96	1.59	0.42	10.60	0.00	43.72	1.65	0.00	0.00	2.84	0.42	4.67	1.59	True
Min Fz	MC|ASCE(2.4.	-1.54	-0.62	0.16	10.60	1.70	43.72	1.67	0.00	0.00	2.84	0.00	4.67	1.81	True
Max Mx	MC|ASCE(2.4.	1.07	0.43	0.11	10.60	0.00	43.72	0.45	0.00	0.00	2.84	0.11	4.67	0.43	True
Min Mx	MC|ASCE(2.4.	0.64	0.26	0.07	10.60	0.00	43.72	0.27	0.00	0.00	2.84	0.07	4.67	0.26	True
Max My	MC|ASCE(2.4.	1.07	0.43	0.11	10.60	0.00	43.72	0.45	0.00	0.00	2.84	0.11	4.67	0.43	True
Min My	MC|ASCE(2.4.	0.64	0.26	0.07	10.60	0.00	43.72	0.27	0.00	0.00	2.84	0.07	4.67	0.26	True
Max Mz	MC|ASCE(2.4.	1.07	0.43	0.11	10.60	0.00	43.72	0.45	0.00	0.00	2.84	0.11	4.67	0.43	True
Min Mz	MC|ASCE(2.4.	0.64	0.26	0.07	10.60	0.00	43.72	0.27	0.00	0.00	2.84	0.07	4.67	0.26	True
Max Fx	MC|ASCE(2.4.	3.96	1.59	0.42	10.60	0.00	43.72	1.65	0.00	0.00	2.84	0.42	4.67	1.59	True

PU2 J end - Purlin Connection

PURLIN CONNECTION

Weld Depth(in)	4.03	**Plate Depth(in)**	6.06	**Top Flange Width(in)**	1.75
Weld Width(in)	4.30	**Plate Width(in)**	4.69	**Screws1**	3
Weld Type	Square	**Plate Thick(in)**	0.10	**Screws2**	4
Weld Size(in)	0.13	**Plate Angle(deg)**	87.28	**Hole dia(in)**	0.25
		Fu(ksi)	58.00	**Z edge(in)**	0.50
		Fy(ksi)	36.00	**Y spread(in)**	3.00
				Z spread(in)	0.75
				Strap(true/false)	False
				Strap Screws	0

Design Envelope

Label	C. Name	C. Num	Rbt. Num.	Bar	Location	Fx (K)	Fy (K)	Fz (K)	My (K-in)	Mz (K-in)	Allow. Increase
Max Fx	MC|ASCE(2.4.1.3)S	16	25	5	4.29	-0.03	-0.10	0.00	0.00	0.00
Min Fx	MC|ASCE(2.4.1.7)WY	26	26	5	-2.03	0.02	0.05	0.00	0.00	0.00
Max Fy	MC|ASCE(2.4.1.7)WX	25	25	5	-1.56	0.02	0.05	0.00	0.00	0.00
Min Fy	MC|ASCE(2.4.1.3)S	16	32	5	4.29	-0.03	-0.10	0.00	0.00	0.00
Max Fz	MC|ASCE(2.4.1.7)WX	25	25	5	-1.56	0.02	0.05	0.00	0.00	0.00
Min Fz	MC|ASCE(2.4.1.3)S	16	32	5	4.29	-0.03	-0.10	0.00	0.00	0.00
Max Mx	MC|ASCE(2.4.1.1)D	15	25	5	1.16	-0.01	-0.03	0.00	0.00	0.00
Min Mx	MC|ASCE(2.4.1.8)EY	28	32	5	0.70	-0.01	-0.02	0.00	0.00	0.00
Max My	MC|ASCE(2.4.1.1)D	15	25	5	1.16	-0.01	-0.03	0.00	0.00	0.00
Min My	MC|ASCE(2.4.1.8)EY	28	32	5	0.70	-0.01	-0.02	0.00	0.00	0.00
Max Mz	MC|ASCE(2.4.1.1)D	15	25	5	1.16	-0.01	-0.03	0.00	0.00	0.00
Min Mz	MC|ASCE(2.4.1.8)EY	28	32	5	0.70	-0.01	-0.02	0.00	0.00	0.00

PURLIN CONNECTION RESULTS

Label	C. Name	P(K)	Vh (K)	Vv (K)	Block Shear Nom (K)	Block Shear Ult (K)	Weld Shear Nom (K/in)	Weld Shear Ult (K/in)	Weld Ten Nom (K/in)	Weld Ten Ult (K/in)	Screw Pullout Nom (K)	Screw Pullout Ult (K)	Screw Shear Nom (K)	Screw Shear Ult (K)	Chec
Max Fx	MC|ASCE(2.4.	3.96	1.59	0.42	10.60	0.00	43.72	1.65	0.00	0.00	2.84	0.42	4.67	1.59	True
Min Fx	MC|ASCE(2.4.	-1.88	-0.75	0.20	10.60	2.08	43.72	2.03	0.00	0.00	2.84	0.00	4.67	2.21	True
Max Fy	MC|ASCE(2.4.	-1.44	-0.58	0.14	10.60	1.59	43.72	1.56	0.00	0.00	2.84	0.00	4.67	1.69	True
Min Fy	MC|ASCE(2.4.	3.96	1.59	0.42	10.60	0.00	43.72	1.65	0.00	0.00	2.84	0.42	4.67	1.59	True
Max Fz	MC|ASCE(2.4.	-1.44	-0.58	0.14	10.60	1.59	43.72	1.56	0.00	0.00	2.84	0.00	4.67	1.69	True
Min Fz	MC|ASCE(2.4.	3.96	1.59	0.42	10.60	0.00	43.72	1.65	0.00	0.00	2.84	0.42	4.67	1.59	True
Max Mx	MC|ASCE(2.4.	1.07	0.43	0.11	10.60	0.00	43.72	0.45	0.00	0.00	2.84	0.11	4.67	0.43	True
Min Mx	MC|ASCE(2.4.	0.65	0.26	0.07	10.60	0.00	43.72	0.27	0.00	0.00	2.84	0.07	4.67	0.26	True
Max My	MC|ASCE(2.4.	1.07	0.43	0.11	10.60	0.00	43.72	0.45	0.00	0.00	2.84	0.11	4.67	0.43	True
Min My	MC|ASCE(2.4.	0.65	0.26	0.07	10.60	0.00	43.72	0.27	0.00	0.00	2.84	0.07	4.67	0.26	True
Max Mz	MC|ASCE(2.4.	1.07	0.43	0.11	10.60	0.00	43.72	0.45	0.00	0.00	2.84	0.11	4.67	0.43	True
Min Mz	MC|ASCE(2.4.	0.65	0.26	0.07	10.60	0.00	43.72	0.27	0.00	0.00	2.84	0.07	4.67	0.26	True

PU3 Purlin

Title:	PU3
Count:	8
Horizontal Angle Start end:	21.45
Horizontal Angle Finish end:	-21.45
Vertical Angle Start end:	-6.95
Vertical Angle Finish end:	6.95
Ky	1.00
Kz	1.00
L(ft)	2.68
Ly(ft)	3.00
Lz(ft)	3.00

Section Properties

Name	HSS4X4X0.125
Depth (in)	4.00
Width (in)	4.00
Nominal Thickness (in)	0.13
Design Thickness (in)	0.12
Area (in^2)	1.77
MOI Strong (in^4)	4.40
MOI weak (in^4)	4.40
Section Mod. Strong (in^3)	2.20
Section Mod. Weak (in^3)	2.20
Fy (ksi)	46

Design Envelope

Label	C. Name	C. Num	Rbt. Num.	Bar	Location	Fx (K)	Fy (K)	Fz (K)	My (K-in)	Mz (K-in)	Allow. Increase
Max Fx	MC|ASCE(2.4.1.3)S	16	65	1	0.21	0.04	0.11	0.00	0.00	0.00
Min Fx	MC|ASCE(2.4.1.7)WX	25	68	5	-0.12	0.02	0.06	0.00	0.00	0.00
Max Fy	MC|ASCE(2.4.1.3)S	16	65	1	0.21	0.04	0.11	0.00	0.00	0.00
Min Fy	MC|ASCE(2.4.1.3)S	16	72	5	0.21	-0.04	-0.11	0.00	0.00	0.00
Max Fz	MC|ASCE(2.4.1.3)S	16	65	1	0.21	0.04	0.11	0.00	0.00	0.00
Min Fz	MC|ASCE(2.4.1.3)S	16	72	5	0.21	-0.04	-0.11	0.00	0.00	0.00
Max Mx	MC|ASCE(2.4.1.1)D	15	65	1	0.05	0.01	0.02	0.00	0.00	0.00
Min Mx	MC|ASCE(2.4.1.8)EY	28	72	5	0.03	0.00	-0.01	0.00	0.00	0.00
Max My	MC|ASCE(2.4.1.3)S	16	65	3	0.21	0.00	0.00	0.89	-0.30	0.00
Min My	MC|ASCE(2.4.1.7)WY	26	72	3	-0.04	0.00	0.00	-0.47	0.16	0.00
Max Mz	MC|ASCE(2.4.1.7)WX	25	65	3	-0.07	0.00	0.00	-0.47	0.16	0.00
Min Mz	MC|ASCE(2.4.1.3)S	16	72	3	0.21	0.00	0.00	0.89	-0.30	0.00

Compactness: NonCompact

Member Design Results

Label	C. Name	fa	Fa	fby	Fby	fbz	Fbz	F'ey	F'ez	Stress Ratio	Allow Increa	ASD OK
Max Fx	MC|ASCE(2.4.1.3)S	0.12	25.85	0.00	27.60	0.00	27.60	287.65	287.65	0.00	0.00	True
Min Fx	MC|ASCE(2.4.1.7)WX	0.07	27.60	0.00	27.60	0.00	27.60	287.65	287.65	0.00	0.00	True
Max Fy	MC|ASCE(2.4.1.3)S	0.12	25.85	0.00	27.60	0.00	27.60	287.65	287.65	0.00	0.00	True
Min Fy	MC|ASCE(2.4.1.3)S	0.12	25.85	0.00	27.60	0.00	27.60	287.65	287.65	0.00	0.00	True
Max Fz	MC|ASCE(2.4.1.3)S	0.12	25.85	0.00	27.60	0.00	27.60	287.65	287.65	0.00	0.00	True
Min Fz	MC|ASCE(2.4.1.3)S	0.12	25.85	0.00	27.60	0.00	27.60	287.65	287.65	0.00	0.00	True
Max Mx	MC|ASCE(2.4.1.1)D	0.03	25.85	0.00	27.60	0.00	27.60	287.65	287.65	0.00	0.00	True
Min Mx	MC|ASCE(2.4.1.8)EY	0.02	25.85	0.00	27.60	0.00	27.60	287.65	287.65	0.00	0.00	True
Max My	MC|ASCE(2.4.1.3)S	0.12	25.85	0.40	27.60	0.13	27.60	287.65	287.65	0.02	0.00	True
Min My	MC|ASCE(2.4.1.7)WY	0.02	27.60	0.21	27.60	0.07	27.60	287.65	287.65	0.01	0.00	True
Max Mz	MC|ASCE(2.4.1.7)WX	0.04	27.60	0.21	27.60	0.07	27.60	287.65	287.65	0.01	0.00	True
Min Mz	MC|ASCE(2.4.1.3)S	0.12	25.85	0.40	27.60	0.13	27.60	287.65	287.65	0.02	0.00	True

PU3 I end - Purlin Connection

PURLIN CONNECTION

Weld Depth(in)	4.03	Plate Depth(in)	6.06	Top Flange Width(in)	1.75
Weld Width(in)	4.30	Plate Width(in)	4.69	Screws1	3
Weld Type	Square	Plate Thick(in)	0.10	Screws2	4
Weld Size(in)	0.13	Plate Angle(deg)	87.28	Hole dia(in)	0.25
		Fu(ksi)	58.00	Z edge(in)	0.50
		Fy(ksi)	36.00	Y spread(in)	3.00
				Z spread(in)	0.75
				Strap(true/false)	False
				Strap Screws	0

Design Envelope

Label	C. Name	C. Num	Rbt. Num.	Bar	Location	Fx (K)	Fy (K)	Fz (K)	My (K-in)	Mz (K-in)	Allow. Increase
Max Fx	MC|ASCE(2.4.1.3)S	16	65	1	0.21	0.04	0.11	0.00	0.00	0.00
Min Fx	MC|ASCE(2.4.1.7)WX	25	68	1	-0.12	-0.02	-0.06	0.00	0.00	0.00
Max Fy	MC|ASCE(2.4.1.3)S	16	65	1	0.21	0.04	0.11	0.00	0.00	0.00
Min Fy	MC|ASCE(2.4.1.7)WY	26	72	1	-0.04	-0.02	-0.06	0.00	0.00	0.00
Max Fz	MC|ASCE(2.4.1.3)S	16	65	1	0.21	0.04	0.11	0.00	0.00	0.00
Min Fz	MC|ASCE(2.4.1.7)WY	26	72	1	-0.04	-0.02	-0.06	0.00	0.00	0.00
Max Mx	MC|ASCE(2.4.1.1)D	15	65	1	0.05	0.01	0.02	0.00	0.00	0.00
Min Mx	MC|ASCE(2.4.1.8)EY	28	72	1	0.02	0.00	0.01	0.00	0.00	0.00
Max My	MC|ASCE(2.4.1.1)D	15	65	1	0.05	0.01	0.02	0.00	0.00	0.00
Min My	MC|ASCE(2.4.1.8)EY	28	72	1	0.02	0.00	0.01	0.00	0.00	0.00
Max Mz	MC|ASCE(2.4.1.1)D	15	65	1	0.05	0.01	0.02	0.00	0.00	0.00
Min Mz	MC|ASCE(2.4.1.8)EY	28	72	1	0.02	0.00	0.01	0.00	0.00	0.00

PURLIN CONNECTION RESULTS

Label	C. Name	P(K)	Vh (K)	Vv (K)	Block Shear Nom (K)	Block Shear Ult (K)	Weld Shear Nom (K/in)	Weld Shear Ult (K/in)	Weld Ten Nom (K/in)	Weld Ten Ult (K/in)	Screw Pullout Nom (K)	Screw Pullout Ult (K)	Screw Shear Nom (K)	Screw Shear Ult (K)	Chec
Max Fx	MC|ASCE(2.4.	0.19	0.11	0.08	10.60	0.08	43.72	0.14	0.00	0.00	2.84	0.00	4.67	0.14	True
Min Fx	MC|ASCE(2.4.	-0.11	-0.06	-0.04	10.60	0.11	43.72	0.13	0.00	0.00	2.84	0.04	4.67	0.12	True
Max Fy	MC|ASCE(2.4.	0.19	0.11	0.08	10.60	0.08	43.72	0.14	0.00	0.00	2.84	0.00	4.67	0.14	True
Min Fy	MC|ASCE(2.4.	-0.03	-0.03	-0.05	10.60	0.03	43.72	0.07	0.00	0.00	2.84	0.05	4.67	0.05	True
Max Fz	MC|ASCE(2.4.	0.19	0.11	0.08	10.60	0.08	43.72	0.14	0.00	0.00	2.84	0.00	4.67	0.14	True
Min Fz	MC|ASCE(2.4.	-0.03	-0.03	-0.05	10.60	0.03	43.72	0.07	0.00	0.00	2.84	0.05	4.67	0.05	True
Max Mx	MC|ASCE(2.4.	0.04	0.02	0.02	10.60	0.02	43.72	0.03	0.00	0.00	2.84	0.00	4.67	0.03	True
Min Mx	MC|ASCE(2.4.	0.02	0.01	0.01	10.60	0.01	43.72	0.02	0.00	0.00	2.84	0.00	4.67	0.02	True
Max My	MC|ASCE(2.4.	0.04	0.02	0.02	10.60	0.02	43.72	0.03	0.00	0.00	2.84	0.00	4.67	0.03	True
Min My	MC|ASCE(2.4.	0.02	0.01	0.01	10.60	0.01	43.72	0.02	0.00	0.00	2.84	0.00	4.67	0.02	True
Max Mz	MC|ASCE(2.4.	0.04	0.02	0.02	10.60	0.02	43.72	0.03	0.00	0.00	2.84	0.00	4.67	0.03	True
Min Mz	MC|ASCE(2.4.	0.02	0.01	0.01	10.60	0.01	43.72	0.02	0.00	0.00	2.84	0.00	4.67	0.02	True

PU3 J end - Purlin Connection

PURLIN CONNECTION

Weld Depth(in)	4.03	Plate Depth(in)	6.06	Top Flange Width(in)	1.75
Weld Width(in)	4.30	Plate Width(in)	4.69	Screws1	3
Weld Type	Square	Plate Thick(in)	0.10	Screws2	4
Weld Size(in)	0.13	Plate Angle(deg)	87.28	Hole dia(in)	0.25
		Fu(ksi)	58.00	Z edge(in)	0.50
		Fy(ksi)	36.00	Y spread(in)	3.00
				Z spread(in)	0.75
				Strap(true/false)	False
				Strap Screws	0

Design Envelope

Label	C. Name	C. Num	Rbt. Bar Num.	Location	Fx (K)	Fy (K)	Fz (K)	My (K-in)	Mz (K-in)	Allow. Increase
Max Fx	MC|ASCE(2.4.1.3)S	16	65	5	0.21	-0.04	-0.11	0.00	0.00	0.00
Min Fx	MC|ASCE(2.4.1.7)WX	25	68	5	-0.12	0.02	0.06	0.00	0.00	0.00
Max Fy	MC|ASCE(2.4.1.7)WX	25	65	5	-0.07	0.02	0.06	0.00	0.00	0.00
Min Fy	MC|ASCE(2.4.1.3)S	16	72	5	0.21	-0.04	-0.11	0.00	0.00	0.00
Max Fz	MC|ASCE(2.4.1.7)WX	25	65	5	-0.07	0.02	0.06	0.00	0.00	0.00
Min Fz	MC|ASCE(2.4.1.3)S	16	72	5	0.21	-0.04	-0.11	0.00	0.00	0.00
Max Mx	MC|ASCE(2.4.1.1)D	15	65	5	0.05	-0.01	-0.02	0.00	0.00	0.00
Min Mx	MC|ASCE(2.4.1.8)EY	28	72	5	0.03	0.00	-0.01	0.00	0.00	0.00
Max My	MC|ASCE(2.4.1.1)D	15	65	5	0.05	-0.01	-0.02	0.00	0.00	0.00
Min My	MC|ASCE(2.4.1.8)EY	28	72	5	0.03	0.00	-0.01	0.00	0.00	0.00
Max Mz	MC|ASCE(2.4.1.1)D	15	65	5	0.05	-0.01	-0.02	0.00	0.00	0.00
Min Mz	MC|ASCE(2.4.1.8)EY	28	72	5	0.03	0.00	-0.01	0.00	0.00	0.00

PURLIN CONNECTION RESULTS

Label	C. Name	P(K)	Vh (K)	Vv (K)	Block Shear Nom (K)	Block Shear Ult (K)	Weld Shear Nom (K/in)	Weld Shear Ult (K/in)	Weld Ten Nom (K/in)	Weld Ten Ult (K/in)	Screw Pullout Nom (K)	Screw Pullout Ult (K)	Screw Shear Nom (K)	Screw Shear Ult (K)	Che
Max Fx	MC|ASCE(2.4.	0.19	0.11	0.08	10.60	0.08	43.72	0.14	0.00	0.00	2.84	0.00	4.67	0.14	True
Min Fx	MC|ASCE(2.4.	-0.11	-0.06	0.04	10.60	0.11	43.72	0.13	0.00	0.00	2.84	0.04	4.67	0.12	True
Max Fy	MC|ASCE(2.4.	-0.07	-0.05	0.05	10.60	0.07	43.72	0.09	0.00	0.00	2.84	0.05	4.67	0.08	True
Min Fy	MC|ASCE(2.4.	0.19	0.11	0.08	10.60	0.08	43.72	0.14	0.00	0.00	2.84	0.00	4.67	0.14	True
Max Fz	MC|ASCE(2.4.	-0.07	-0.05	0.05	10.60	0.07	43.72	0.09	0.00	0.00	2.84	0.05	4.67	0.08	True
Min Fz	MC|ASCE(2.4.	0.19	0.11	0.08	10.60	0.08	43.72	0.14	0.00	0.00	2.84	0.00	4.67	0.14	True
Max Mx	MC|ASCE(2.4.	0.04	0.02	0.02	10.60	0.02	43.72	0.03	0.00	0.00	2.84	0.00	4.67	0.03	True
Min Mx	MC|ASCE(2.4.	0.03	0.02	0.01	10.60	0.01	43.72	0.02	0.00	0.00	2.84	0.00	4.67	0.02	True
Max My	MC|ASCE(2.4.	0.04	0.02	0.02	10.60	0.02	43.72	0.03	0.00	0.00	2.84	0.00	4.67	0.03	True
Min My	MC|ASCE(2.4.	0.03	0.02	0.01	10.60	0.01	43.72	0.02	0.00	0.00	2.84	0.00	4.67	0.02	True
Max Mz	MC|ASCE(2.4.	0.04	0.02	0.02	10.60	0.02	43.72	0.03	0.00	0.00	2.84	0.00	4.67	0.03	True
Min Mz	MC|ASCE(2.4.	0.03	0.02	0.01	10.60	0.01	43.72	0.02	0.00	0.00	2.84	0.00	4.67	0.02	True

RF2 Rafter

Title:	RF2
Count:	8
Horizontal Angle Start end:	0.00
Horizontal Angle Finish end:	0.00
Vertical Angle Start end:	17.12
Vertical Angle Finish end:	17.12
Ky	2.10
Kz	2.10
L(ft)	7.33
Ly(ft)	3.66
Lz(ft)	3.66

Section Properties

Name	HSS5X5X0.125
Depth (in)	5.00
Width (in)	5.00
Nominal Thickness (in)	0.13
Design Thickness (in)	0.12
Area (in^2)	2.23
MOI Strong (in^4)	8.80
MOI weak (in^4)	8.80
Section Mod. Strong (in^3)	3.52
Section Mod. Weak (in^3)	3.52
Fy (ksi)	46

Design Envelope

Label	C. Name	C. Num	Rbt. Num.	Bar	Location	Fx (K)	Fy (K)	Fz (K)	My (K-in)	Mz (K-in)	Allow. Increase
Max Fx	MC|ASCE(2.4.1.3)S	16	49	1	0.47	0.00	0.16	-4.80	0.00	0.00
Min Fx	MC|ASCE(2.4.1.7)WY	26	52	2	-0.48	-0.01	-0.09	2.90	-0.32	0.00
Max Fy	MC|ASCE(2.4.1.5)WY	18	56	3	-0.14	0.02	0.04	-0.34	0.61	0.00
Min Fy	MC|ASCE(2.4.1.7)WY	26	53	5	-0.19	-0.02	0.02	0.86	0.14	0.00
Max Fz	MC|ASCE(2.4.1.3)S	16	49	1	0.47	0.00	0.16	-4.80	0.00	0.00
Min Fz	MC|ASCE(2.4.1.7)WY	26	52	2	-0.48	-0.01	-0.09	2.90	-0.32	0.00
Max Mx	MC|ASCE(2.4.1.5)WY	18	53	3	-0.14	-0.02	0.04	-0.34	-0.61	0.00
Min Mx	MC|ASCE(2.4.1.7)WY	26	56	5	-0.19	0.02	0.02	0.86	-0.14	0.00
Max My	MC|ASCE(2.4.1.7)WY	26	49	1	-0.48	0.01	-0.09	4.89	0.51	0.00
Min My	MC|ASCE(2.4.1.3)S	16	56	1	0.47	0.00	0.16	-4.80	0.00	0.00
Max Mz	MC|ASCE(2.4.1.5)WY	18	56	3	-0.14	0.02	0.04	-0.34	0.61	0.00
Min Mz	MC|ASCE(2.4.1.7)WY	26	53	3	-0.19	-0.02	0.04	-0.49	-0.61	0.00

Compactness: Slender

Slender Section Properties

Label	C. Num	Axis	P (K)	Mprime (K-in)	M orth (K-in)	Atrans (in^2)	Itrans (in^4)	StransB (in^3)	StransT (in^4)	Qa	Fa (ksi)
Max Fx	16	y	0.47	4.80	0.00	2.18	7.93	3.25	3.10	0.98	15.60
Min Fx	26	z	-0.48	0.32	2.90	2.18	7.93	3.25	3.10	0.98	22.68
Min Fx	26	y	-0.48	2.90	0.32	2.18	7.93	3.25	3.10	0.98	15.60
Max Fy	18	z	-0.14	0.61	0.34	2.18	7.93	3.25	3.10	0.98	22.68
Max Fy	18	y	-0.14	0.34	0.61	2.18	7.93	3.25	3.10	0.98	15.60
Min Fy	26	z	-0.19	0.14	0.86	2.18	7.93	3.25	3.10	0.98	22.68
Min Fy	26	y	-0.19	0.86	0.14	2.18	7.93	3.25	3.10	0.98	15.60
Max Fz	16	y	0.47	4.80	0.00	2.18	7.93	3.25	3.10	0.98	15.60
Min Fz	26	z	-0.48	0.32	2.90	2.18	7.93	3.25	3.10	0.98	22.68
Min Fz	26	y	-0.48	2.90	0.32	2.18	7.93	3.25	3.10	0.98	15.60
Max Mx	18	z	-0.14	0.61	0.34	2.18	7.93	3.25	3.10	0.98	22.68
Max Mx	18	y	-0.14	0.34	0.61	2.18	7.93	3.25	3.10	0.98	15.60
Min Mx	26	z	-0.19	0.14	0.86	2.18	7.93	3.25	3.10	0.98	22.68
Min Mx	26	y	-0.19	0.86	0.14	2.18	7.93	3.25	3.10	0.98	15.60
Max My	26	z	-0.48	0.51	4.89	2.18	7.93	3.25	3.10	0.98	22.68
Max My	26	y	-0.48	4.89	0.51	2.18	7.93	3.25	3.10	0.98	15.60
Min My	16	y	0.47	4.80	0.00	2.18	7.93	3.25	3.10	0.98	15.60
Max Mz	18	z	-0.14	0.61	0.34	2.18	7.93	3.25	3.10	0.98	22.68
Max Mz	18	y	-0.14	0.34	0.61	2.18	7.93	3.25	3.10	0.98	15.60
Min Mz	26	z	-0.19	0.61	0.49	2.18	7.93	3.25	3.10	0.98	22.68
Min Mz	26	y	-0.19	0.49	0.61	2.18	7.93	3.25	3.10	0.98	15.60

Member Design Results

Label	C. Name	fa	Fa	fby	Fby	fbz	Fbz	F'ey	F'ez	Stress Ratio	Allow Increa	ASD OK
Max Fx	MC|ASCE(2.4.1.3)S	0.21	15.60	1.55	27.60	0.00	27.60	69.35	69.35	0.07	0.00	True
Min Fx	MC|ASCE(2.4.1.7)WY	0.22	15.60	0.94	27.60	0.10	27.60	69.35	69.35	0.05	0.00	True
Max Fy	MC|ASCE(2.4.1.5)WY	0.06	15.60	0.11	27.60	0.20	27.60	69.35	69.35	0.02	0.00	True
Min Fy	MC|ASCE(2.4.1.7)WY	0.09	15.60	0.28	27.60	0.05	27.60	69.35	69.35	0.02	0.00	True
Max Fz	MC|ASCE(2.4.1.3)S	0.21	15.60	1.55	27.60	0.00	27.60	69.35	69.35	0.07	0.00	True
Min Fz	MC|ASCE(2.4.1.7)WY	0.22	15.60	0.94	27.60	0.10	27.60	69.35	69.35	0.05	0.00	True
Max Mx	MC|ASCE(2.4.1.5)WY	0.06	15.60	0.11	27.60	0.20	27.60	69.35	69.35	0.02	0.00	True
Min Mx	MC|ASCE(2.4.1.7)WY	0.09	15.60	0.28	27.60	0.05	27.60	69.35	69.35	0.02	0.00	True
Max My	MC|ASCE(2.4.1.7)WY	0.21	15.60	1.58	27.60	0.17	27.60	69.35	69.35	0.08	0.00	True
Min My	MC|ASCE(2.4.1.3)S	0.21	15.60	1.55	27.60	0.00	27.60	69.35	69.35	0.07	0.00	True
Max Mz	MC|ASCE(2.4.1.5)WY	0.06	15.60	0.11	27.60	0.20	27.60	69.35	69.35	0.02	0.00	True
Min Mz	MC|ASCE(2.4.1.7)WY	0.08	15.60	0.16	27.60	0.20	27.60	69.35	69.35	0.02	0.00	True

RF2 I end - End Plate Connection

END PLATE								
	Depth of Cut (in)	5.23	Length (in)	5.63	Bolt Count	2	Weld Size	0.13
	Width of cut (in)	5.00	Width (in)	5.00	Bolt Size (in)	0.63	Weld	Square
			Thick (in)	0.63	Vert. Spread(in)	0.00		
			Angle (deg)	90.00	Hor. Spread(in)	2.63		
			Fu	58.00	Flange	0.00		
			Fy	36.00				

Design Envelope

Label	C. Name	C. Num	Rbt. Bar Num.	Location	Fx (K)	Fy (K)	Fz (K)	My (K-in)	Mz (K-in)	Allow. Increase
Max Fx	MC|ASCE(2.4.1.3)S	16	49	1	0.47	0.00	0.16	-4.80	0.00	0.00
Min Fx	MC|ASCE(2.4.1.7)WY	26	52	1	-0.48	-0.01	-0.09	4.89	-0.51	0.00
Max Fy	MC|ASCE(2.4.1.5)WY	18	53	1	-0.19	0.02	-0.03	1.48	0.13	0.00
Min Fy	MC|ASCE(2.4.1.7)WY	26	56	1	-0.26	-0.02	-0.05	2.08	-0.13	0.00
Max Fz	MC|ASCE(2.4.1.3)S	16	49	1	0.47	0.00	0.16	-4.80	0.00	0.00
Min Fz	MC|ASCE(2.4.1.7)WY	26	52	1	-0.48	-0.01	-0.09	4.89	-0.51	0.00
Max Mx	MC|ASCE(2.4.1.5)WY	18	53	1	-0.19	0.02	-0.03	1.48	0.13	0.00
Min Mx	MC|ASCE(2.4.1.7)WY	26	56	1	-0.26	-0.02	-0.05	2.08	-0.13	0.00
Max My	MC|ASCE(2.4.1.7)WY	26	49	1	-0.48	0.01	-0.09	4.89	0.51	0.00
Min My	MC|ASCE(2.4.1.3)S	16	56	1	0.47	0.00	0.16	-4.80	0.00	0.00
Max Mz	MC|ASCE(2.4.1.5)WX	17	51	1	-0.41	0.01	-0.06	4.29	0.51	0.00
Min Mz	MC|ASCE(2.4.1.7)WX	25	54	1	-0.48	-0.01	-0.09	4.89	-0.51	0.00

End Plate Connection Results

Label	C. Num	Fh	Fv	My	Tu(K) Bolt Weld	Vu(K) Bolt Weld	Tn(K) Bolt Weld	Vn(K) Bolt Weld	Req. Size(in) Bolt Weld	Mu(K-in) Plate	Rqd. T(in) Plate Flange	Act. T(in) Plate Flange	Che
Max Fx	16	0.40	0.29	-4.80	3.51	0.47	43.99	21.00	0.18	0.04	0.10	0.63	True
					0.94	0.11	21.00	21.00	0.01		0.00	0.00	
Min Fx	26	-0.43	0.22	4.89	4.63	0.36	43.99	21.00	0.20	0.06	0.11	0.63	True
					1.40	0.09	21.00	21.00	0.01		0.00	0.00	
Max Fy	18	-0.18	0.09	1.48	1.42	0.14	44.00	21.00	0.11	0.02	0.06	0.63	True
					0.43	0.03	21.00	21.00	0.00		0.00	0.00	
Min Fy	26	-0.23	0.12	2.08	1.95	0.20	44.00	21.00	0.13	0.02	0.07	0.63	True
					0.59	0.05	21.00	21.00	0.00		0.00	0.00	
Max Fz	16	0.40	0.29	-4.80	3.51	0.47	43.99	21.00	0.18	0.04	0.10	0.63	True
					0.94	0.11	21.00	21.00	0.01		0.00	0.00	
Min Fz	26	-0.43	0.22	4.89	4.63	0.36	43.99	21.00	0.20	0.06	0.11	0.63	True
					1.40	0.09	21.00	21.00	0.01		0.00	0.00	
Max Mx	18	-0.18	0.09	1.48	1.42	0.14	44.00	21.00	0.11	0.02	0.06	0.63	True
					0.43	0.03	21.00	21.00	0.00		0.00	0.00	
Min Mx	26	-0.23	0.12	2.08	1.95	0.20	44.00	21.00	0.13	0.02	0.07	0.63	True
					0.59	0.05	21.00	21.00	0.00		0.00	0.00	
Max My	26	-0.43	0.22	4.89	4.63	0.36	43.99	21.00	0.20	0.06	0.11	0.63	True
					1.40	0.09	21.00	21.00	0.01		0.00	0.00	
Min My	16	0.40	0.29	-4.80	3.51	0.47	43.99	21.00	0.18	0.04	0.10	0.63	True
					0.94	0.11	21.00	21.00	0.01		0.00	0.00	
Max Mz	17	-0.38	0.18	4.29	4.10	0.30	44.00	21.00	0.19	0.05	0.11	0.63	True
					1.24	0.07	21.00	21.00	0.01		0.00	0.00	
Min Mz	25	-0.43	0.22	4.89	4.63	0.36	43.99	21.00	0.20	0.06	0.11	0.63	True
					1.40	0.09	21.00	21.00	0.01		0.00	0.00	

RF2 J end - End Plate Connection

END PLATE								
	Depth of Cut (in)	5.23	Length (in)	5.63	Bolt Count	2	Weld Size	0.13
	Width of cut (in)	5.00	Width (in)	5.00	Bolt Size (in)	0.63	Weld	Square
			Thick (in)	0.63	Vert. Spread(in)	0.00		
			Angle (deg)	90.00	Hor. Spread(in)	2.63		
			Fu	58.00	Flange	0.00		
			Fy	36.00				

Design Envelope

Label	C. Name	C. Num	Rbt. Bar Num.	Location	Fx (K)	Fy (K)	Fz (K)	My (K-in)	Mz (K-in)	Allow. Increase
Max Fx	MC|ASCE(2.4.1.6)WX	21	52	5	0.32	0.00	-0.04	-0.82	-0.03	0.00
Min Fx	MC|ASCE(2.4.1.7)WY	26	52	5	-0.40	-0.01	-0.02	0.37	0.14	0.00
Max Fy	MC|ASCE(2.4.1.5)WY	18	56	5	-0.15	0.02	0.01	0.73	-0.14	0.00
Min Fy	MC|ASCE(2.4.1.7)WY	26	53	5	-0.19	-0.02	0.02	0.86	0.14	0.00
Max Fz	MC|ASCE(2.4.1.7)WY	26	54	5	0.18	-0.01	0.05	0.22	0.04	0.00
Min Fz	MC|ASCE(2.4.1.3)S	16	56	5	0.23	0.00	-0.07	-0.96	0.00	0.00
Max Mx	MC|ASCE(2.4.1.5)WY	18	53	5	-0.15	-0.02	0.01	0.73	0.14	0.00
Min Mx	MC|ASCE(2.4.1.7)WY	26	56	5	-0.19	0.02	0.02	0.86	-0.14	0.00
Max My	MC|ASCE(2.4.1.7)WY	26	53	5	-0.19	-0.02	0.02	0.86	0.14	0.00
Min My	MC|ASCE(2.4.1.3)S	16	56	5	0.23	0.00	-0.07	-0.96	0.00	0.00
Max Mz	MC|ASCE(2.4.1.5)WY	18	52	5	-0.36	-0.01	-0.03	0.25	0.14	0.00
Min Mz	MC|ASCE(2.4.1.7)WY	26	49	5	-0.40	0.01	-0.02	0.37	-0.14	0.00

End Plate Connection Results

Label	C. Num	Fh	Fv	My	Tu(K) Bolt / Weld	Vu(K) Bolt / Weld	Tn(K) Bolt / Weld	Vn(K) Bolt / Weld	Req. Size(in) Bolt / Weld	Mu(K-in) Plate	Rqd. T(in) Plate / Flange	Act. T(in) Plate / Flange	Che
Max Mz	18	-0.34	0.13	0.25	0.60	0.22	44.00	21.00	0.07	0.01	0.04	0.63	True
					0.23	0.05	21.00	21.00	0.00		0.00	0.00	
Min Mz	26	-0.38	0.13	0.37	0.74	0.22	44.00	21.00	0.08	0.01	0.04	0.63	True
					0.27	0.05	21.00	21.00	0.00		0.00	0.00	
Max Fx	21	0.32	0.05	-0.82	0.42	0.09	44.00	21.00	0.06	0.01	0.03	0.63	True
					0.07	0.02	21.00	21.00	0.00		0.00	0.00	
Min Fx	26	-0.38	0.13	0.37	0.74	0.22	44.00	21.00	0.08	0.01	0.04	0.63	True
					0.27	0.05	21.00	21.00	0.00		0.00	0.00	
Max Fy	18	-0.15	0.04	0.73	0.81	0.06	44.00	21.00	0.08	0.01	0.05	0.63	True
					0.26	0.02	21.00	21.00	0.00		0.00	0.00	
Min Fy	26	-0.19	0.04	0.86	0.95	0.06	44.00	21.00	0.09	0.01	0.05	0.63	True
					0.30	0.02	21.00	21.00	0.00		0.00	0.00	
Max Fz	26	0.15	0.10	0.22	0.08	0.16	44.00	21.00	0.05	0.00	0.01	0.63	True
					0.04	0.04	21.00	21.00	0.00		0.00	0.00	
Min Fz	16	0.24	0.00	-0.96	0.57	0.00	44.00	21.00	0.07	0.01	0.04	0.63	True
					0.12	0.00	21.00	21.00	0.00		0.00	0.00	
Max Mx	18	-0.15	0.04	0.73	0.81	0.06	44.00	21.00	0.08	0.01	0.05	0.63	True
					0.26	0.02	21.00	21.00	0.00		0.00	0.00	
Min Mx	26	-0.19	0.04	0.86	0.95	0.06	44.00	21.00	0.09	0.01	0.05	0.63	True
					0.30	0.02	21.00	21.00	0.00		0.00	0.00	
Max My	26	-0.19	0.04	0.86	0.95	0.06	44.00	21.00	0.09	0.01	0.05	0.63	True
					0.30	0.02	21.00	21.00	0.00		0.00	0.00	
Min My	16	0.24	0.00	-0.96	0.57	0.00	44.00	21.00	0.07	0.01	0.04	0.63	True
					0.12	0.00	21.00	21.00	0.00		0.00	0.00	

RFRS1 Rafter

Title:	RFRS1
Count:	8
Horizontal Angle Start end:	0.00
Horizontal Angle Finish end:	0.00
Vertical Angle Start end:	17.12
Vertical Angle Finish end:	-36.44
Ky	2.10
Kz	2.10
L(ft)	8.37
Ly(ft)	4.18
Lz(ft)	4.18

Section Properties

Name	HSS5X5X0.125
Depth (in)	5.00
Width (in)	5.00
Nominal Thickness (in)	0.13
Design Thickness (in)	0.12
Area (in^2)	2.23
MOI Strong (in^4)	8.80
MOI weak (in^4)	8.80
Section Mod. Strong (in^3)	3.52
Section Mod. Weak (in^3)	3.52
Fy (ksi)	46

Design Envelope

Label	C. Name	C. Num	Rbt. Num.	Bar	Location	Fx (K)	Fy (K)	Fz (K)	My (K-in)	Mz (K-in)	Allow. Increase
Max Fx	MC|ASCE(2.4.1.3)S	16	17	1	5.49	0.00	0.23	0.00	0.00	0.00
Min Fx	MC|ASCE(2.4.1.7)WY	26	17	3	-2.64	-0.02	-0.14	-6.79	1.06	0.00
Max Fy	MC|ASCE(2.4.1.5)WX	17	22	1	-2.06	0.02	-0.10	0.00	0.00	0.00
Min Fy	MC|ASCE(2.4.1.7)WX	25	19	3	-2.64	-0.02	-0.14	-6.78	1.06	0.00
Max Fz	MC|ASCE(2.4.1.3)S	16	17	1	5.49	0.00	0.23	0.00	0.00	0.00
Min Fz	MC|ASCE(2.4.1.3)S	16	24	5	3.83	0.00	-0.15	3.78	0.00	0.00
Max Mx	MC|ASCE(2.4.1.1)D	15	17	1	1.45	0.00	0.06	0.00	0.00	0.00
Min Mx	MC|ASCE(2.4.1.8)EY	28	24	5	0.59	-0.01	-0.02	1.09	-0.10	0.00
Max My	MC|ASCE(2.4.1.3)S	16	17	3	5.48	0.00	0.20	10.67	0.00	0.00
Min My	MC|ASCE(2.4.1.7)WX	25	23	3	-2.26	0.01	-0.15	-7.09	-0.43	0.00
Max Mz	MC|ASCE(2.4.1.5)WX	17	19	3	-2.07	-0.02	-0.13	-5.83	1.06	0.00
Min Mz	MC|ASCE(2.4.1.7)WX	25	22	3	-1.89	-0.02	0.06	-6.78	-1.06	0.00

Compactness: Slender

Slender Section Properties

Label	C. Num	Axis	P (K)	Mprime (K-in)	M orth (K-in)	Atrans (in^2)	Itrans (in^4)	StransB (in^3)	StransT (in^4)	Qa	Fa (ksi)
Min Fy	25	z	-2.64	1.06	6.78	2.18	7.93	3.25	3.10	0.98	21.83
Min Fy	25	y	-2.64	6.78	1.06	2.18	7.93	3.25	3.10	0.98	13.12
Max Fz	16	y	5.49	0.00	0.00	2.18	7.93	3.25	3.10	0.98	13.12
Min Fz	16	y	3.83	3.78	0.00	2.19	8.05	3.27	3.17	0.98	13.14
Max Mx	15	y	1.45	0.00	0.00	2.18	7.93	3.25	3.10	0.98	13.12
Min Mx	28	z	0.59	0.10	1.09	2.18	7.93	3.25	3.10	0.98	21.83
Min Mx	28	y	0.59	1.09	0.10	2.18	7.93	3.25	3.10	0.98	13.12
Max My	16	y	5.48	10.67	0.00	2.23	8.80	3.52	3.52	1.00	13.18
Min My	25	z	-2.26	0.43	7.09	2.18	7.93	3.25	3.10	0.98	21.83
Min My	25	y	-2.26	7.09	0.43	2.18	7.93	3.25	3.10	0.98	13.12
Max Mz	17	z	-2.07	1.06	5.83	2.18	7.93	3.25	3.10	0.98	21.83
Max Mz	17	y	-2.07	5.83	1.06	2.18	7.93	3.25	3.10	0.98	13.12
Min Mz	25	z	-1.89	1.06	6.78	2.18	7.93	3.25	3.10	0.98	21.83
Min Mz	25	y	-1.89	6.78	1.06	2.18	7.93	3.25	3.10	0.98	13.12
Min Fx	26	z	-2.64	1.06	6.79	2.18	7.93	3.25	3.10	0.98	21.83
Min Fx	26	y	-2.64	6.79	1.06	2.18	7.93	3.25	3.10	0.98	13.12
Max Fx	16	y	5.49	0.00	0.00	2.18	7.93	3.25	3.10	0.98	13.12

Member Design Results

Label	C. Name	fa	Fa	fby	Fby	fbz	Fbz	F'ey	F'ez	Stress Ratio	Allow Increa	ASD OK
Max Fx	MC|ASCE(2.4.1.3)S	2.46	13.12	0.00	27.60	0.00	27.60	53.19	53.19	0.19	0.00	True
Min Fx	MC|ASCE(2.4.1.7)WY	1.19	13.12	2.19	27.60	0.34	27.60	53.19	53.19	0.18	0.00	True
Max Fy	MC|ASCE(2.4.1.5)WX	0.92	27.60	0.00	27.60	0.00	27.60	53.19	53.19	0.03	0.00	True
Min Fy	MC|ASCE(2.4.1.7)WX	1.19	13.12	2.19	27.60	0.34	27.60	53.19	53.19	0.18	0.00	True
Max Fz	MC|ASCE(2.4.1.3)S	2.46	13.12	0.00	27.60	0.00	27.60	53.19	53.19	0.19	0.00	True
Min Fz	MC|ASCE(2.4.1.3)S	1.72	13.14	1.19	27.60	0.00	27.60	53.19	53.19	0.17	0.00	True
Max Mx	MC|ASCE(2.4.1.1)D	0.65	13.12	0.00	27.60	0.00	27.60	53.19	53.19	0.05	0.00	True
Min Mx	MC|ASCE(2.4.1.8)EY	0.26	13.12	0.35	27.60	0.03	27.60	53.19	53.19	0.03	0.00	True
Max My	MC|ASCE(2.4.1.3)S	2.46	13.18	3.03	27.60	0.00	27.60	53.19	53.19	0.28	0.00	True
Min My	MC|ASCE(2.4.1.7)WX	1.01	13.12	2.29	27.60	0.14	27.60	53.19	53.19	0.17	0.00	True
Max Mz	MC|ASCE(2.4.1.5)WX	0.93	13.12	1.88	27.60	0.34	27.60	53.19	53.19	0.15	0.00	True
Min Mz	MC|ASCE(2.4.1.7)WX	0.85	13.12	2.19	27.60	0.34	27.60	53.19	53.19	0.16	0.00	True

RFRS1 I end - End Plate Connection

END PLATE								
	Depth of Cut (in)	5.23	Length (in)	5.63	Bolt Count	2	Weld Size	0.13
	Width of cut (in)	5.00	Width (in)	5.00	Bolt Size (in)	0.63	Weld	Square
			Thick (in)	0.63	Vert. Spread(in)	0.00		
			Angle (deg)	90.00	Hor. Spread(in)	2.63		
			Fu	58.00	Flange	0.00		
			Fy	36.00				

Design Envelope

Label	C. Name	C. Num	Rbt. Bar Num.	Location	Fx (K)	Fy (K)	Fz (K)	My (K-in)	Mz (K-in)	Allow. Increase
Max Fx	MC|ASCE(2.4.1.3)S	16	17	1	5.49	0.00	0.23	0.00	0.00	0.00
Min Fx	MC|ASCE(2.4.1.7)WY	26	20	1	-2.64	0.02	-0.13	0.00	0.00	0.00
Max Fy	MC|ASCE(2.4.1.5)WX	17	22	1	-2.06	0.02	-0.10	0.00	0.00	0.00
Min Fy	MC|ASCE(2.4.1.7)WX	25	19	1	-2.64	-0.02	-0.13	0.00	0.00	0.00
Max Fz	MC|ASCE(2.4.1.3)S	16	17	1	5.49	0.00	0.23	0.00	0.00	0.00
Min Fz	MC|ASCE(2.4.1.7)WX	25	23	1	-2.25	0.01	-0.13	0.00	0.00	0.00
Max Mx	MC|ASCE(2.4.1.1)D	15	17	1	1.45	0.00	0.06	0.00	0.00	0.00
Min Mx	MC|ASCE(2.4.1.8)EY	28	24	1	0.79	0.01	0.05	0.00	0.00	0.00
Max My	MC|ASCE(2.4.1.1)D	15	17	1	1.45	0.00	0.06	0.00	0.00	0.00
Min My	MC|ASCE(2.4.1.8)EY	28	24	1	0.79	0.01	0.05	0.00	0.00	0.00
Max Mz	MC|ASCE(2.4.1.1)D	15	17	1	1.45	0.00	0.06	0.00	0.00	0.00
Min Mz	MC|ASCE(2.4.1.8)EY	28	24	1	0.79	0.01	0.05	0.00	0.00	0.00

End Plate Connection Results

Label	C. Num	Fh	Fv	My	Tu(K) Bolt / Weld	Vu(K) Bolt / Weld	Tn(K) Bolt / Weld	Vn(K) Bolt / Weld	Req. Size(in) Bolt / Weld	Mu(K-in) Plate	Rqd. T(in) Plate Flange	Act. T(in) Plate Flange	Chec
Max Fx	16	5.18	1.83	0.00	-4.22	2.99	43.55	21.00	0.24	-0.05	0.00	0.63	True
					2.15	0.72	21.00	21.00	0.00		0.00	0.00	
Min Fx	26	-2.48	0.90	0.00	2.33	1.46	43.89	21.00	0.16	0.03	0.08	0.63	True
					1.03	0.35	21.00	21.00	0.01		0.00	0.00	
Max Fy	17	-1.94	0.70	0.00	1.82	1.15	43.93	21.00	0.15	0.02	0.07	0.63	True
					0.81	0.27	21.00	21.00	0.00		0.00	0.00	
Min Fy	25	-2.48	0.90	0.00	2.33	1.46	43.89	21.00	0.16	0.03	0.08	0.63	True
					1.03	0.35	21.00	21.00	0.01		0.00	0.00	
Max Fz	16	5.18	1.83	0.00	-4.22	2.99	43.55	21.00	0.24	-0.05	0.00	0.63	True
					2.15	0.72	21.00	21.00	0.00		0.00	0.00	
Min Fz	25	-2.12	0.79	0.00	1.98	1.29	43.92	21.00	0.15	0.02	0.07	0.63	True
					0.88	0.31	21.00	21.00	0.00		0.00	0.00	
Max Mx	15	1.36	0.49	0.00	-1.11	0.79	43.97	21.00	0.12	-0.01	0.00	0.63	True
					0.57	0.19	21.00	21.00	0.00		0.00	0.00	
Min Mx	28	0.74	0.28	0.00	-0.61	0.45	43.99	21.00	0.09	-0.01	0.00	0.63	True
					0.31	0.11	21.00	21.00	0.00		0.00	0.00	
Max My	15	1.36	0.49	0.00	-1.11	0.79	43.97	21.00	0.12	-0.01	0.00	0.63	True
					0.57	0.19	21.00	21.00	0.00		0.00	0.00	
Min My	28	0.74	0.28	0.00	-0.61	0.45	43.99	21.00	0.09	-0.01	0.00	0.63	True
					0.31	0.11	21.00	21.00	0.00		0.00	0.00	
Max Mz	15	1.36	0.49	0.00	-1.11	0.79	43.97	21.00	0.12	-0.01	0.00	0.63	True
					0.57	0.19	21.00	21.00	0.00		0.00	0.00	
Min Mz	28	0.74	0.28	0.00	-0.61	0.45	43.99	21.00	0.09	-0.01	0.00	0.63	True
					0.31	0.11	21.00	21.00	0.00		0.00	0.00	

RFRS1 J end - Welded Connection

WELD				
	Depth(in)	6.22	Throat Size(in)	0.13
	Width (in)	5.00	Type	Square

Design Envelope

Label	C. Name	C. Num	Rbt. Num.	Bar	Location	Fx (K)	Fy (K)	Fz (K)	My (K-in)	Mz (K-in)	Allow. Increase
Max Fx	MC|ASCE(2.4.1.3)S	16	17	5	3.83	0.00	-0.15	3.78	0.00	0.00
Min Fx	MC|ASCE(2.4.1.7)WY	26	20	5	-1.89	-0.02	0.04	-4.15	-0.21	0.00
Max Fy	MC|ASCE(2.4.1.5)WX	17	19	5	-1.47	0.02	0.03	-3.64	0.21	0.00
Min Fy	MC|ASCE(2.4.1.7)WX	25	22	5	-1.89	-0.02	0.04	-4.15	-0.21	0.00
Max Fz	MC|ASCE(2.4.1.7)WY	26	22	5	-1.20	0.00	0.09	-0.71	-0.14	0.00
Min Fz	MC|ASCE(2.4.1.3)S	16	24	5	3.83	0.00	-0.15	3.78	0.00	0.00
Max Mx	MC|ASCE(2.4.1.1)D	15	17	5	1.05	0.00	-0.04	1.29	0.00	0.00
Min Mx	MC|ASCE(2.4.1.8)EY	28	24	5	0.59	-0.01	-0.02	1.09	-0.10	0.00
Max My	MC|ASCE(2.4.1.6)WX	21	20	5	1.48	0.01	-0.05	5.22	0.01	0.00
Min My	MC|ASCE(2.4.1.7)WY	26	20	5	-1.89	-0.02	0.04	-4.15	-0.21	0.00
Max Mz	MC|ASCE(2.4.1.5)WX	17	18	5	-1.15	0.00	0.04	-3.32	0.34	0.00
Min Mz	MC|ASCE(2.4.1.7)WX	25	23	5	-1.57	0.00	0.06	-3.84	-0.34	0.00

WELDED CONNECTION RESULTS

Label	C. Num	Vn (K/in)	Vu (K/in)	Tn (K/in)	Tu (K/in)	Required Throat (in)	Check
Min Mz	25	2.63	0.04	2.63	0.00	0.0021	True
Max Fx	16	2.63	0.11	2.63	-0.13	0.0051	True
Min Fx	26	2.63	0.05	2.63	-0.01	0.0025	True
Max Fy	17	2.63	0.04	2.63	0.00	0.0019	True
Min Fy	25	2.63	0.05	2.63	-0.01	0.0025	True
Max Fz	26	2.63	0.03	2.63	-0.05	0.0017	True
Min Fz	16	2.63	0.11	2.63	-0.13	0.0051	True
Max Mx	15	2.63	0.03	2.63	-0.03	0.0014	True
Min Mx	28	2.63	0.02	2.63	-0.01	0.0008	True
Max My	21	2.63	0.04	2.63	0.04	0.0019	True
Min My	26	2.63	0.05	2.63	-0.01	0.0025	True
Max Mz	17	2.63	0.03	2.63	0.02	0.0015	True

RS1

Title:	RS1
Count:	8
Horizontal Angle Start end:	0.00
Horizontal Angle Finish end:	0.00
Vertical Angle Start end:	36.44
Vertical Angle Finish end:	72.88
Ky	1.20
Kz	1.20
L(ft)	2.00
Ly(ft)	2.00
Lz(ft)	2.00

Section Properties

Name	HSS5X5X0.187
Depth (in)	5.00
Width (in)	5.00
Nominal Thickness (in)	0.19
Design Thickness (in)	0.17
Area (in^2)	3.28
MOI Strong (in^4)	12.60
MOI weak (in^4)	12.60
Section Mod. Strong (in^3)	5.03
Section Mod. Weak (in^3)	5.03
Fy (ksi)	46

Design Envelope

Label	C. Name	C. Num	Rbt. Bar Num.	Location	Fx (K)	Fy (K)	Fz (K)	My (K-in)	Mz (K-in)	Allow. Increase
Max Fx	MC|ASCE(2.4.1.3)S	16	33	1	0.76	0.00	0.43	-3.78	0.00	0.00
Min Fx	MC|ASCE(2.4.1.7)WY	26	36	5	-0.43	-0.15	-0.44	-6.52	3.56	0.00
Max Fy	MC|ASCE(2.4.1.5)WY	18	33	1	-0.33	0.15	-0.39	3.64	-0.06	0.00
Min Fy	MC|ASCE(2.4.1.7)WY	26	36	5	-0.43	-0.15	-0.44	-6.52	3.56	0.00
Max Fz	MC|ASCE(2.4.1.3)S	16	33	1	0.76	0.00	0.43	-3.78	0.00	0.00
Min Fz	MC|ASCE(2.4.1.7)WY	26	36	5	-0.43	-0.15	-0.44	-6.52	3.56	0.00
Max Mx	MC|ASCE(2.4.1.5)WX	17	34	1	-0.23	0.10	-0.23	3.32	-0.10	0.00
Min Mx	MC|ASCE(2.4.1.7)WX	25	39	5	-0.33	-0.10	-0.28	-2.84	2.55	0.00
Max My	MC|ASCE(2.4.1.3)S	16	33	5	0.74	0.00	0.43	6.46	0.00	0.00
Min My	MC|ASCE(2.4.1.7)WY	26	36	5	-0.43	-0.15	-0.44	-6.52	3.56	0.00
Max Mz	MC|ASCE(2.4.1.5)WY	18	36	5	-0.36	-0.15	-0.39	-5.81	3.56	0.00
Min Mz	MC|ASCE(2.4.1.7)WY	26	33	5	-0.43	0.15	-0.44	-6.52	-3.56	0.00

Compactness: Compact

Member Design Results

Label	C. Name	fa	Fa	fby	Fby	fbz	Fbz	F'ey	F'ez	Stress Ratio	Allow Increa	ASD OK
Max Fz	MC|ASCE(2.4.1.3)S	0.23	26.58	0.75	30.36	0.00	30.36	691.64	691.64	0.03	0.00	True
Min Fz	MC|ASCE(2.4.1.7)WY	0.13	27.60	1.30	30.36	0.71	30.36	691.64	691.64	0.07	0.00	True
Max Mx	MC|ASCE(2.4.1.5)WX	0.07	27.60	0.66	30.36	0.02	30.36	691.64	691.64	0.02	0.00	True
Min Mx	MC|ASCE(2.4.1.7)WX	0.10	27.60	0.57	30.36	0.51	30.36	691.64	691.64	0.04	0.00	True
Max My	MC|ASCE(2.4.1.3)S	0.23	26.58	1.28	30.36	0.00	30.36	691.64	691.64	0.05	0.00	True
Min My	MC|ASCE(2.4.1.7)WY	0.13	27.60	1.30	30.36	0.71	30.36	691.64	691.64	0.07	0.00	True
Max Mz	MC|ASCE(2.4.1.5)WY	0.11	27.60	1.15	30.36	0.71	30.36	691.64	691.64	0.07	0.00	True
Min Mz	MC|ASCE(2.4.1.7)WY	0.13	27.60	1.30	30.36	0.71	30.36	691.64	691.64	0.07	0.00	True
Max Fx	MC|ASCE(2.4.1.3)S	0.23	26.58	0.75	30.36	0.00	30.36	691.64	691.64	0.03	0.00	True
Min Fx	MC|ASCE(2.4.1.7)WY	0.13	27.60	1.30	30.36	0.71	30.36	691.64	691.64	0.07	0.00	True
Max Fy	MC|ASCE(2.4.1.5)WY	0.10	27.60	0.72	30.36	0.01	30.36	691.64	691.64	0.03	0.00	True
Min Fy	MC|ASCE(2.4.1.7)WY	0.13	27.60	1.30	30.36	0.71	30.36	691.64	691.64	0.07	0.00	True

RS1 I end - Welded Connection

WELD			
	Depth(in)	6.22	Throat Size(in) 0.13
	Width (in)	5.00	Type Square

Design Envelope

Label	C. Name	C. Num	Rbt. Bar Num.	Location	Fx (K)	Fy (K)	Fz (K)	My (K-in)	Mz (K-in)	Allow. Increase
Max Fx	MC|ASCE(2.4.1.3)S	16	33	1	0.76	0.00	0.43	-3.78	0.00	0.00
Min Fx	MC|ASCE(2.4.1.7)WY	26	36	1	-0.42	-0.15	-0.44	4.15	0.06	0.00
Max Fy	MC|ASCE(2.4.1.5)WY	18	33	1	-0.33	0.15	-0.39	3.64	-0.06	0.00
Min Fy	MC|ASCE(2.4.1.7)WY	26	36	1	-0.42	-0.15	-0.44	4.15	0.06	0.00
Max Fz	MC|ASCE(2.4.1.3)S	16	33	1	0.76	0.00	0.43	-3.78	0.00	0.00
Min Fz	MC|ASCE(2.4.1.7)WY	26	36	1	-0.42	-0.15	-0.44	4.15	0.06	0.00
Max Mx	MC|ASCE(2.4.1.5)WX	17	34	1	-0.23	0.10	-0.23	3.32	-0.10	0.00
Min Mx	MC|ASCE(2.4.1.7)WX	25	39	1	-0.31	-0.10	-0.28	3.84	0.10	0.00
Max My	MC|ASCE(2.4.1.7)WY	26	33	1	-0.42	0.15	-0.44	4.15	-0.06	0.00
Min My	MC|ASCE(2.4.1.6)WX	21	37	1	0.31	-0.06	0.34	-5.22	0.00	0.00
Max Mz	MC|ASCE(2.4.1.5)WX	17	39	1	-0.23	-0.10	-0.23	3.32	0.10	0.00
Min Mz	MC|ASCE(2.4.1.7)WX	25	34	1	-0.31	0.10	-0.28	3.84	-0.10	0.00

WELDED CONNECTION RESULTS

Label	C. Num	Vn (K/in)	Vu (K/in)	Tn (K/in)	Tu (K/in)	Required Throat (in)	Check
Max Fx	16	2.63	0.04	2.63	0.05	0.0026	True
Min Fx	26	2.63	0.03	2.63	0.06	0.0029	True
Max Fy	18	2.63	0.02	2.63	0.05	0.0026	True
Min Fy	26	2.63	0.03	2.63	0.06	0.0029	True
Max Fz	16	2.63	0.04	2.63	0.05	0.0026	True
Min Fz	26	2.63	0.03	2.63	0.06	0.0029	True
Max Mx	17	2.63	0.01	2.63	0.06	0.0028	True
Min Mx	25	2.63	0.02	2.63	0.06	0.0031	True
Max My	26	2.63	0.03	2.63	0.06	0.0029	True
Min My	21	2.63	0.02	2.63	0.11	0.0052	True
Max Mz	17	2.63	0.01	2.63	0.06	0.0028	True
Min Mz	25	2.63	0.02	2.63	0.06	0.0031	True

RT1 Rafter Tail

Title:	RT1
Count:	8
Horizontal Angle Start end:	-17.12
Horizontal Angle Finish end:	0.00
Vertical Angle Start end:	0.00
Vertical Angle Finish end:	0.00
Ky	2.10
Kz	2.10
L(ft)	2.27
Ly(ft)	2.27
Lz(ft)	2.27

Section Properties

Name	HSS5X3X0.125
Depth (in)	5.00
Width (in)	3.00
Nominal Thickness (in)	0.13
Design Thickness (in)	0.12
Area (in^2)	1.77
MOI Strong (in^4)	6.03
MOI weak (in^4)	2.75
Section Mod. Strong (in^3)	2.41
Section Mod. Weak (in^3)	1.83
Fy (ksi)	46

Design Envelope

Label	C. Name	C. Num	Rbt. Num.	Bar	Location	Fx (K)	Fy (K)	Fz (K)	My (K-in)	Mz (K-in)	Allow. Increase
Max Fx	MC|ASCE(2.4.1.7)WX	25	81	2	0.01	-0.02	0.00	0.00	-0.09		0.00
Min Fx	MC|ASCE(2.4.1.3)S	16	88	1	-0.02	0.05	0.00	0.00	0.67		0.00
Max Fy	MC|ASCE(2.4.1.3)S	16	81	1	-0.02	0.05	0.00	0.00	0.67		0.00
Min Fy	MC|ASCE(2.4.1.7)WY	26	88	2	0.01	-0.02	0.00	0.00	-0.09		0.00
Max Fz	MC|ASCE(2.4.1.5)EY	20	81	1	-0.01	0.02	0.00	-0.04	0.24		0.00
Min Fz	MC|ASCE(2.4.1.5)EY	20	85	2	0.00	0.01	0.00	0.02	0.13		0.00
Max Mx	MC|ASCE(2.4.1.1)D	15	81	1	-0.01	0.02	0.00	0.00	0.24		0.00
Min Mx	MC|ASCE(2.4.1.8)EY	28	88	5	0.00	0.00	0.00	0.00	0.00		0.00
Max My	MC|ASCE(2.4.1.5)EX	19	82	1	-0.01	0.02	0.00	0.04	0.24		0.00
Min My	MC|ASCE(2.4.1.5)EY	20	88	1	0.00	0.02	0.00	-0.04	0.25		0.00
Max Mz	MC|ASCE(2.4.1.3)S	16	81	1	-0.02	0.05	0.00	0.00	0.67		0.00
Min Mz	MC|ASCE(2.4.1.7)WY	26	88	1	0.00	-0.01	0.00	0.00	-0.20		0.00

Compactness: Slender

Slender Section Properties

Label	C. Num	Axis	P (K)	Mprime (K-in)	M orth (K-in)	Atrans (in^2)	Itrans (in^4)	StransB (in^3)	StransT (in^4)	Qa	Fa (ksi)
Max Fx	25	z	0.00	0.09	0.00	1.72	2.45	1.68	1.58	0.97	22.64
Min Fx	16	z	-0.02	0.67	0.00	1.72	2.45	1.68	1.58	0.97	22.64
Max Fy	16	z	-0.02	0.67	0.00	1.72	2.45	1.68	1.58	0.97	22.64
Min Fy	26	z	0.00	0.09	0.00	1.72	2.45	1.68	1.58	0.97	22.64
Max Fz	20	z	-0.01	0.24	0.04	1.72	2.45	1.68	1.58	0.97	22.64
Min Fz	20	z	0.00	0.13	0.02	1.72	2.45	1.68	1.58	0.97	22.64
Max Mx	15	z	-0.01	0.24	0.00	1.72	2.45	1.68	1.58	0.97	22.64
Max My	19	z	-0.01	0.24	0.04	1.72	2.45	1.68	1.58	0.97	22.64
Min My	20	z	0.00	0.25	0.04	1.72	2.45	1.68	1.58	0.97	22.64
Max Mz	16	z	-0.02	0.67	0.00	1.72	2.45	1.68	1.58	0.97	22.64
Min Mz	26	z	0.00	0.20	0.00	1.72	2.45	1.68	1.58	0.97	22.64

Member Design Results

Label	C. Name	fa	Fa	fby	Fby	fbz	Fbz	F'ey	F'ez	Stress Ratio	Allow Increa	ASD OK
Max Fx	MC|ASCE(2.4.1.7)WX	0.00	22.64	0.00	27.60	0.06	27.60	156.64	71.51	0.00	0.00	True
Min Fx	MC|ASCE(2.4.1.3)S	0.01	22.64	0.00	27.60	0.42	27.60	156.64	71.51	0.02	0.00	True
Max Fy	MC|ASCE(2.4.1.3)S	0.01	22.64	0.00	27.60	0.42	27.60	156.64	71.51	0.02	0.00	True
Min Fy	MC|ASCE(2.4.1.7)WY	0.00	22.64	0.00	27.60	0.06	27.60	156.64	71.51	0.00	0.00	True
Max Fz	MC|ASCE(2.4.1.5)EY	0.00	22.64	0.02	27.60	0.15	27.60	156.64	71.51	0.01	0.00	True
Min Fz	MC|ASCE(2.4.1.5)EY	0.00	22.64	0.01	27.60	0.09	27.60	156.64	71.51	0.00	0.00	True
Max Mx	MC|ASCE(2.4.1.1)D	0.00	22.64	0.00	27.60	0.15	27.60	156.64	71.51	0.01	0.00	True
Min Mx	MC|ASCE(2.4.1.8)EY	0.00	27.60	0.00	27.60	0.00	27.60	156.64	71.51	0.00	0.00	True
Max My	MC|ASCE(2.4.1.5)EX	0.00	22.64	0.02	27.60	0.15	27.60	156.64	71.51	0.01	0.00	True
Min My	MC|ASCE(2.4.1.5)EY	0.00	22.64	0.02	27.60	0.16	27.60	156.64	71.51	0.01	0.00	True
Max Mz	MC|ASCE(2.4.1.3)S	0.01	22.64	0.00	27.60	0.42	27.60	156.64	71.51	0.02	0.00	True
Min Mz	MC|ASCE(2.4.1.7)WY	0.00	22.64	0.00	27.60	0.12	27.60	156.64	71.51	0.00	0.00	True

RT1 I end - Welded Connection

WELD

Depth(in)	5.00	Throat Size(in)	0.13
Width (in)	3.14	Type	Square

Design Envelope

Label	C. Name	C. Num	Rbt. Bar Num.	Location	Fx (K)	Fy (K)	Fz (K)	My (K-in)	Mz (K-in)	Allow. Increase
Max Fx	MC|ASCE(2.4.1.7)WX	25	81	1	0.00	-0.01	0.00	0.00	-0.20	0.00
Min Fx	MC|ASCE(2.4.1.3)S	16	88	1	-0.02	0.05	0.00	0.00	0.67	0.00
Max Fy	MC|ASCE(2.4.1.3)S	16	81	1	-0.02	0.05	0.00	0.00	0.67	0.00
Min Fy	MC|ASCE(2.4.1.7)WY	26	88	1	0.00	-0.01	0.00	0.00	-0.20	0.00
Max Fz	MC|ASCE(2.4.1.5)EY	20	81	1	-0.01	0.02	0.00	-0.04	0.24	0.00
Min Fz	MC|ASCE(2.4.1.5)EY	20	85	1	0.00	0.02	0.00	0.04	0.25	0.00
Max Mx	MC|ASCE(2.4.1.1)D	15	81	1	-0.01	0.02	0.00	0.00	0.24	0.00
Min Mx	MC|ASCE(2.4.1.8)EY	28	88	1	0.00	0.01	0.00	-0.03	0.15	0.00
Max My	MC|ASCE(2.4.1.5)EX	19	82	1	-0.01	0.02	0.00	0.04	0.24	0.00
Min My	MC|ASCE(2.4.1.5)EY	20	88	1	0.00	0.02	0.00	-0.04	0.25	0.00
Max Mz	MC|ASCE(2.4.1.3)S	16	81	1	-0.02	0.05	0.00	0.00	0.67	0.00
Min Mz	MC|ASCE(2.4.1.7)WY	26	88	1	0.00	-0.01	0.00	0.00	-0.20	0.00

WELDED CONNECTION RESULTS

Label	C. Num	Vn (K/in)	Vu (K/in)	Tn (K/in)	Tu (K/in)	Required Throat (in)	Check
Max Fx	25	2.63	0.00	2.63	0.01	0.0005	True
Min Fx	16	2.63	0.00	2.63	0.03	0.0016	True
Max Fy	16	2.63	0.00	2.63	0.03	0.0016	True
Min Fy	26	2.63	0.00	2.63	0.01	0.0005	True
Max Fz	20	2.63	0.00	2.63	0.01	0.0006	True
Min Fz	20	2.63	0.00	2.63	0.01	0.0007	True
Max Mx	15	2.63	0.00	2.63	0.01	0.0006	True
Min Mx	28	2.63	0.00	2.63	0.01	0.0004	True
Max My	19	2.63	0.00	2.63	0.01	0.0006	True
Min My	20	2.63	0.00	2.63	0.01	0.0007	True
Max Mz	16	2.63	0.00	2.63	0.03	0.0016	True
Min Mz	26	2.63	0.00	2.63	0.01	0.0005	True

RT2 Rafter Tail

Title:	RT2
Count:	8
Horizontal Angle Start end:	-17.12
Horizontal Angle Finish end:	0.00
Vertical Angle Start end:	0.00
Vertical Angle Finish end:	0.00
Ky	2.10
Kz	2.10
L(ft)	1.61
Ly(ft)	1.61
Lz(ft)	1.61

Section Properties

Name	HSS5X3X0.125
Depth (in)	5.00
Width (in)	3.00
Nominal Thickness (in)	0.13
Design Thickness (in)	0.12
Area (in^2)	1.77
MOI Strong (in^4)	6.03
MOI weak (in^4)	2.75
Section Mod. Strong (in^3)	2.41
Section Mod. Weak (in^3)	1.83
Fy (ksi)	46

Design Envelope

Label	C. Name	C. Num	Rbt. Num.	Bar	Location	Fx (K)	Fy (K)	Fz (K)	My (K-in)	Mz (K-in)	Allow. Increase
Max Fx	MC|ASCE(2.4.1.7)WX	25	89	2	0.00	-0.01	0.00	0.00	-0.03		0.00
Min Fx	MC|ASCE(2.4.1.3)S	16	96	1	-0.01	0.03	0.00	0.00	0.29		0.00
Max Fy	MC|ASCE(2.4.1.3)S	16	89	1	-0.01	0.03	0.00	0.00	0.29		0.00
Min Fy	MC|ASCE(2.4.1.7)WY	26	96	2	0.00	-0.01	0.00	0.00	-0.03		0.00
Max Fz	MC|ASCE(2.4.1.5)EY	20	89	1	0.00	0.01	0.00	-0.02	0.11		0.00
Min Fz	MC|ASCE(2.4.1.5)EY	20	93	2	0.00	0.01	0.00	0.01	0.06		0.00
Max Mx	MC|ASCE(2.4.1.1)D	15	89	1	0.00	0.01	0.00	0.00	0.12		0.00
Min Mx	MC|ASCE(2.4.1.8)EY	28	96	5	0.00	0.00	0.00	0.00	0.00		0.00
Max My	MC|ASCE(2.4.1.5)EX	19	90	1	0.00	0.01	0.00	0.02	0.11		0.00
Min My	MC|ASCE(2.4.1.5)EY	20	96	1	0.00	0.01	0.00	-0.02	0.12		0.00
Max Mz	MC|ASCE(2.4.1.3)S	16	89	1	-0.01	0.03	0.00	0.00	0.29		0.00
Min Mz	MC|ASCE(2.4.1.7)WY	26	96	1	0.00	-0.01	0.00	0.00	-0.07		0.00

Compactness: Slender

Slender Section Properties

Label	C. Num	Axis	P (K)	Mprime (K-in)	M orth (K-in)	Atrans (in^2)	Itrans (in^4)	StransB (in^3)	StransT (in^4)	Qa	Fa (ksi)
Max Fx	25	z	0.00	0.03	0.00	1.72	2.45	1.68	1.58	0.97	24.15
Min Fx	16	z	-0.01	0.29	0.00	1.72	2.45	1.68	1.58	0.97	24.15
Max Fy	16	z	-0.01	0.29	0.00	1.72	2.45	1.68	1.58	0.97	24.15
Min Fy	26	z	0.00	0.03	0.00	1.72	2.45	1.68	1.58	0.97	24.15
Max Fz	20	z	0.00	0.11	0.02	1.72	2.45	1.68	1.58	0.97	24.15
Min Fz	20	z	0.00	0.06	0.01	1.72	2.45	1.68	1.58	0.97	24.15
Max Mx	15	z	0.00	0.12	0.00	1.72	2.45	1.68	1.58	0.97	24.15
Max My	19	z	0.00	0.11	0.02	1.72	2.45	1.68	1.58	0.97	24.15
Min My	20	z	0.00	0.12	0.02	1.72	2.45	1.68	1.58	0.97	24.15
Max Mz	16	z	-0.01	0.29	0.00	1.72	2.45	1.68	1.58	0.97	24.15
Min Mz	26	z	0.00	0.07	0.00	1.72	2.45	1.68	1.58	0.97	24.15

Member Design Results

Label	C. Name	fa	Fa	fby	Fby	fbz	Fbz	F'ey	F'ez	Stress Ratio	Allow Increa	ASD OK
Max Fx	MC|ASCE(2.4.1.7)WX	0.00	24.15	0.00	27.60	0.02	27.60	311.29	142.12	0.00	0.00	True
Min Fx	MC|ASCE(2.4.1.3)S	0.01	24.15	0.00	27.60	0.18	27.60	311.29	142.12	0.01	0.00	True
Max Fy	MC|ASCE(2.4.1.3)S	0.01	24.15	0.00	27.60	0.18	27.60	311.29	142.12	0.01	0.00	True
Min Fy	MC|ASCE(2.4.1.7)WY	0.00	24.15	0.00	27.60	0.02	27.60	311.29	142.12	0.00	0.00	True
Max Fz	MC|ASCE(2.4.1.5)EY	0.00	24.15	0.01	27.60	0.07	27.60	311.29	142.12	0.00	0.00	True
Min Fz	MC|ASCE(2.4.1.5)EY	0.00	24.15	0.00	27.60	0.04	27.60	311.29	142.12	0.00	0.00	True
Max Mx	MC|ASCE(2.4.1.1)D	0.00	24.15	0.00	27.60	0.07	27.60	311.29	142.12	0.00	0.00	True
Min Mx	MC|ASCE(2.4.1.8)EY	0.00	27.60	0.00	27.60	0.00	27.60	311.29	142.12	0.00	0.00	True
Max My	MC|ASCE(2.4.1.5)EX	0.00	24.15	0.01	27.60	0.07	27.60	311.29	142.12	0.00	0.00	True
Min My	MC|ASCE(2.4.1.5)EY	0.00	24.15	0.01	27.60	0.07	27.60	311.29	142.12	0.00	0.00	True
Max Mz	MC|ASCE(2.4.1.3)S	0.01	24.15	0.00	27.60	0.18	27.60	311.29	142.12	0.01	0.00	True
Min Mz	MC|ASCE(2.4.1.7)WY	0.00	24.15	0.00	27.60	0.04	27.60	311.29	142.12	0.00	0.00	True

RT2 I end - Welded Connection

WELD

Depth(in)	5.00	Throat Size(in)	0.13
Width (in)	3.14	Type	Square

Design Envelope

Label	C. Name	C. Num	Rbt. Bar Num.	Location	Fx (K)	Fy (K)	Fz (K)	My (K-in)	Mz (K-in)	Allow. Increase
Max Fx	MC|ASCE(2.4.1.7)WX	25	89	1	0.00	-0.01	0.00	0.00	-0.07	0.00
Min Fx	MC|ASCE(2.4.1.3)S	16	96	1	-0.01	0.03	0.00	0.00	0.29	0.00
Max Fy	MC|ASCE(2.4.1.3)S	16	89	1	-0.01	0.03	0.00	0.00	0.29	0.00
Min Fy	MC|ASCE(2.4.1.7)WY	26	96	1	0.00	-0.01	0.00	0.00	-0.07	0.00
Max Fz	MC|ASCE(2.4.1.5)EY	20	89	1	0.00	0.01	0.00	-0.02	0.11	0.00
Min Fz	MC|ASCE(2.4.1.5)EY	20	93	1	0.00	0.01	0.00	0.02	0.12	0.00
Max Mx	MC|ASCE(2.4.1.1)D	15	89	1	0.00	0.01	0.00	0.00	0.12	0.00
Min Mx	MC|ASCE(2.4.1.8)EY	28	96	1	0.00	0.01	0.00	-0.01	0.07	0.00
Max My	MC|ASCE(2.4.1.5)EX	19	90	1	0.00	0.01	0.00	0.02	0.11	0.00
Min My	MC|ASCE(2.4.1.5)EY	20	96	1	0.00	0.01	0.00	-0.02	0.12	0.00
Max Mz	MC|ASCE(2.4.1.3)S	16	89	1	-0.01	0.03	0.00	0.00	0.29	0.00
Min Mz	MC|ASCE(2.4.1.7)WY	26	96	1	0.00	-0.01	0.00	0.00	-0.07	0.00

WELDED CONNECTION RESULTS

Label	C. Num	Vn (K/in)	Vu (K/in)	Tn (K/in)	Tu (K/in)	Required Throat (in)	Check
Max Fz	20	2.63	0.00	2.63	0.01	0.0003	True
Min Fz	20	2.63	0.00	2.63	0.01	0.0003	True
Max Mx	15	2.63	0.00	2.63	0.01	0.0003	True
Min Mx	28	2.63	0.00	2.63	0.00	0.0002	True
Max My	19	2.63	0.00	2.63	0.01	0.0003	True
Min My	20	2.63	0.00	2.63	0.01	0.0003	True
Max Mz	16	2.63	0.00	2.63	0.01	0.0007	True
Min Mz	26	2.63	0.00	2.63	0.00	0.0002	True
Max Fx	25	2.63	0.00	2.63	0.00	0.0002	True
Min Fx	16	2.63	0.00	2.63	0.01	0.0007	True
Max Fy	16	2.63	0.00	2.63	0.01	0.0007	True
Min Fy	26	2.63	0.00	2.63	0.00	0.0002	True

TB1 Tie Beam

Title:	TB1
Count:	8
Horizontal Angle Start end:	22.50
Horizontal Angle Finish end:	-22.50
Vertical Angle Start end:	0.00
Vertical Angle Finish end:	0.00
Ky	1.00
Kz	1.00
L(ft)	11.48
Ly(ft)	3.00
Lz(ft)	3.00

Section Properties

Name	HSS6X4X0.125
Depth (in)	6.00
Width (in)	4.00
Nominal Thickness (in)	0.13
Design Thickness (in)	0.12
Area (in^2)	2.23
MOI Strong (in^4)	11.40
MOI weak (in^4)	6.15
Section Mod. Strong (in^3)	3.81
Section Mod. Weak (in^3)	3.08
Fy (ksi)	46

Design Envelope

Label	C. Name	C. Num	Rbt. Num.	Bar	Location	Fx (K)	Fy (K)	Fz (K)	My (K-in)	Mz (K-in)	Allow. Increase
Max Fx	MC|ASCE(2.4.1.7)WY	26	9	1	3.24	0.00	-0.30	0.00	0.00	0.00
Min Fx	MC|ASCE(2.4.1.3)S	16	16	5	-6.76	0.00	-0.58	0.00	0.00	0.00
Max Fy	MC|ASCE(2.4.1.5)EY	20	10	1	-1.96	0.05	0.11	0.00	0.00	0.00
Min Fy	MC|ASCE(2.4.1.5)EX	19	16	5	-1.96	-0.05	-0.11	0.00	0.00	0.00
Max Fz	MC|ASCE(2.4.1.3)S	16	9	1	-6.76	0.00	0.58	0.00	0.00	0.00
Min Fz	MC|ASCE(2.4.1.3)S	16	16	5	-6.76	0.00	-0.58	0.00	0.00	0.00
Max Mx	MC|ASCE(2.4.1.1)D	15	9	1	-1.78	0.00	0.11	0.00	0.00	0.00
Min Mx	MC|ASCE(2.4.1.8)EY	28	16	5	-1.03	0.00	-0.07	0.00	0.00	0.00
Max My	MC|ASCE(2.4.1.3)S	16	9	3	-6.76	0.00	0.00	19.98	0.00	0.00
Min My	MC|ASCE(2.4.1.7)WY	26	16	3	3.09	0.00	0.00	-10.36	0.00	0.00
Max Mz	MC|ASCE(2.4.1.5)EX	19	12	3	-1.60	0.00	0.00	3.92	1.69	0.00
Min Mz	MC|ASCE(2.4.1.5)EX	19	16	3	-1.96	0.00	0.00	3.92	-1.69	0.00

Compactness: Slender

Slender Section Properties

Label	C. Num	Axis	P (K)	Mprime (K-in)	M orth (K-in)	Atrans (in^2)	Itrans (in^4)	StransB (in^3)	StransT (in^4)	Qa	Fa (ksi)
Max Mz	19	z	-1.60	1.69	3.92	2.06	5.11	2.78	2.37	0.92	24.05
Min Mz	19	z	-1.96	1.69	3.92	2.06	5.11	2.78	2.37	0.92	24.05

Member Design Results

Label	C. Name	fa	Fa	fby	Fby	fbz	Fbz	F'ey	F'ez	Stress Ratio	Allow Increa	ASD OK
Max Fx	MC|ASCE(2.4.1.7)WY	1.45	21.14	0.00	27.60	0.00	27.60	588.52	317.51	0.07	0.00	True
Min Fx	MC|ASCE(2.4.1.3)S	3.03	27.60	0.00	27.60	0.00	27.60	588.52	317.51	0.11	0.00	True
Max Fy	MC|ASCE(2.4.1.5)EY	0.88	27.60	0.00	27.60	0.00	27.60	588.52	317.51	0.03	0.00	True
Min Fy	MC|ASCE(2.4.1.5)EX	0.88	27.60	0.00	27.60	0.00	27.60	588.52	317.51	0.03	0.00	True
Max Fz	MC|ASCE(2.4.1.3)S	3.03	27.60	0.00	27.60	0.00	27.60	588.52	317.51	0.11	0.00	True
Min Fz	MC|ASCE(2.4.1.3)S	3.03	27.60	0.00	27.60	0.00	27.60	588.52	317.51	0.11	0.00	True
Max Mx	MC|ASCE(2.4.1.1)D	0.80	27.60	0.00	27.60	0.00	27.60	588.52	317.51	0.03	0.00	True
Min Mx	MC|ASCE(2.4.1.8)EY	0.46	27.60	0.00	27.60	0.00	27.60	588.52	317.51	0.02	0.00	True
Max My	MC|ASCE(2.4.1.3)S	3.03	27.60	5.24	27.60	0.00	27.60	588.52	317.51	0.30	0.00	True
Min My	MC|ASCE(2.4.1.7)WY	1.38	21.14	2.72	27.60	0.00	27.60	588.52	317.51	0.16	0.00	True
Max Mz	MC|ASCE(2.4.1.5)EX	0.72	24.05	1.03	27.60	0.71	27.60	588.52	317.51	0.09	0.00	True
Min Mz	MC|ASCE(2.4.1.5)EX	0.88	24.05	1.03	27.60	0.71	27.60	588.52	317.51	0.10	0.00	True

TB1 I end - End Plate Connection

END PLATE								
	Depth of Cut (in)	6.00	Length (in)	6.00	Bolt Count	2	Weld Size	0.13
	Width of cut (in)	4.33	Width (in)	4.50	Bolt Size (in)	0.63	Weld	Square
			Thick (in)	0.63	Vert. Spread(in)	0.00		
			Angle (deg)	90.00	Hor. Spread(in)	3.75		
			Fu	58.00	Flange	0.00		
			Fy	36.00				

Design Envelope

Label	C. Name	C. Num	Rbt. Bar Num.	Location	Fx (K)	Fy (K)	Fz (K)	My (K-in)	Mz (K-in)	Allow. Increase
Max Fx	MC|ASCE(2.4.1.7)WY	26	9	1	3.24	0.00	-0.30	0.00	0.00	0.00
Min Fx	MC|ASCE(2.4.1.3)S	16	16	1	-6.76	0.00	0.58	0.00	0.00	0.00
Max Fy	MC|ASCE(2.4.1.5)EY	20	10	1	-1.96	0.05	0.11	0.00	0.00	0.00
Min Fy	MC|ASCE(2.4.1.5)EY	20	14	1	-1.60	-0.05	0.11	0.00	0.00	0.00
Max Fz	MC|ASCE(2.4.1.3)S	16	9	1	-6.76	0.00	0.58	0.00	0.00	0.00
Min Fz	MC|ASCE(2.4.1.7)WY	26	16	1	3.09	0.00	-0.30	0.00	0.00	0.00
Max Mx	MC|ASCE(2.4.1.1)D	15	9	1	-1.78	0.00	0.11	0.00	0.00	0.00
Min Mx	MC|ASCE(2.4.1.8)EY	28	16	1	-1.10	0.00	0.07	0.00	0.00	0.00
Max My	MC|ASCE(2.4.1.1)D	15	9	1	-1.78	0.00	0.11	0.00	0.00	0.00
Min My	MC|ASCE(2.4.1.8)EY	28	16	1	-1.10	0.00	0.07	0.00	0.00	0.00
Max Mz	MC|ASCE(2.4.1.1)D	15	9	1	-1.78	0.00	0.11	0.00	0.00	0.00
Min Mz	MC|ASCE(2.4.1.8)EY	28	16	1	-1.10	0.00	0.07	0.00	0.00	0.00

End Plate Connection Results

Label	C. Num	Fh	Fv	My	Tu(K) Bolt Weld	Vu(K) Bolt Weld	Tn(K) Bolt Weld	Vn(K) Bolt Weld	Req. Size(in) Bolt Weld	Mu(K-in) Plate	Rqd. T(in) Plate Flange	Act. T(in) Plate Flange	Che
Max Fx	26	3.00	1.28	0.00	-2.44	2.08	43.78	21.00	0.20	-0.03	0.00	0.63	True
					1.26	0.49	21.00	21.00	0.00		0.00	0.00	
Min Fx	16	-6.25	2.65	0.00	5.09	4.32	43.06	21.00	0.28	0.06	0.12	0.63	True
					2.63	1.03	21.00	21.00	0.01		0.00	0.00	
Max Fy	20	-1.83	0.71	0.00	1.49	1.17	43.93	21.00	0.15	0.02	0.06	0.63	True
					0.76	0.28	21.00	21.00	0.00		0.00	0.00	
Min Fy	20	-1.46	0.67	0.00	1.19	1.08	43.94	21.00	0.14	0.01	0.06	0.63	True
					0.62	0.26	21.00	21.00	0.00		0.00	0.00	
Max Fz	16	-6.25	2.65	0.00	5.09	4.32	43.06	21.00	0.28	0.06	0.12	0.63	True
					2.63	1.03	21.00	21.00	0.01		0.00	0.00	
Min Fz	26	2.85	1.22	0.00	-2.32	1.99	43.80	21.00	0.19	-0.03	0.00	0.63	True
					1.20	0.47	21.00	21.00	0.00		0.00	0.00	
Max Mx	15	-1.64	0.69	0.00	1.34	1.12	43.94	21.00	0.14	0.02	0.06	0.63	True
					0.69	0.27	21.00	21.00	0.00		0.00	0.00	
Min Mx	28	-1.02	0.43	0.00	0.83	0.70	43.98	21.00	0.11	0.01	0.05	0.63	True
					0.43	0.17	21.00	21.00	0.00		0.00	0.00	
Max My	15	-1.64	0.69	0.00	1.34	1.12	43.94	21.00	0.14	0.02	0.06	0.63	True
					0.69	0.27	21.00	21.00	0.00		0.00	0.00	
Min My	28	-1.02	0.43	0.00	0.83	0.70	43.98	21.00	0.11	0.01	0.05	0.63	True
					0.43	0.17	21.00	21.00	0.00		0.00	0.00	
Max Mz	15	-1.64	0.69	0.00	1.34	1.12	43.94	21.00	0.14	0.02	0.06	0.63	True
					0.69	0.27	21.00	21.00	0.00		0.00	0.00	
Min Mz	28	-1.02	0.43	0.00	0.83	0.70	43.98	21.00	0.11	0.01	0.05	0.63	True
					0.43	0.17	21.00	21.00	0.00		0.00	0.00	

TB1 J end - End Plate Connection

END PLATE								
	Depth of Cut (in)	6.00	Length (in)	6.00	Bolt Count	2	Weld Size	0.13
	Width of cut (in)	4.33	Width (in)	4.50	Bolt Size (in)	0.63	Weld	Square
			Thick (in)	0.63	Vert. Spread(in)	0.00		
			Angle (deg)	90.00	Hor. Spread(in)	3.75		
			Fu	58.00	Flange	0.00		
			Fy	36.00				

Design Envelope

Label	C. Name	C. Num	Rbt. Bar Num.	Location	Fx (K)	Fy (K)	Fz (K)	My (K-in)	Mz (K-in)	Allow. Increase
Max Fx	MC|ASCE(2.4.1.7)WY	26	9	5	3.24	0.00	0.30	0.00	0.00	0.00
Min Fx	MC|ASCE(2.4.1.3)S	16	16	5	-6.76	0.00	-0.58	0.00	0.00	0.00
Max Fy	MC|ASCE(2.4.1.5)EX	19	12	5	-1.60	0.05	-0.11	0.00	0.00	0.00
Min Fy	MC|ASCE(2.4.1.5)EX	19	16	5	-1.96	-0.05	-0.11	0.00	0.00	0.00
Max Fz	MC|ASCE(2.4.1.7)WX	25	9	5	2.77	0.00	0.30	0.00	0.00	0.00
Min Fz	MC|ASCE(2.4.1.3)S	16	16	5	-6.76	0.00	-0.58	0.00	0.00	0.00
Max Mx	MC|ASCE(2.4.1.1)D	15	9	5	-1.78	0.00	-0.11	0.00	0.00	0.00
Min Mx	MC|ASCE(2.4.1.8)EY	28	16	5	-1.03	0.00	-0.07	0.00	0.00	0.00
Max My	MC|ASCE(2.4.1.1)D	15	9	5	-1.78	0.00	-0.11	0.00	0.00	0.00
Min My	MC|ASCE(2.4.1.8)EY	28	16	5	-1.03	0.00	-0.07	0.00	0.00	0.00
Max Mz	MC|ASCE(2.4.1.1)D	15	9	5	-1.78	0.00	-0.11	0.00	0.00	0.00
Min Mz	MC|ASCE(2.4.1.8)EY	28	16	5	-1.03	0.00	-0.07	0.00	0.00	0.00

End Plate Connection Results

Label	C. Num	Fh	Fv	My	Tu(K) Bolt Weld	Vu(K) Bolt Weld	Tn(K) Bolt Weld	Vn(K) Bolt Weld	Req. Size(in) Bolt Weld	Mu(K-in) Plate	Rqd. T(in) Plate Flange	Act. T(in) Plate Flange	Che
Max Fx	26	3.00	1.28	0.00	-2.44	2.08	43.78	21.00	0.20	-0.03	0.00	0.63	True
					1.26	0.49	21.00	21.00	0.00		0.00	0.00	
Min Fx	16	-6.25	2.65	0.00	5.09	4.32	43.06	21.00	0.28	0.06	0.12	0.63	True
					2.63	1.03	21.00	21.00	0.01		0.00	0.00	
Max Fy	19	-1.46	0.67	0.00	1.19	1.08	43.94	21.00	0.14	0.01	0.06	0.63	True
					0.62	0.26	21.00	21.00	0.00		0.00	0.00	
Min Fy	19	-1.83	0.71	0.00	1.49	1.17	43.93	21.00	0.15	0.02	0.06	0.63	True
					0.76	0.28	21.00	21.00	0.00		0.00	0.00	
Max Fz	25	2.56	1.10	0.00	-2.09	1.80	43.84	21.00	0.18	-0.02	0.00	0.63	True
					1.08	0.43	21.00	21.00	0.00		0.00	0.00	
Min Fz	16	-6.25	2.65	0.00	5.09	4.32	43.06	21.00	0.28	0.06	0.12	0.63	True
					2.63	1.03	21.00	21.00	0.01		0.00	0.00	
Max Mx	15	-1.64	0.69	0.00	1.34	1.12	43.94	21.00	0.14	0.02	0.06	0.63	True
					0.69	0.27	21.00	21.00	0.00		0.00	0.00	
Min Mx	28	-0.95	0.40	0.00	0.78	0.65	43.98	21.00	0.11	0.01	0.05	0.63	True
					0.40	0.16	21.00	21.00	0.00		0.00	0.00	
Max My	15	-1.64	0.69	0.00	1.34	1.12	43.94	21.00	0.14	0.02	0.06	0.63	True
					0.69	0.27	21.00	21.00	0.00		0.00	0.00	
Min My	28	-0.95	0.40	0.00	0.78	0.65	43.98	21.00	0.11	0.01	0.05	0.63	True
					0.40	0.16	21.00	21.00	0.00		0.00	0.00	
Max Mz	15	-1.64	0.69	0.00	1.34	1.12	43.94	21.00	0.14	0.02	0.06	0.63	True
					0.69	0.27	21.00	21.00	0.00		0.00	0.00	
Min Mz	28	-0.95	0.40	0.00	0.78	0.65	43.98	21.00	0.11	0.01	0.05	0.63	True
					0.40	0.16	21.00	21.00	0.00		0.00	0.00	

TB2 Tie Beam

Title:	TB2
Count:	8
Horizontal Angle Start end:	22.50
Horizontal Angle Finish end:	-22.50
Vertical Angle Start end:	0.00
Vertical Angle Finish end:	0.00
Ky	1.00
Kz	1.00
L(ft)	5.36
Ly(ft)	3.00
Lz(ft)	3.00

Section Properties

Name	HSS4X4X0.125
Depth (in)	4.00
Width (in)	4.00
Nominal Thickness (in)	0.13
Design Thickness (in)	0.12
Area (in^2)	1.77
MOI Strong (in^4)	4.40
MOI weak (in^4)	4.40
Section Mod. Strong (in^3)	2.20
Section Mod. Weak (in^3)	2.20
Fy (ksi)	46

Design Envelope

Label	C. Name	C. Num	Rbt. Num.	Bar	Location	Fx (K)	Fy (K)	Fz (K)	My (K-in)	Mz (K-in)	Allow. Increase
Max Fx	MC|ASCE(2.4.1.7)WY	26	42	1	0.14	0.00	-0.11	1.42	0.17	0.00	
Min Fx	MC|ASCE(2.4.1.5)WY	18	46	5	-0.15	0.00	0.09	1.06	0.08	0.00	
Max Fy	MC|ASCE(2.4.1.5)WY	18	43	1	0.10	0.02	-0.15	3.06	0.68	0.00	
Min Fy	MC|ASCE(2.4.1.7)WY	26	41	5	0.10	-0.02	0.17	3.27	0.68	0.00	
Max Fz	MC|ASCE(2.4.1.3)S	16	41	1	0.04	0.00	0.21	-2.54	0.00	0.00	
Min Fz	MC|ASCE(2.4.1.3)S	16	48	5	0.04	0.00	-0.21	-2.54	0.00	0.00	
Max Mx	MC|ASCE(2.4.1.5)WX	17	45	1	0.10	0.02	-0.15	3.05	0.68	0.00	
Min Mx	MC|ASCE(2.4.1.7)WX	25	43	5	0.10	-0.02	0.17	3.26	0.68	0.00	
Max My	MC|ASCE(2.4.1.7)WY	26	41	5	0.10	-0.02	0.17	3.27	0.68	0.00	
Min My	MC|ASCE(2.4.1.6)EY	24	48	5	0.03	0.00	-0.19	-2.71	0.04	0.00	
Max Mz	MC|ASCE(2.4.1.5)WY	18	41	5	0.10	-0.02	0.15	3.06	0.68	0.00	
Min Mz	MC|ASCE(2.4.1.7)WY	26	43	5	0.10	0.02	0.05	-0.67	-0.71	0.00	

Compactness: NonCompact

Member Design Results

Label	C. Name	fa	Fa	fby	Fby	fbz	Fbz	F'ey	F'ez	Stress Ratio	Allow Increa	ASD OK
Max Fx	MC|ASCE(2.4.1.7)WY	0.08	23.89	0.64	27.60	0.08	27.60	287.65	287.65	0.03	0.00	True
Min Fx	MC|ASCE(2.4.1.5)WY	0.08	27.60	0.48	27.60	0.04	27.60	287.65	287.65	0.02	0.00	True
Max Fy	MC|ASCE(2.4.1.5)WY	0.06	23.89	1.39	27.60	0.31	27.60	287.65	287.65	0.06	0.00	True
Min Fy	MC|ASCE(2.4.1.7)WY	0.06	23.89	1.48	27.60	0.31	27.60	287.65	287.65	0.07	0.00	True
Max Fz	MC|ASCE(2.4.1.3)S	0.02	23.89	1.15	27.60	0.00	27.60	287.65	287.65	0.04	0.00	True
Min Fz	MC|ASCE(2.4.1.3)S	0.02	23.89	1.15	27.60	0.00	27.60	287.65	287.65	0.04	0.00	True
Max Mx	MC|ASCE(2.4.1.5)WX	0.06	23.89	1.39	27.60	0.31	27.60	287.65	287.65	0.06	0.00	True
Min Mx	MC|ASCE(2.4.1.7)WX	0.06	23.89	1.48	27.60	0.31	27.60	287.65	287.65	0.07	0.00	True
Max My	MC|ASCE(2.4.1.7)WY	0.06	23.89	1.48	27.60	0.31	27.60	287.65	287.65	0.07	0.00	True
Min My	MC|ASCE(2.4.1.6)EY	0.02	23.89	1.23	27.60	0.02	27.60	287.65	287.65	0.05	0.00	True
Max Mz	MC|ASCE(2.4.1.5)WY	0.06	23.89	1.39	27.60	0.31	27.60	287.65	287.65	0.06	0.00	True
Min Mz	MC|ASCE(2.4.1.7)WY	0.06	23.89	0.31	27.60	0.32	27.60	287.65	287.65	0.03	0.00	True

TB2 I end - End Plate Connection

END PLATE								
	Depth of Cut (in)	4.00	Length (in)	4.00	Bolt Count	2	Weld Size	0.13
	Width of cut (in)	4.33	Width (in)	4.50	Bolt Size (in)	0.63	Weld	Square
			Thick (in)	0.63	Vert. Spread(in)	0.00		
			Angle (deg)	90.00	Hor. Spread(in)	1.75		
			Fu	58.00	Flange	0.00		
			Fy	36.00				

Design Envelope

Label	C. Name	C. Num	Rbt. Num.	Bar	Location	Fx (K)	Fy (K)	Fz (K)	My (K-in)	Mz (K-in)	Allow. Increase
Max Fx	MC|ASCE(2.4.1.7)WY	26	42	1	0.14	0.00	-0.11	1.42	0.17	0.00
Min Fx	MC|ASCE(2.4.1.5)WY	18	46	1	-0.15	0.00	-0.09	1.06	0.08	0.00
Max Fy	MC|ASCE(2.4.1.5)WY	18	43	1	0.10	0.02	-0.15	3.06	0.68	0.00
Min Fy	MC|ASCE(2.4.1.7)WY	26	41	1	0.10	-0.02	-0.05	-0.67	-0.71	0.00
Max Fz	MC|ASCE(2.4.1.3)S	16	41	1	0.04	0.00	0.21	-2.54	0.00	0.00
Min Fz	MC|ASCE(2.4.1.7)WY	26	43	1	0.10	0.02	-0.17	3.27	0.68	0.00
Max Mx	MC|ASCE(2.4.1.5)WX	17	45	1	0.10	0.02	-0.15	3.05	0.68	0.00
Min Mx	MC|ASCE(2.4.1.7)WX	25	43	1	0.10	-0.02	-0.05	-0.67	-0.71	0.00
Max My	MC|ASCE(2.4.1.7)WY	26	43	1	0.10	0.02	-0.17	3.27	0.68	0.00
Min My	MC|ASCE(2.4.1.6)EY	24	44	1	0.03	0.00	0.19	-2.71	0.04	0.00
Max Mz	MC|ASCE(2.4.1.5)WY	18	43	1	0.10	0.02	-0.15	3.06	0.68	0.00
Min Mz	MC|ASCE(2.4.1.7)WY	26	41	1	0.10	-0.02	-0.05	-0.67	-0.71	0.00

End Plate Connection Results

Label	C. Num	Fh	Fv	My	Tu(K) Bolt / Weld	Vu(K) Bolt / Weld	Tn(K) Bolt / Weld	Vn(K) Bolt / Weld	Req. Size(in) Bolt / Weld	Mu(K-in) Plate	Rqd. T(in) Plate / Flange	Act. T(in) Plate / Flange	Che
Max Fx	26	0.13	0.12	1.42	1.50	0.20	44.00	21.00	0.12	0.02	0.06	0.63	True
					0.50	0.06	21.00	21.00	0.00		0.00	0.00	
Min Fx	18	-0.14	0.11	1.06	1.28	0.18	44.00	21.00	0.11	0.02	0.06	0.63	True
					0.47	0.05	21.00	21.00	0.00		0.00	0.00	
Max Fy	18	0.08	0.16	3.06	3.63	0.27	44.00	21.00	0.18	0.04	0.10	0.63	True
					1.27	0.08	21.00	21.00	0.01		0.00	0.00	
Min Fy	26	0.10	0.05	-0.67	1.14	0.08	44.00	21.00	0.10	0.01	0.05	0.63	True
					0.43	0.02	21.00	21.00	0.00		0.00	0.00	
Max Fz	16	0.03	0.21	-2.54	2.63	0.34	43.99	21.00	0.15	0.03	0.08	0.63	True
					0.89	0.10	21.00	21.00	0.01		0.00	0.00	
Min Fz	26	0.08	0.18	3.27	3.85	0.29	44.00	21.00	0.18	0.05	0.10	0.63	True
					1.35	0.09	21.00	21.00	0.01		0.00	0.00	
Max Mx	17	0.08	0.16	3.05	3.63	0.27	44.00	21.00	0.18	0.04	0.10	0.63	True
					1.27	0.08	21.00	21.00	0.01		0.00	0.00	
Min Mx	25	0.10	0.05	-0.67	1.14	0.08	44.00	21.00	0.10	0.01	0.05	0.63	True
					0.43	0.02	21.00	21.00	0.00		0.00	0.00	
Max My	26	0.08	0.18	3.27	3.85	0.29	44.00	21.00	0.18	0.05	0.10	0.63	True
					1.35	0.09	21.00	21.00	0.01		0.00	0.00	
Min My	24	0.03	0.19	-2.71	2.84	0.31	44.00	21.00	0.16	0.03	0.09	0.63	True
					0.96	0.09	21.00	21.00	0.01		0.00	0.00	
Max Mz	18	0.08	0.16	3.06	3.63	0.27	44.00	21.00	0.18	0.04	0.10	0.63	True
					1.27	0.08	21.00	21.00	0.01		0.00	0.00	
Min Mz	26	0.10	0.05	-0.67	1.14	0.08	44.00	21.00	0.10	0.01	0.05	0.63	True
					0.43	0.02	21.00	21.00	0.00		0.00	0.00	

TB2 J end - End Plate Connection

END PLATE								
	Depth of Cut (in)	4.00	Length (in)	4.00	Bolt Count	2	Weld Size	0.13
	Width of cut (in)	4.33	Width (in)	4.50	Bolt Size (in)	0.63	Weld	Square
			Thick (in)	0.63	Vert. Spread(in)	0.00		
			Angle (deg)	90.00	Hor. Spread(in)	1.75		
			Fu	58.00	Flange	0.00		
			Fy	36.00				

Design Envelope

Label	C. Name	C. Num	Rbt. Bar Num.	Location	Fx (K)	Fy (K)	Fz (K)	My (K-in)	Mz (K-in)	Allow. Increase
Max Fx	MC|ASCE(2.4.1.7)WY	26	42	5	0.14	0.00	0.11	1.42	0.17	0.00
Min Fx	MC|ASCE(2.4.1.5)WY	18	46	5	-0.15	0.00	0.09	1.06	0.08	0.00
Max Fy	MC|ASCE(2.4.1.5)WY	18	43	5	0.10	0.02	0.03	-0.88	-0.71	0.00
Min Fy	MC|ASCE(2.4.1.7)WY	26	41	5	0.10	-0.02	0.17	3.27	0.68	0.00
Max Fz	MC|ASCE(2.4.1.7)WY	26	41	5	0.10	-0.02	0.17	3.27	0.68	0.00
Min Fz	MC|ASCE(2.4.1.3)S	16	48	5	0.04	0.00	-0.21	-2.54	0.00	0.00
Max Mx	MC|ASCE(2.4.1.5)WX	17	45	5	0.10	0.02	0.03	-0.88	-0.71	0.00
Min Mx	MC|ASCE(2.4.1.7)WX	25	43	5	0.10	-0.02	0.17	3.26	0.68	0.00
Max My	MC|ASCE(2.4.1.7)WY	26	41	5	0.10	-0.02	0.17	3.27	0.68	0.00
Min My	MC|ASCE(2.4.1.6)EY	24	48	5	0.03	0.00	-0.19	-2.71	0.04	0.00
Max Mz	MC|ASCE(2.4.1.5)WY	18	41	5	0.10	-0.02	0.15	3.06	0.68	0.00
Min Mz	MC|ASCE(2.4.1.7)WY	26	43	5	0.10	0.02	0.05	-0.67	-0.71	0.00

End Plate Connection Results

Label	C. Num	Fh	Fv	My	Tu(K) Bolt / Weld	Vu(K) Bolt / Weld	Tn(K) Bolt / Weld	Vn(K) Bolt / Weld	Req. Size(in) Bolt / Weld	Mu(K-in) Plate	Rqd. T(in) Plate / Flange	Act. T(in) Plate / Flange	Chec
Max Fz	26	0.08	0.18	3.27	3.85	0.29	44.00	21.00	0.18	0.05	0.10	0.63	True
					1.35	0.09	21.00	21.00	0.01		0.00	0.00	
Min Fz	16	0.03	0.21	-2.54	2.63	0.34	43.99	21.00	0.15	0.03	0.08	0.63	True
					0.89	0.10	21.00	21.00	0.01		0.00	0.00	
Max Mx	17	0.10	0.04	-0.88	1.36	0.06	44.00	21.00	0.11	0.02	0.06	0.63	True
					0.50	0.02	21.00	21.00	0.00		0.00	0.00	
Min Mx	25	0.08	0.18	3.26	3.85	0.29	44.00	21.00	0.18	0.05	0.10	0.63	True
					1.35	0.09	21.00	21.00	0.01		0.00	0.00	
Max My	26	0.08	0.18	3.27	3.85	0.29	44.00	21.00	0.18	0.05	0.10	0.63	True
					1.35	0.09	21.00	21.00	0.01		0.00	0.00	
Min My	24	0.03	0.19	-2.71	2.84	0.31	44.00	21.00	0.16	0.03	0.09	0.63	True
					0.96	0.09	21.00	21.00	0.01		0.00	0.00	
Max Mz	18	0.08	0.16	3.06	3.63	0.27	44.00	21.00	0.18	0.04	0.10	0.63	True
					1.27	0.08	21.00	21.00	0.01		0.00	0.00	
Min Mz	26	0.10	0.05	-0.67	1.14	0.08	44.00	21.00	0.10	0.01	0.05	0.63	True
					0.43	0.02	21.00	21.00	0.00		0.00	0.00	
Max Fx	26	0.13	0.12	1.42	1.50	0.20	44.00	21.00	0.12	0.02	0.06	0.63	True
					0.50	0.06	21.00	21.00	0.00		0.00	0.00	
Min Fx	18	-0.14	0.11	1.06	1.28	0.18	44.00	21.00	0.11	0.02	0.06	0.63	True
					0.47	0.05	21.00	21.00	0.00		0.00	0.00	
Max Fy	18	0.10	0.04	-0.88	1.36	0.06	44.00	21.00	0.11	0.02	0.06	0.63	True
					0.50	0.02	21.00	21.00	0.00		0.00	0.00	
Min Fy	26	0.08	0.18	3.27	3.85	0.29	44.00	21.00	0.18	0.05	0.10	0.63	True
					1.35	0.09	21.00	21.00	0.01		0.00	0.00	

McElroy Metal, Inc.

Multi-Rib

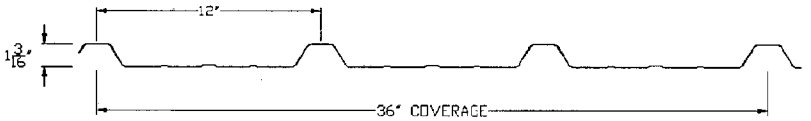

SECTION PROPERTIES						TOP IN COMPRESSION			BOTTOM IN COMPRESSION		
GAUGE	FY (KSI)	WEIGHT (PSF)	V_a kip/ft.	P_{a_end} lbs/ft.	P_{a_int} lbs/ft.	I_x (in.^{4}/ft.)	S_e (in.^{3}/ft.)	M_a kip-in./ft.	I_x (in.^{4}/ft.)	S_e (in.^{3}/ft.)	M_a kip-in./ft.
24	50.0	1.14	0.9053	223.34	377.49	0.0523	0.0576	1.7233	0.0327	0.0543	1.6267

1. Section properties are calculated in accordance with the 2001 AISI North American Specification for the Design of Cold-Formed Steel Structural Members.
2. Va is the allowable shear.
3. Pa is the allowable load for web crippling on end & interior supports.
4. Ix is for deflection determination.
5. Se is for bending.
6. Ma is the allowable bending moment.
7. All values are for one foot of panel width.

Allowable Uniform Loads (PSF)

		Span in Feet															
Span Type	Load Type	1.50	2.00	2.50	3.00	3.50	4.00	4.50	5.00	5.50	6.00	6.50	7.00	7.50	8.00	8.50	9.00
Single	Positive Wind	510	287	183	127	93	71	56	45	37	31	27	23	20	17	15	14
	Negative Wind	481	271	173	120	88	67	53	43	35	30	25	22	19	16	15	13
	Live	510	287	183	127	93	71	56	45	37	31	27	23	20	17	15	14
	Deflection (L/180)	1354	571	292	169	106	71	50	36	27	21	16	13	10	8	7	6
	Deflection (L/240)	1015	428	219	126	79	53	37	27	20	15	12	9	8	6	5	4
2 Span	Positive Wind	431	253	166	116	86	66	52	42	35	29	25	22	19	16	14	13
	Negative Wind	451	266	175	123	91	70	55	45	37	31	26	23	20	17	15	14
	Live	431	253	166	116	86	66	52	42	35	29	25	22	19	16	14	13
	Deflection (L/180)	2651	1118	572	331	208	139	98	71	53	41	32	26	21	17	14	12
	Deflection (L/240)	1988	838	429	248	156	104	73	53	40	31	24	19	15	13	10	9
3 Span	Positive Wind	516	309	204	144	107	82	65	53	44	37	31	27	23	21	18	16
	Negative Wind	538	324	214	152	113	87	69	56	46	39	33	29	25	22	19	17
	Live	516	309	204	144	107	82	65	53	44	37	31	27	23	21	18	16
	Deflection (L/180)	2077	876	448	259	163	109	76	56	42	32	25	20	16	13	11	9
	Deflection (L/240)	1557	657	336	194	122	82	57	42	31	24	19	15	12	10	8	7
4 Span	Positive Wind	489	291	191	135	100	77	61	49	41	34	29	25	22	19	17	15
	Negative Wind	510	305	201	142	105	81	64	52	43	36	31	27	23	20	18	16
	Live	489	291	191	135	100	77	61	49	41	34	29	25	22	19	17	15
	Deflection (L/180)	2204	930	476	275	173	116	81	59	44	34	27	21	17	14	12	10
	Deflection (L/240)	1653	697	357	206	130	87	61	44	33	25	20	16	13	10	9	7

Notes:
1. Allowable uniform loads are based upon equal span lengths.
2. Positive Wind is wind pressure and is **NOT** increased by 33 1/3 %.
3. Negative Wind is wind suction or uplift and is **NOT** increased by 33 1/3%.
4. Live is the allowable live or snow load.
5. Deflection (L/180) is the allowable load that limits the panel's deflection to L/180 while under positive or live load.
6. Deflection (L/240) is the allowable load that limits the panel's deflection to L/240 while under positive or live load.
7. The weight of the panel has **NOT** been deducted from the allowable loads.
8. Positive Wind, Negative Wind, and Live Load values are limited to combined shear & bending using Eq. C3.3.1-1 of the AISI Specification.
9. Positive Wind and Live Load values are limited by web crippling using a bearing length of 2".
10. Web crippling values are determined using a ratio of the uniform load **actually** supported by the top flanges of the section.

STRUCTURE

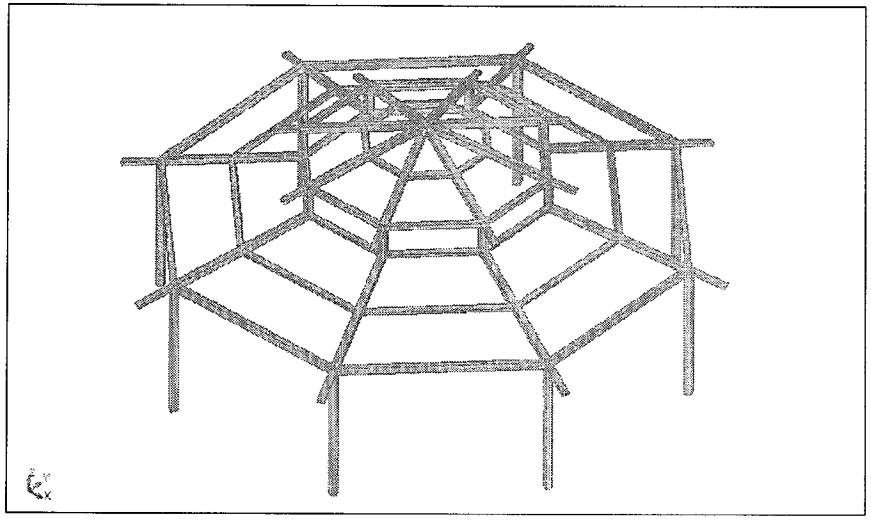

NODES

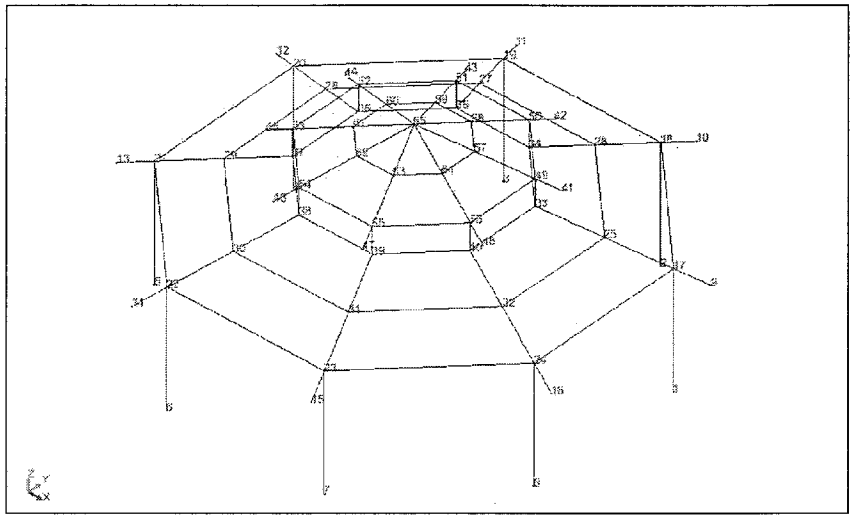

Nodes

Node	X (ft)	Y (ft)	Z (ft)	Support code	Support
1	13.86	5.74	0.0	xxxxxx	Fixed
2	5.74	13.86	0.0	xxxxxx	Fixed
3	-5.74	13.86	0.0	xxxxxx	Fixed
4	-13.86	5.74	0.0	xxxxxx	Fixed
5	-13.86	-5.74	0.0	xxxxxx	Fixed
6	-5.74	-13.86	0.0	xxxxxx	Fixed
7	5.74	-13.86	0.0	xxxxxx	Fixed
8	13.86	-5.74	0.0	xxxxxx	Fixed
9	15.86	6.57	8.33		
10	6.57	15.86	8.33		
11	-6.57	15.86	8.33		
12	-15.86	6.57	8.33		
13	-15.86	-6.57	8.33		
14	-6.57	-15.86	8.33		
15	6.57	-15.86	8.33		
16	15.86	-6.57	8.33		
17	13.86	5.74	9.00		
18	5.74	13.86	9.00		
19	-5.74	13.86	9.00		
20	-13.86	5.74	9.00		
21	-13.86	-5.74	9.00		
22	-5.74	-13.86	9.00		
23	5.74	-13.86	9.00		
24	13.86	-5.74	9.00		
25	10.16	4.21	10.23		
26	4.21	10.16	10.23		
27	-4.21	10.16	10.23		
28	-10.16	4.21	10.23		
29	-10.16	-4.21	10.23		
30	-4.21	-10.16	10.23		
31	4.21	-10.16	10.23		
32	10.16	-4.21	10.23		
33	6.47	2.68	11.46		
34	2.68	6.47	11.46		

Node	X (ft)	Y (ft)	Z (ft)	Support code	Support
35	-2.68	6.47	11.46		
36	-6.47	2.68	11.46		
37	-6.47	-2.68	11.46		
38	-2.68	-6.47	11.46		
39	2.68	-6.47	11.46		
40	6.47	-2.68	11.46		
41	7.89	3.27	12.99		
42	3.27	7.89	12.99		
43	-3.27	7.89	12.99		
44	-7.89	3.27	12.99		
45	-7.89	-3.27	12.99		
46	-3.27	-7.89	12.99		
47	3.27	-7.89	12.99		
48	7.89	-3.27	12.99		
49	6.47	2.68	13.46		
50	2.68	6.47	13.46		
51	-2.68	6.47	13.46		
52	6.47	2.68	13.46		
53	-6.47	-2.68	13.46		
54	-2.68	-6.47	13.46		
55	2.68	-6.47	13.46		
56	6.47	-2.68	13.46		
57	3.23	1.34	14.54		
58	1.34	3.23	14.54		
59	-1.34	3.23	14.54		
60	-3.23	1.34	14.54		
61	-3.23	-1.34	14.54		
62	-1.34	-3.23	14.54		
63	1.34	-3.23	14.54		
64	3.23	-1.34	14.54		
65	0.0	0.0	15.62		

BARS

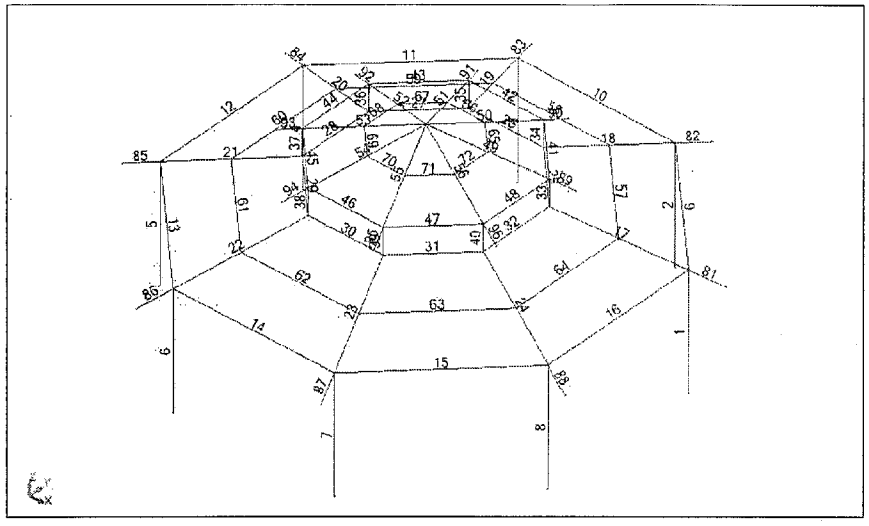

Bars

Bar	Node 1	Node 2	Section	Material	Length (ft)	Gamma (Deg)	Type
1	1	17	HSSQ 5x5	STEEL A500-	9.00	22.5000	Column
2	2	18	HSSQ 5x5	STEEL A500-	9.00	67.5000	Column
3	3	19	HSSQ 5x5	STEEL A500-	9.00	112.5000	Column
4	4	20	HSSQ 5x5	STEEL A500-	9.00	157.4999	Column
5	5	21	HSSQ 5x5	STEEL A500-	9.00	202.4999	Column
6	6	22	HSSQ 5x5	STEEL A500-	9.00	247.4999	Column
7	7	23	HSSQ 5x5	STEEL A500-	9.00	292.4999	Column
8	8	24	HSSQ 5x5	STEEL A500-	9.00	337.4999	Column
9	17	18	HSRE 6x4	STEEL	11.48	0.0	Beam
10	18	19	HSRE 6x4	STEEL	11.48	0.0	Beam
11	19	20	HSRE 6x4	STEEL	11.48	0.0	Beam
12	20	21	HSRE 6x4	STEEL	11.48	0.0	Beam
13	21	22	HSRE 6x4	STEEL	11.48	0.0	Beam
14	22	23	HSRE 6x4	STEEL	11.48	0.0	Beam
15	23	24	HSRE 6x4	STEEL	11.48	0.0	Beam
16	24	17	HSRE 6x4	STEEL	11.48	0.0	Beam
17	17	33	HSSQ 5x5	STEEL	8.37	0.0	Beam
18	18	34	HSSQ 5x5	STEEL	8.37	0.0	Beam
19	19	35	HSSQ 5x5	STEEL	8.37	0.0	Beam
20	20	36	HSSQ 5x5	STEEL	8.37	0.0	Beam
21	21	37	HSSQ 5x5	STEEL	8.37	0.0	Beam
22	22	38	HSSQ 5x5	STEEL	8.37	0.0	Beam
23	23	39	HSSQ 5x5	STEEL	8.37	0.0	Beam
24	24	40	HSSQ 5x5	STEEL	8.37	0.0	Beam
25	33	34	HSSQ 4x4	STEEL	5.38	18.4349	Simple bar
26	34	35	HSSQ 4x4	STEEL	5.38	18.4349	Simple bar
27	35	36	HSSQ 4x4	STEEL	5.38	18.4349	Simple bar
28	36	37	HSSQ 4x4	STEEL	5.38	18.4349	Simple bar
29	37	38	HSSQ 4x4	STEEL	5.38	18.4349	Simple bar
30	38	39	HSSQ 4x4	STEEL	5.38	18.4349	Simple bar
31	39	40	HSSQ 4x4	STEEL	5.38	18.4349	Simple bar
32	40	33	HSSQ 4x4	STEEL	5.38	18.4349	Simple bar
33	33	49	HSSQ 5x5	STEEL A500-	2.00	22.5000	Column
34	34	50	HSSQ 5x5	STEEL A500-	2.00	67.5000	Column

Bar	Node 1	Node 2	Section	Material	Length (ft)	Gamma (Deg)	Type
35	35	51	HSSQ 5x5	STEEL A500-	2.00	112.5000	Column
36	36	52	HSSQ 5x5	STEEL A500-	2.00	157.4999	Column
37	37	53	HSSQ 5x5	STEEL A500-	2.00	202.4999	Column
38	38	54	HSSQ 5x5	STEEL A500-	2.00	247.4999	Column
39	39	55	HSSQ 5x5	STEEL A500-	2.00	292.4999	Column
40	40	56	HSSQ 5x5	STEEL A500-	2.00	337.4999	Column
41	49	50	HSSQ 4x4	STEEL	5.38	0.0	Beam
42	50	51	HSSQ 4x4	STEEL	5.38	0.0	Beam
43	51	52	HSSQ 4x4	STEEL	5.38	0.0	Beam
44	52	53	HSSQ 4x4	STEEL	5.38	0.0	Beam
45	53	54	HSSQ 4x4	STEEL	5.38	0.0	Beam
46	54	55	HSSQ 4x4	STEEL	5.38	0.0	Beam
47	55	56	HSSQ 4x4	STEEL	5.38	0.0	Beam
48	56	49	HSSQ 4x4	STEEL	5.38	0.0	Beam
49	49	65	HSSQ 5x5	STEEL	7.32	0.0	Beam
50	50	65	HSSQ 5x5	STEEL	7.32	0.0	Beam
51	51	65	HSSQ 5x5	STEEL	7.32	0.0	Beam
52	52	65	HSSQ 5x5	STEEL	7.32	0.0	Beam
53	53	65	HSSQ 5x5	STEEL	7.32	0.0	Beam
54	54	65	HSSQ 5x5	STEEL	7.32	0.0	Beam
55	55	65	HSSQ 5x5	STEEL	7.32	0.0	Beam
56	56	65	HSSQ 5x5	STEEL	7.32	0.0	Beam
57	25	26	HSSQ 4x4	STEEL	8.42	18.4349	Simple bar
58	26	27	HSSQ 4x4	STEEL	8.42	18.4349	Simple bar
59	27	28	HSSQ 4x4	STEEL	8.42	18.4349	Simple bar
60	28	29	HSSQ 4x4	STEEL	8.42	18.4349	Simple bar
61	29	30	HSSQ 4x4	STEEL	8.42	18.4349	Simple bar
62	30	31	HSSQ 4x4	STEEL	8.42	18.4349	Simple bar
63	31	32	HSSQ 4x4	STEEL	8.42	18.4349	Simple bar
64	32	25	HSSQ 4x4	STEEL	8.42	18.4349	Simple bar
65	57	58	HSSQ 4x4	STEEL	2.56	18.4349	Simple bar
66	58	59	HSSQ 4x4	STEEL	2.56	18.4349	Simple bar
67	59	60	HSSQ 4x4	STEEL	2.56	18.4349	Simple bar
68	60	61	HSSQ 4x4	STEEL	2.56	18.4349	Simple bar
69	61	62	HSSQ 4x4	STEEL	2.56	18.4349	Simple bar
70	62	63	HSSQ 4x4	STEEL	2.56	18.4349	Simple bar

Bar	Node 1	Node 2	Section	Material	Length (ft)	Gamma (Deg)	Type
71	63	64	HSSQ 4x4	STEEL	2.56	18.4349	Simple bar
72	64	57	HSSQ 4x4	STEEL	2.56	18.4349	Simple bar
81	17	9	HSRE 5x3	STEEL	2.27	90.0000	Beam
82	18	10	HSRE 5x3	STEEL	2.27	90.0000	Beam
83	19	11	HSRE 5x3	STEEL	2.27	90.0000	Beam
84	20	12	HSRE 5x3	STEEL	2.27	90.0000	Beam
85	21	13	HSRE 5x3	STEEL	2.27	90.0000	Beam
86	22	14	HSRE 5x3	STEEL	2.27	90.0000	Beam
87	23	15	HSRE 5x3	STEEL	2.27	90.0000	Beam
88	24	16	HSRE 5x3	STEEL	2.27	90.0000	Beam
89	49	41	HSRE 5x3	STEEL	1.61	90.0000	Beam
90	50	42	HSRE 5x3	STEEL	1.61	90.0000	Beam
91	51	43	HSRE 5x3	STEEL	1.61	90.0000	Beam
92	52	44	HSRE 5x3	STEEL	1.61	90.0000	Beam
93	53	45	HSRE 5x3	STEEL	1.61	90.0000	Beam
94	54	46	HSRE 5x3	STEEL	1.61	90.0000	Beam
95	55	47	HSRE 5x3	STEEL	1.61	90.0000	Beam
96	56	48	HSRE 5x3	STEEL	1.61	90.0000	Beam

Loads

Case	Load type	List	Load values
1	self-weight	1to72 81to96	PZ Negative Factor=1.000000000
2	bar force	81to88	FZ=1.65700(kip) X=0.50 relative
2	uniform load	9to16	PZ=4.06200(kip/ft)
2	uniform load	57to64	PZ=3.80800(kip/ft)
2	uniform load	25to32	PZ=1.52100(kip/ft)
2	bar force	89to96	FZ=0.93200(kip) X=0.50 relative
2	uniform load	41to48	PZ=3.14700(kip/ft)
2	uniform load	65to72	PZ=3.51900(kip/ft)
2	uniform load		PZ=1.30000(kip/ft)
3	uniform load		PZ=1.30000(kip/ft)
3	uniform load	65to72	PZ=3.51900(kip/ft)
3	uniform load	41to48	PZ=3.14700(kip/ft)
3	bar force	89to96	FZ=0.93200(kip) X=0.50 relative
3	uniform load	25to32	PZ=1.52100(kip/ft)
3	uniform load	57to64	PZ=3.80800(kip/ft)
3	uniform load	9to16	PZ=4.06200(kip/ft)
3	bar force	81to88	FZ=1.65700(kip) X=0.50 relative
4	uniform load		PZ=1.30000(kip/ft)
4	uniform load	65to72	PZ=3.51900(kip/ft)
4	uniform load	41to48	PZ=3.14700(kip/ft)
4	bar force	89to96	FZ=0.93200(kip) X=0.50 relative
4	uniform load	25to32	PZ=1.52100(kip/ft)
4	uniform load	57to64	PZ=3.80800(kip/ft)
4	uniform load	9to16	PZ=4.06200(kip/ft)
4	bar force	81to88	FZ=1.65700(kip) X=0.50 relative
5	nodal force		FX=0.12771(kip)
5	nodal force	62	FX=1.02083(kip)
5	nodal force	54	FX=1.89046(kip)
5	nodal force		FX=0.30833(kip)
5	nodal force	61	FX=2.46451(kip)
5	nodal force	53	FX=4.56398(kip)
5	nodal force		FX=0.30833(kip)
5	nodal force	60	FX=2.46451(kip)
5	nodal force	52	FX=4.56398(kip)

Case	Load type	List	Load values
5	nodal force		FX=0.12771(kip)
5	nodal force	59	FX=1.02083(kip)
5	nodal force	51	FX=1.89046(kip)
5	nodal force	19	FX=5.23458(kip)
5	nodal force	27	FX=3.66667(kip)
5	nodal force	35	FX=1.33333(kip)
5	nodal force	20	FX=12.63739(kip)
5	nodal force	28	FX=8.85212(kip)
5	nodal force	36	FX=3.21895(kip)
5	nodal force	21	FX=12.63739(kip)
5	nodal force	29	FX=8.85212(kip)
5	nodal force	37	FX=3.21895(kip)
5	nodal force	22	FX=5.23458(kip)
5	nodal force	30	FX=3.66667(kip)
5	nodal force	38	FX=1.33333(kip)
6	nodal force	49	FY=1.89046(kip)
6	nodal force	57	FY=1.02083(kip)
6	nodal force	65	FY=0.12771(kip)
6	nodal force	50	FY=4.56398(kip)
6	nodal force	58	FY=2.46451(kip)
6	nodal force		FY=0.30833(kip)
6	nodal force	51	FY=4.56398(kip)
6	nodal force	59	FY=2.46451(kip)
6	nodal force		FY=0.30833(kip)
6	nodal force	52	FY=1.89046(kip)
6	nodal force	60	FY=1.02083(kip)
6	nodal force		FY=0.12771(kip)
6	nodal force	36	FY=1.33333(kip)
6	nodal force	28	FY=3.66667(kip)
6	nodal force	20	FY=5.23458(kip)
6	nodal force	35	FY=3.21895(kip)
6	nodal force	27	FY=8.85212(kip)
6	nodal force	19	FY=12.63739(kip)
6	nodal force	34	FY=3.21895(kip)
6	nodal force	26	FY=8.85212(kip)
6	nodal force	18	FY=12.63739(kip)

Case	Load type	List	Load values
6	nodal force	33	FY=1.33333(kip)
6	nodal force	25	FY=3.66667(kip)
6	nodal force	17	FY=5.23458(kip)
7	uniform load		PY=1.30000(kip/ft)
7	uniform load	65to72	PY=3.51900(kip/ft)
7	uniform load	41to48	PY=3.14700(kip/ft)
7	bar force	89to96	FY=0.93200(kip) X=0.50 relative
7	uniform load	25to32	PY=1.52100(kip/ft)
7	uniform load	57to64	PY=3.80800(kip/ft)
7	uniform load	9to16	PY=4.06200(kip/ft)
7	bar force	81to88	FY=1.65700(kip) X=0.50 relative
8	bar force	81to88	FX=1.65700(kip) X=0.50 relative
8	uniform load	9to16	PX=4.06200(kip/ft)
8	uniform load	57to64	PX=3.80800(kip/ft)
8	uniform load	25to32	PX=1.52100(kip/ft)
8	bar force	89to96	FX=0.93200(kip) X=0.50 relative
8	uniform load	41to48	PX=3.14700(kip/ft)
8	uniform load	65to72	PX=3.51900(kip/ft)
8	uniform load		PX=1.30000(kip/ft)

reactions: values

In the coordinate system: global - Case(s): 1to33

Node/Case	FX (kip)	FY (kip)	FZ (kip)	MX (kip-in)	MY (kip-in)	MZ (kip-in)
1/ 1	-0.00002	-0.00001	0.48501	0.06893	-0.16840	-0.00000
1/ 2	0.27874	0.11546	-115.71968	-20.70546	49.98746	-0.00000
1/ 3	0.27874	0.11546	-115.71968	-20.70546	40.98746	-0.00000
1/ 4	0.27874	0.11546	-115.71968	-20.70546	49.98746	-0.00000
1/ 5	-10.98514	-0.00744	4.22363	0.80334	-1186.39559	0.00000
1/ 6	-0.34165	11.19128	-4.11379	-1208.65790	-36.89835	0.00000
1/ 7	-0.08065	-115.63903	9.74622	12482.39891	-8.71092	-19.88401
1/ 8	-115.80034	-0.08065	23.52945	8.71092	-12499.80875	8.23623
1/ 9 (C)	-0.00086	-0.00036	0.83217	0.13104	-0.31636	-0.00000
1/ 10 (C)	-0.00557	-0.00231	2.31439	0.41411	-0.99975	0.00000
1/ 11 (C)	-0.31844	0.00161	-1.70771	-0.30416	-34.07687	0.00000
1/ 12 (C)	-0.00563	0.33074	-1.95275	-35.85022	-0.29314	0.00000
1/ 13 (C)	-0.24318	-0.00017	0.04941	0.01829	-26.24960	0.01730
1/ 14 (C)	-0.00017	-0.24284	0.00047	26.21301	-0.01826	0.04176
1/ 15 (C)	-0.00086	-0.00036	0.83217	0.13104	-0.31636	-0.00000
1/ 16 (C)	-0.00544	-0.00267	3.14657	0.54515	-1.31811	0.00000
1/ 17 (C)	-0.31930	0.00125	-0.87554	-0.17312	-34.39323	0.00000
1/ 18 (C)	-0.00849	0.33038	-1.12057	-35.71918	-0.50951	0.00000
1/ 19 (C)	-0.24404	-0.00053	0.88159	0.14934	-26.56596	0.01730
1/ 20 (C)	-0.00103	0.24320	0.85264	26.34405	-0.33468	-0.04178
1/ 21 (C)	-0.24387	-0.00088	1.28719	0.21351	-26.62382	0.00000
1/ 22 (C)	-0.00926	0.24597	1.10341	-25.44604	-1.28603	0.00000
1/ 23 (C)	-0.13271	-0.00218	2.59391	0.45123	-14.84721	0.00908
1/ 24 (C)	-0.00513	-0.12958	2.57871	14.20346	-1.07578	-0.02192
1/ 25 (C)	-0.31886	0.00140	-1.70841	-0.22553	-34.26888	0.00000
1/ 26 (C)	-0.00815	0.33063	-1.45344	-35.77160	-0.48296	0.00000
1/ 27 (C)	-0.17074	-0.00033	0.53389	0.09143	-18.56454	0.01211
1/ 28 (C)	-0.00064	-0.17020	0.51363	18.42773	-0.20262	-0.02923
1/ 29 (C)	-0.00121	-0.00050	1.16504	0.18346	-0.44291	-0.00000
1/ 30 (C)	-0.00382	-0.00158	2.15581	0.36431	-0.87951	0.00000
1/ 31 (C)	-0.26471	-0.00284	3.33547	0.57650	-29.24073	0.00000
1/ 32 (C)	-0.01446	0.26047	3.13944	-27.86035	-2.21375	0.00000
1/ 33 (C)	-0.51333	0.00099	-0.57659	-0.12235	-55.40250	0.00000

Node/Case		FX (kip)	FY (kip)	FZ (kip)	MX (kip-in)	MY (kip-in)	MZ (kip-in)
1/	34 (C)	-0.01283	0.52760	-0.96859	-56.99605	-1.34854	0.00000
1/	35 (C)	-0.24533	-0.00105	1.51090	0.25837	-26.82918	0.01730
1/	36 (C)	-0.00232	-0.24373	1.48195	26.45308	-0.59788	-0.04176
1/	37 (C)	-0.51028	0.00225	-1.98338	-0.36871	-54.80771	0.00000
1/	38 (C)	-0.00978	0.52886	-2.37544	-57.24242	-0.75375	0.00000
1/	39 (C)	-0.24398	-0.00049	0.79837	0.13623	-26.53433	0.01730
1/	40 (C)	-0.00094	-0.24316	0.76942	26.33095	-0.30302	-0.04176
2/	1	-0.00001	-0.00002	0.48501	0.16840	-0.06893	0.00000
2/	2	0.11546	0.27874	-115.71968	-49.98740	20.70546	-0.00000
2/	3	0.11546	0.27874	-115.71968	-49.98740	20.70546	-0.00000
2/	4	0.11546	0.27874	-115.71968	-49.98740	20.70546	-0.00000
2/	5	-11.16202	-0.19360	-0.45874	20.00008	-1205.49875	0.00000
2/	6	0.01069	11.57633	0.32849	-1250.24326	1.15412	-0.00000
2/	7	0.08066	-115.80034	23.52945	12499.80875	8.71092	8.23623
2/	8	-115.63903	0.08066	9.74622	8.71092	-12482.38691	19.88401
2/	9 (C)	-0.00036	-0.00086	0.83217	0.31636	-0.13104	0.00000
2/	10 (C)	-0.00231	-0.00557	2.31439	0.99975	-0.41411	0.00000
2/	11 (C)	-0.32622	-0.00128	-1.84527	-0.17671	-35.10184	-0.00000
2/	12 (C)	0.00214	0.34464	-1.82219	-37.53595	0.36169	-0.00000
2/	13 (C)	-0.24284	-0.00017	0.02047	0.01829	-26.21301	0.04176
2/	14 (C)	-0.00017	-0.24318	0.04941	26.24960	-0.01829	-0.01730
2/	15 (C)	-0.00036	-0.00086	0.83217	0.31636	-0.13104	0.00000
2/	16 (C)	-0.00267	-0.00644	3.14657	1.31611	-0.54515	0.00000
2/	17 (C)	-0.32658	-0.00214	-1.01309	0.13958	-35.23288	-0.00000
2/	18 (C)	0.00179	0.34378	-0.98001	-37.21959	0.23064	-0.00000
2/	19 (C)	-0.24320	-0.00103	0.85264	0.33466	-26.34405	0.04176
2/	20 (C)	-0.00053	-0.24404	0.88159	26.56599	-0.14934	-0.01730
2/	21 (C)	-0.24678	-0.00603	1.18402	0.93359	-26.76800	-0.00000
2/	22 (C)	-0.00048	0.25344	1.20133	-27.08579	-0.17036	-0.00000
2/	23 (C)	-0.12958	-0.00513	2.57871	1.07578	-14.20348	0.02192
2/	24 (C)	-0.00218	-0.13271	2.59391	14.84721	-0.45123	-0.00908
2/	25 (C)	-0.33644	-0.00179	-1.34596	0.01304	-35.18047	-0.00000
2/	26 (C)	0.00193	0.34412	-1.32288	-37.34613	0.28306	-0.00000
2/	27 (C)	-0.17020	-0.00064	0.51363	0.20262	-18.42773	0.02923
2/	28 (C)	-0.00033	-0.17074	0.53389	18.56454	-0.09143	-0.01211
2/	29 (C)	-0.00050	-0.00121	1.16504	0.44291	-0.18346	0.00000

Node/Case		FX (kip)	FY (kip)	FZ (kip)	MX (kip-in)	MY (kip-in)	MZ (kip-in)
2/	30 (C)	-0.00158	-0.00382	2.15581	0.87951	-0.36431	0.00000
2/	31 (C)	-0.26510	-0.01097	3.22543	1.83781	-28.90130	-0.00000
2/	32 (C)	-0.00241	0.26576	3.24389	-28.04953	-0.53048	-0.00000
2/	33 (C)	-0.52354	-0.00586	-0.79662	0.59666	-56.52725	-0.00000
2/	34 (C)	0.00184	0.54760	-0.75970	-59.17801	0.21439	-0.00000
2/	35 (C)	-0.24373	-0.00232	1.48195	0.59788	-26.45308	0.04176
2/	36 (C)	-0.00106	-0.24533	1.51090	26.82918	-0.25837	-0.01730
2/	37 (C)	-0.52228	-0.00282	-2.20347	0.00187	-56.28088	-0.00000
2/	38 (C)	0.00311	0.55065	-2.16654	-59.77279	0.46076	-0.00000
2/	39 (C)	-0.24316	-0.00094	0.76942	0.30302	-26.33095	0.04176
2/	40 (C)	-0.00049	-0.24398	0.79837	26.53433	-0.13623	-0.01730
3/	1	0.00001	-0.00002	0.48501	0.16840	0.06893	0.00000
3/	2	-0.11546	0.27874	-115.71968	-49.98740	-20.70546	-0.00000
3/	3	-0.11546	0.27874	-115.71968	-49.98740	-20.70546	-0.00000
3/	4	-0.11546	0.27874	-115.71968	-49.98740	-20.70546	-0.00000
3/	5	-11.17534	-0.34167	-4.10840	36.90077	-1206.93618	0.00000
3/	6	-0.01069	11.57633	0.32849	-1250.24326	-1.15412	-0.00000
3/	7	0.08066	-115.80034	23.52945	12499.80875	8.71092	8.23623
3/	8	-115.63903	0.08066	-9.74622	-8.71092	-12482.38691	19.88401
3/	9 (C)	0.00036	-0.00086	0.83217	0.31636	0.13104	0.00000
3/	10 (C)	0.00231	-0.00557	2.31439	0.99975	0.41411	0.00000
3/	11 (C)	-0.33027	-0.00563	-1.95259	0.29321	-35.79962	0.00000
3/	12 (C)	-0.00214	0.34464	-1.82219	-37.53595	-0.36169	-0.00000
3/	13 (C)	-0.24284	0.00017	-0.02047	-0.01829	-26.21301	0.04176
3/	14 (C)	0.00017	-0.24318	0.04941	26.24960	0.01829	0.01730
3/	15 (C)	0.00036	-0.00086	0.83217	0.31636	0.13104	0.00000
3/	16 (C)	0.00267	-0.00644	3.14657	1.31611	0.54515	0.00000
3/	17 (C)	-0.32991	-0.00549	-1.12041	0.60958	-35.66658	0.00000
3/	18 (C)	-0.00179	0.34378	-0.99001	-37.21959	-0.23064	-0.00000
3/	19 (C)	-0.24248	-0.00060	0.81171	0.29807	-26.08197	0.04176
3/	20 (C)	0.00053	-0.24404	0.88159	26.56599	0.14934	0.01730
3/	21 (C)	-0.24561	-0.00926	1.10353	1.28608	-26.40809	0.00000
3/	22 (C)	0.00048	0.25344	1.20133	-27.08579	0.17036	-0.00000
3/	23 (C)	-0.12540	-0.00495	2.55722	1.05657	-13.32021	0.02192
3/	24 (C)	0.00218	-0.13271	2.59391	14.84721	0.45123	0.00908
3/	25 (C)	-0.33006	-0.00515	-1.45328	0.48303	-35.72100	0.00000

Node/Case		FX (kip)	FY (kip)	FZ (kip)	MX (kip-in)	MY (kip-in)	MZ (kip-in)
3/	26 (C)	-0.00193	0.34412	-1.32288	-37.34613	-0.28306	-0.00000
3/	27 (C)	-0.16978	-0.00040	0.48498	0.17701	-18.27048	0.02923
3/	28 (C)	0.00033	-0.17074	0.53389	18.56454	0.09143	0.01211
3/	29 (C)	0.00050	-0.00121	1.16504	0.44291	0.18346	0.00000
3/	30 (C)	0.00158	0.00382	2.15581	0.87951	0.36431	0.00000
3/	31 (C)	-0.28009	-0.01446	3.13957	2.21380	-27.81987	0.00000
3/	32 (C)	0.00241	0.26576	3.24389	-28.04953	0.53048	-0.00000
3/	33 (C)	-0.52885	-0.01283	-0.98834	1.34865	-56.91509	0.00000
3/	34 (C)	-0.00184	0.54760	-0.75970	-59.17801	-0.21439	-0.00000
3/	35 (C)	-0.24195	-0.00198	1.44103	0.56129	-25.97294	0.04176
3/	36 (C)	0.00106	-0.24533	1.51090	26.82918	0.25837	0.01730
3/	37 (C)	-0.52811	-0.00978	-2.37519	0.75387	-57.16148	0.00000
3/	38 (C)	-0.00311	0.55065	-2.16654	-59.77279	-0.46076	-0.00000
3/	39 (C)	-0.24252	-0.00061	0.72849	0.26643	-26.09507	0.04176
3/	40 (C)	0.00049	-0.24398	0.79837	26.53433	0.13623	0.01730
4/	1	0.00002	-0.00001	0.48501	0.06893	0.16840	-0.00000
4/	2	-0.27874	0.11546	-115.71968	-20.70546	-49.98740	0.00000
4/	3	-0.27874	0.11546	-115.71968	-20.70546	-49.98740	0.00000
4/	4	-0.27874	0.11546	-115.71968	-20.70546	-49.98740	0.00000
4/	5	-11.56034	0.01066	0.34150	-1.15170	-1248.51671	0.00000
4/	6	0.34165	11.19129	-4.11379	-1209.65790	36.89835	-0.00000
4/	7	0.08066	-115.63903	9.74622	12482.38691	8.71092	19.88401
4/	8	-115.80034	0.08066	-23.52945	-8.71092	-12499.80875	8.23623
4/	9 (C)	0.00086	-0.00036	0.83217	0.13104	0.31636	-0.00000
4/	10 (C)	0.00557	-0.00231	2.31439	0.41411	0.99975	-0.00000
4/	11 (C)	-0.34417	0.00214	-1.82181	-0.36162	-37.48521	0.00000
4/	12 (C)	0.00563	0.33074	-1.95275	-35.85022	0.29314	-0.00000
4/	13 (C)	-0.24318	0.00017	-0.04941	-0.01829	-26.24960	0.01730
4/	14 (C)	0.00017	-0.24284	0.02047	26.21301	0.01829	0.04176
4/	15 (C)	0.00086	-0.00036	0.83217	0.13104	0.31636	-0.00000
4/	16 (C)	0.00644	-0.00267	3.14657	0.54515	1.31611	-0.00000
4/	17 (C)	-0.34331	0.00178	-0.98963	-0.23057	-37.16884	0.00000
4/	18 (C)	0.00649	0.33038	-1.12057	-35.71918	0.60951	-0.00000
4/	19 (C)	-0.24232	-0.00019	0.78276	0.11273	-25.93323	0.01730
4/	20 (C)	0.00105	-0.24320	0.85264	26.34405	0.33466	0.04176
4/	21 (C)	-0.25309	-0.00048	1.20161	0.17041	-27.04773	0.00000

Node/Case		FX (kip)	FY (kip)	FZ (kip)	MX (kip-in)	MY (kip-in)	MZ (kip-in)
4/	22 (C)	0.00926	0.24597	1.10341	-26.44604	1.28603	-0.00000
4/	23 (C)	-0.12263	-0.00200	2.54203	0.43202	-12.71486	0.00908
4/	24 (C)	0.00513	-0.12958	2.57871	14.20348	1.07578	0.02192
4/	25 (C)	-0.34365	0.00163	-1.32250	-0.29299	-37.29639	0.00000
4/	26 (C)	0.00815	0.33053	-1.45344	-35.77160	0.48296	-0.00000
4/	27 (C)	-0.1697	-0.00310	0.46472	0.06582	-18.19493	0.01211
4/	28 (C)	0.00064	-0.17320	0.51363	18.42773	0.20262	0.02923
4/	29 (C)	0.00127	-0.00250	1.16504	0.18346	0.44291	-0.00000
4/	30 (C)	0.00382	-0.00158	2.15581	0.36431	0.87951	0.00000
4/	31 (C)	-0.26538	-0.00241	3.24419	0.53063	-28.00893	0.00000
4/	32 (C)	0.01446	0.26347	3.13944	-27.86035	2.21375	-0.00000
4/	33 (C)	-0.54685	0.00184	-0.75908	-0.21428	-59.09882	0.00000
4/	34 (C)	0.01283	0.52760	-0.96859	-56.99605	1.34854	0.00000
4/	35 (C)	-0.24103	-0.00072	1.41208	0.22178	-25.67001	0.01730
4/	36 (C)	0.00233	-0.24373	1.48195	26.45308	0.59788	0.04176
4/	37 (C)	-0.54990	0.00310	-2.16593	-0.46065	-59.69160	0.00000
4/	38 (C)	0.00978	0.52886	-2.37544	-57.24242	0.75375	-0.00000
4/	39 (C)	-0.24241	-0.00015	0.69954	0.09904	-25.96487	0.01730
4/	40 (C)	0.00094	-0.24316	0.76942	26.33095	0.30302	0.04176
5/	1	0.00002	0.00001	0.48501	-0.06893	0.16840	-0.00000
5/	2	-0.27874	-0.11546	-115.71968	20.70546	-49.98740	0.00000
5/	3	-0.27874	-0.11546	-115.71968	20.70546	-49.98740	0.00000
5/	4	-0.27874	-0.11546	-115.71968	20.70546	-49.98740	0.00000
5/	5	-11.56034	-0.01066	0.34150	1.15170	-1248.51671	0.00000
5/	6	0.19362	11.17797	-0.45135	-1207.22047	20.91148	-0.00000
5/	7	-0.08066	-115.63903	-9.74622	12482.38691	-8.71092	19.88401
5/	8	-115.80034	-0.08066	-23.52945	8.71092	-12499.80875	-8.23623
5/	9 (C)	0.00086	0.00036	0.83217	-0.13104	0.31636	-0.00000
5/	10 (C)	0.00557	0.00231	2.31439	-0.41411	0.99975	-0.00000
5/	11 (C)	-0.34417	-0.00214	-1.82181	0.36162	-37.48521	0.00000
5/	12 (C)	0.00128	0.32569	-1.84511	-35.15244	-0.17671	-0.00000
5/	13 (C)	-0.24318	-0.00017	-0.04941	0.01829	-26.24960	-0.01730
5/	14 (C)	-0.00017	-0.24284	-0.02047	26.21301	-0.01829	0.04176
5/	15 (C)	0.00086	0.00036	0.83217	-0.13104	0.31636	-0.00000
5/	16 (C)	0.00644	0.00267	3.14657	-0.54515	1.31611	-0.00000
5/	17 (C)	-0.34331	-0.00178	-0.98963	0.23057	-37.16884	0.00000

Node/Case		FX (kip)	FY (kip)	FZ (kip)	MX (kip-in)	MY (kip-in)	MZ (kip-in)
6/	18 (C)	0.00214	0.32705	-1.01293	-35.28348	0.13965	-0.00000
6/	19 (C)	-0.24232	0.00019	0.78276	-0.11275	-25.93323	-0.01730
6/	20 (C)	0.00069	-0.24249	0.81171	26.08197	0.29807	0.04176
6/	21 (C)	-0.25309	0.00048	1.20161	-0.17041	-27.04773	0.00000
6/	22 (C)	0.00600	0.24711	1.18414	-26.80596	0.93364	-0.00000
6/	23 (C)	-0.12263	0.00200	2.54203	-0.43202	-12.71486	-0.00908
6/	24 (C)	0.00495	-0.12540	2.55722	13.32021	1.05657	0.02192
6/	25 (C)	-0.34365	-0.00193	-1.32250	0.78299	-37.29539	0.00000
6/	26 (C)	0.00179	0.32691	-1.34580	-35.23107	0.01311	-0.00000
6/	27 (C)	-0.16971	0.00010	0.46472	-0.06582	-18.18490	-0.01211
6/	28 (C)	0.00040	-0.16978	0.48498	18.27048	0.17701	0.02923
6/	29 (C)	0.00121	0.00050	1.16504	-0.18346	0.44291	-0.00000
6/	30 (C)	0.00382	0.00158	2.15581	-0.36431	0.87951	-0.00000
6/	31 (C)	-0.28538	0.00241	3.24419	-0.53053	-28.00893	0.00000
6/	32 (C)	0.01098	0.26548	3.22555	-28.94178	1.83786	-0.00000
6/	33 (C)	-0.54685	-0.00184	-0.75908	0.21428	-59.99683	0.00000
6/	34 (C)	0.00587	0.52429	-0.79637	-56.60821	0.59677	-0.00000
6/	35 (C)	-0.24103	0.00072	1.41208	-0.22178	-25.57001	-0.01730
6/	36 (C)	0.00198	-0.24195	1.44102	25.97294	0.56129	0.04176
6/	37 (C)	-0.54990	-0.00310	-2.16992	0.46065	-59.59160	0.00000
6/	38 (C)	0.00282	0.52303	-2.20322	-56.36185	0.00199	-0.00000
6/	39 (C)	-0.24241	0.00015	0.69954	-0.09964	-25.96487	-0.01730
6/	40 (C)	0.00061	-0.24252	0.72849	26.09507	0.76643	0.04176
6/	1	0.00001	0.00002	0.48501	-0.16640	0.06893	0.00000
6/	2	-0.11546	0.27874	-115.71968	49.98740	-20.70546	-0.00000
6/	3	-0.11546	-0.27874	-115.71968	49.98740	-20.70546	-0.00000
6/	4	-0.11546	-0.27874	-115.71968	49.98740	-20.70546	-0.00000
6/	5	-11.17534	0.34167	-4.10840	-36.90077	-1205.33618	-0.00000
6/	6	0.00746	11.00113	4.23665	-1188.12214	0.80576	0.00000
6/	7	-0.08066	-115.80034	-23.52945	12499.80875	-8.71092	8.23623
6/	8	-115.63903	-0.08066	9.74622	8.71092	-12482.38691	-19.88401
6/	9 (C)	0.00036	0.00086	0.83217	-0.31636	0.13104	0.00000
6/	10 (C)	0.00231	0.00557	2.31439	0.99975	0.41411	0.00000
6/	11 (C)	-0.33027	0.00563	-1.95259	-0.29321	-35.79962	-0.00000
6/	12 (C)	-0.00161	0.31891	-1.70733	-34.12761	0.30406	0.00000
6/	13 (C)	-0.24284	-0.00017	-0.02047	0.01829	-26.21301	-0.04176

Node/Case		FX (kip)	FY (kip)	FZ (kip)	MX (kip-in)	MY (kip-in)	MZ (kip-in)
6/	14 (C)	-0.00017	-0.24318	-0.04941	26.24960	-0.01829	0.01730
6/	15 (C)	0.00035	0.00085	0.83217	-0.31636	0.13104	0.00000
6/	16 (C)	0.00267	0.00644	3.14657	-1.31611	0.54515	0.00000
6/	17 (C)	-0.32991	0.00649	-1.12041	-0.60958	-35.36858	-0.00000
6/	18 (C)	-0.00125	0.31977	-0.87515	-34.44397	-0.17304	0.00000
6/	19 (C)	-0.24249	0.00069	0.81171	0.29807	26.08197	-0.04176
6/	20 (C)	0.00019	-0.24232	0.78276	25.93323	0.11275	0.01730
6/	21 (C)	-0.24561	0.00926	1.10353	-1.28606	-26.40809	-0.00000
6/	22 (C)	0.00088	0.24423	1.28747	-26.66186	0.21356	0.00000
6/	23 (C)	-0.12540	0.00495	2.55722	-1.05657	-13.32021	-0.02192
6/	24 (C)	0.00200	-0.12263	2.54203	12.71486	0.43202	0.00908
6/	25 (C)	-0.33005	0.00815	-1.45326	-0.48305	-35.72100	-0.00000
6/	26 (C)	-0.00139	0.31943	-1.20802	-34.31743	-0.22546	0.00000
6/	27 (C)	-0.16978	0.00040	0.48498	-0.17701	-18.27048	-0.02923
6/	28 (C)	0.00010	-0.16971	0.46472	18.18490	0.06582	0.01211
6/	29 (C)	0.00050	0.00121	1.16504	-0.44291	0.18346	0.00000
6/	30 (C)	0.00158	0.00382	2.15581	-0.87951	0.36431	0.00000
6/	31 (C)	-0.26009	0.01448	3.13957	-2.21380	-27.81987	-0.00000
6/	32 (C)	0.00284	0.26508	3.33578	-29.28132	0.57656	0.00000
6/	33 (C)	-0.52685	0.01283	-0.96834	-1.34865	-56.91509	-0.00000
6/	34 (C)	-0.00099	0.51408	-0.57592	-55.48369	-0.12223	0.00000
6/	35 (C)	0.24199	0.00198	1.44102	-0.56129	-25.97294	-0.04176
6/	36 (C)	0.00072	-0.24103	1.41208	25.57001	0.22178	0.01730
6/	37 (C)	-0.52811	0.00978	-2.37519	-0.75387	-57.16146	-0.00000
6/	38 (C)	-0.00225	0.51103	-1.98277	-54.88890	-0.36850	0.00000
6/	39 (C)	-0.24252	0.00061	0.72849	-0.26643	-26.09507	-0.04176
6/	40 (C)	0.00015	-0.24241	0.69954	25.96487	0.09964	0.01730
7/	1	-0.00001	0.00002	0.48501	-0.16640	-0.06893	0.00000
7/	2	0.11546	-0.27874	-115.71968	49.98740	20.70546	-0.00000
7/	3	0.11546	-0.27874	-115.71968	49.98740	20.70546	-0.00000
7/	4	0.11546	-0.27874	-115.71968	49.98740	20.70546	-0.00000
7/	5	-11.10203	0.19300	-0.45674	-20.90908	-1205.49675	0.00000
7/	6	-0.00746	11.00113	4.23665	-1188.12214	-0.80576	0.00000
7/	7	0.08066	-115.80034	-23.52945	12499.80875	8.71092	-8.23623
7/	8	-115.63903	0.08066	9.74622	-8.71092	-12482.38691	-19.88401
7/	9 (C)	-0.00036	0.00086	0.83217	-0.31636	-0.13104	0.00000

Node/Case		FX (kip)	FY (kip)	FZ (kip)	MX (kip-in)	MY (kip-in)	MZ (kip-in)
7/	10 (C)	-0.00231	0.00557	2.31439	-0.99975	-0.41411	0.00000
7/	11 (C)	-0.32622	0.00126	-1.94527	0.17678	-35.10184	0.00000
7/	12 (C)	0.00161	0.31891	-1.70733	-34.12761	0.30406	0.00000
7/	13 (C)	-0.24284	0.00017	0.02047	-0.01829	-26.21301	-0.04176
7/	14 (C)	0.00017	-0.24318	-0.04941	26.24960	0.01829	-0.01730
7/	15 (C)	-0.00036	0.00086	0.83217	-0.31636	-0.13104	0.00000
7/	16 (C)	-0.00267	0.00644	3.14657	-1.31611	-0.54515	0.00000
7/	17 (C)	-0.32658	0.00214	-1.01309	-0.13958	-35.23288	0.00000
7/	18 (C)	0.00125	0.31977	-0.87515	-34.44397	0.17304	0.00000
7/	19 (C)	-0.24330	0.00103	0.85264	-0.33466	-26.34405	-0.04176
7/	20 (C)	-0.00019	-0.24232	0.78276	25.93323	-0.11275	-0.01730
7/	21 (C)	-0.24676	0.00600	1.18402	-0.93359	-26.76800	0.00000
7/	22 (C)	-0.00088	0.24423	1.28747	-26.66186	-0.21356	0.00000
7/	23 (C)	-0.12958	0.00513	2.57871	-1.07578	-14.20346	-0.02192
7/	24 (C)	-0.00200	-0.12263	2.54203	12.71486	-0.43202	-0.00908
7/	25 (C)	-0.32844	0.00179	-1.34596	-0.01304	-35.18047	0.00000
7/	26 (C)	0.00139	0.31943	-1.20802	-34.31743	0.22546	0.00000
7/	27 (C)	-0.17020	0.00054	0.51363	-0.20262	-18.42773	-0.02923
7/	28 (C)	-0.00010	-0.15971	0.46472	18.18490	-0.06582	-0.01211
7/	29 (C)	-0.00050	0.00121	1.16504	-0.44291	-0.18346	0.00000
7/	30 (C)	-0.00158	0.00382	2.15581	-0.87951	-0.36431	0.00000
7/	31 (C)	-0.26510	0.01097	3.22543	-1.83781	-28.90130	0.00000
7/	32 (C)	-0.00284	0.26508	3.33578	29.28132	-0.57656	0.00000
7/	33 (C)	-0.52354	0.00586	-0.79662	-0.59666	-56.52725	0.00000
7/	34 (C)	0.00099	0.51408	-0.57592	-55.48369	0.12223	0.00000
7/	35 (C)	-0.24373	0.00232	1.48195	-0.59789	-26.45308	-0.04176
7/	36 (C)	-0.00072	-0.24103	1.41208	25.57001	-0.22178	-0.01730
7/	37 (C)	-0.52228	0.00282	-2.20347	-0.00187	-55.28088	0.00000
7/	38 (C)	0.00225	0.51103	-1.98277	-54.88890	0.36850	0.00000
7/	39 (C)	-0.24316	0.00094	0.75942	-0.30302	-25.33095	-0.04176
7/	40 (C)	-0.00015	-0.24241	0.69954	25.96487	0.09964	-0.01730
8/	1	-0.00002	0.00001	0.48501	-0.06893	-0.16640	-0.00000
8/	2	0.27874	-0.11546	-115.71968	20.70546	49.98740	0.00000
8/	3	0.27874	-0.11546	-115.71968	20.70546	49.98740	0.00000
8/	4	0.27874	-0.11546	-115.71968	20.70546	49.98740	0.00000
8/	5	-10.98514	0.00744	4.22363	-0.80335	-1188.39559	0.00000

Node/Case		FX (kip)	FY (kip)	FZ (kip)	MX (kip-in)	MY (kip-in)	MZ (kip-in)
8/	6	-0.19362	11.17797	-0.45135	-1207.22047	-20.91148	-0.00000
8/	7	0.08066	-115.63903	9.74622	12482.38691	8.71092	-19.88401
8/	8	-115.80034	0.08066	23.52945	-8.71092	-12499.80875	-8.23623
8/	9 (C)	-0.00086	0.00036	0.83217	0.13104	0.31636	-0.00000
8/	10 (C)	-0.00557	0.00231	2.31439	-0.41411	-0.99975	-0.00000
8/	11 (C)	-0.31844	-0.00161	-1.70771	0.30416	-24.07087	0.00000
8/	12 (C)	-0.00126	0.32669	-1.84511	-35.15244	0.17671	-0.00000
8/	13 (C)	-0.24318	0.00017	0.04941	-0.01829	-26.24960	-0.01730
8/	14 (C)	0.00017	-0.24284	-0.02047	26.21301	0.01829	-0.04176
8/	15 (C)	-0.00086	0.00036	0.83217	-0.13104	-0.31636	-0.00000
8/	16 (C)	-0.00644	0.00267	3.14657	-0.54515	-1.31611	-0.00000
8/	17 (C)	-0.31930	-0.00125	-0.87554	0.17312	-34.39323	0.00000
8/	18 (C)	-0.00214	0.32705	-1.01293	-35.28348	-0.13965	-0.00000
8/	19 (C)	-0.24404	0.00053	0.88159	-0.14934	-26.56586	-0.01730
8/	20 (C)	-0.00069	-0.24249	0.81171	-0.29807	-0.29807	-0.04176
8/	21 (C)	-0.24387	0.00088	1.28719	-0.21351	-26.62382	0.00000
8/	22 (C)	-0.00600	0.24711	1.18414	-26.80596	-0.93364	-0.00000
8/	23 (C)	-0.13271	0.00218	2.59391	-0.45123	-14.84721	-0.00908
8/	24 (C)	-0.00495	-0.12540	2.55722	13.32021	-1.05657	-0.02192
8/	25 (C)	-0.31896	-0.00140	1.20841	0.22553	34.26668	0.00000
8/	26 (C)	-0.00179	0.32691	1.34580	-35.23107	-0.01311	-0.00000
8/	27 (C)	-0.17074	0.00033	0.53389	-0.09143	-18.50454	-0.01211
8/	28 (C)	-0.00040	-0.16978	0.48498	18.27048	-0.17701	-0.02923
8/	29 (C)	-0.00121	0.00050	1.16504	-0.18346	-0.44291	-0.00000
8/	30 (C)	-0.00382	0.00158	2.15581	-0.36431	-0.87951	-0.00000
8/	31 (C)	-0.26471	0.00284	3.33547	-0.57650	-29.24073	0.00000
8/	32 (C)	-0.01098	0.26548	3.22555	-28.94178	-1.83786	-0.00000
8/	33 (C)	-0.51333	-0.00099	-0.57653	0.12235	-55.40250	0.00000
8/	34 (C)	-0.00587	0.52429	0.79637	-56.60821	-0.59677	-0.00000
8/	35 (C)	-0.24533	0.00108	1.51090	-0.25837	-26.62918	-0.01730
8/	36 (C)	-0.00198	-0.24195	1.44102	25.97294	-0.56129	-0.04176
8/	37 (C)	-0.51028	-0.00225	-1.98338	0.36871	-54.80771	0.00000
8/	38 (C)	-0.00282	0.52303	-2.20322	-56.36185	-0.00199	-0.00000
8/	39 (C)	-0.24396	0.00049	0.79837	-0.13623	-26.53433	-0.01730
8/	40 (C)	-0.00061	-0.24252	0.72849	26.09507	-0.26643	-0.04176

Node/Case	FX (kip)	FY (kip)	FZ (kip)	MX (kip-in)	MY (kip-in)	MZ (kip-in)
Case 1	FRMWT					
Sum of val.	-0.00000	0.00000	3.88012	-0.00000	-0.00000	0.00000
Sum of reac.	-0.00000	0.00000	3.88012	0.00000	-0.00000	0.00000
Sum of forc.	0.00000	-0.00000	-3.88012	0.00000	0.00000	-0.00000
Check val.	-0.00000	0.00000	0.00000	0.00000	-0.00000	0.00000
Precision	1.02123e-013	1.85505e-019				
Case 2	DL					
Sum of val.	0.00000	-0.00000	-925.75747	0.00000	0.00000	-0.00000
Sum of reac.	0.00000	-0.00000	-925.75747	-0.00000	0.00000	0.00000
Sum of forc.	0.0	-0.00000	925.75747	0.00000	0.0	-0.00000
Check val.	0.00000	-0.00000	-0.00000	-0.00000	0.00000	0.00000
Precision	1.11347e-013	1.07637e-014				
Case 3	SL					
Sum of val.	0.00000	-0.00000	-925.75747	0.00000	0.00000	-0.00000
Sum of reac.	0.00000	-0.00000	-925.75747	-0.00000	0.00000	0.00000
Sum of forc.	0.0	-0.00000	925.75747	0.00000	0.0	-0.00000
Check val.	0.00000	-0.00000	-0.00000	-0.00000	0.00000	0.00000
Precision	1.11347e-013	1.07637e-014				
Case 4	UPLIFT					
Sum of val.	0.00000	-0.00000	-925.75747	0.00000	0.00000	-0.00000
Sum of reac.	0.00000	-0.00000	-925.75747	-0.00000	0.00000	0.00000
Sum of forc.	0.0	-0.00000	925.75747	0.00000	0.0	-0.00000
Check val.	0.00000	-0.00000	-0.00000	-0.00000	0.00000	0.00000
Precision	1.11347e-013	1.07637e-014				
Case 5	WLX					
Sum of val.	-89.76569	0.00000	0.00000	-0.00000	-9694.69448	0.00000
Sum of reac.	-89.76569	0.00000	-0.00000	-0.00000	-11488.95210	0.00000
Sum of forc.	89.76569	0.0	0.0	0.0	11488.95210	-0.00000
Check val.	0.00000	0.00000	-0.00000	-0.00000	0.00000	0.00000
Precision	2.68905e-012	1.50666e-024				
Case 6	WLY					

Node/Case	FX (kip)	FY (kip)	FZ (kip)	MX (kip-in)	MY (kip-in)	MZ (kip-in)
Sum of val.	0.00000	89.89340	0.00000	-9708.48755	-0.00000	-0.00000
Sum of reac.	-0.00000	89.89340	0.00000	-11512.88934	-0.00000	0.00000
Sum of forc.	0.0	-89.89340	0.0	11512.88934	0.0	-0.00000
Check val.	-0.00000	-0.00000	0.00000	0.00000	-0.00000	0.00000
Precision	1.95441e-014	2.34456e-025				
Case 7	EQY					
Sum of val.	0.00000	-925.75747	-0.00000	99928.78266	0.00000	0.00000
Sum of reac.	0.00000	-925.75747	-0.00000	118265.81094	0.00000	-0.00000
Sum of forc.	-0.00000	925.75747	0.0	-118265.81094	-0.00000	-0.00000
Check val.	0.00000	0.00000	-0.00000	-0.00000	0.00000	-0.00000
Precision	1.75565e-012	2.22193e-025				
Case 8	EQX					
Sum of val.	-925.75747	0.00000	-0.00000	-0.00000	-99928.78266	-0.00000
Sum of reac.	-925.75747	0.00000	-0.00000	-0.00000	-118265.81094	0.00000
Sum of forc.	925.75747	0.00000	0.0	-0.00000	118265.81094	-0.00000
Check val.	0.00000	0.00000	-0.00000	-0.00000	0.00000	0.00000
Precision	2.00399e-012	1.48418e-024				
Case 9 (C)	S|D					
Sum of val.	-0.00000	0.00000	6.65739	-0.00000	-0.00000	0.00000
Sum of reac.	-0.00000	0.00000	6.65739	0.00000	-0.00000	0.00000
Sum of forc.	0.00000	-0.00000	-6.65739	-0.00000	0.00000	-0.00000
Check val.	-0.00000	0.00000	0.00000	0.00000	-0.00000	0.00000
Precision	1.01789e-013	-3.21056e-017				
Case 10 (C)	S|S					
Sum of val.	-0.00000	0.00000	18.51515	-0.00000	-0.00000	0.00000
Sum of reac.	-0.00000	0.00000	18.51515	0.00000	-0.00000	-0.00000
Sum of forc.	0.0	0.00000	-18.51515	-0.00000	0.0	0.00000
Check val.	-0.00000	0.00000	0.00000	0.00000	-0.00000	-0.00000
Precision	-2.22594e-015	-2.15274e-016				
Case 11 (C)	S|WX					
Sum of val.	-2.63821	0.00000	-14.65474	-0.00000	-284.92707	0.00000

Node/Case	FX (kip)	FY (kip)	FZ (kip)	MX (kip-in)	MY (kip-in)	MZ (kip-in)
Sum of reac.	-2.63821	0.00000	-14.65474	-0.00000	-337.66030	0.00000
Sum of forc.	2.63821	-0.00000	14.65474	0.00000	337.66030	-0.00000
Check val.	0.00000	0.00000	-0.00000	-0.00000	0.00000	0.00000
Precision	8.07938e-014	1.70390e-016				
Case 12 (C)	S|WY					
Sum of val.	-0.00000	2.64197	-14.65474	-285.33245	-0.00000	-0.00000
Sum of reac.	-0.00000	2.64197	-14.65474	-338.36382	-0.00000	0.00000
Sum of forc.	0.0	-2.64197	14.65474	338.36382	0.0	-0.00000
Check val.	-0.00000	-0.00000	-0.00000	0.00000	-0.00000	0.00000
Precision	2.33702e-015	1.70390e-016				
Case 13 (C)	S|EX					
Sum of val.	-1.94409	0.00000	-0.00000	-0.00000	-209.85044	-0.00000
Sum of reac.	-1.94409	0.00000	-0.00000	-0.00000	-248.35820	0.00000
Sum of forc.	1.94409	0.00000	0.0	-0.00000	248.35820	-0.00000
Check val.	0.00000	0.00000	-0.00000	-0.00000	0.00000	0.00000
Precision	4.20638e-015	3.11678e-027				
Case 14 (C)	S|EY					
Sum of val.	0.00000	-1.94409	-0.00000	209.85044	0.00000	0.00000
Sum of reac.	0.00000	-1.94409	-0.00000	248.35820	0.00000	-0.00000
Sum of forc.	-0.00000	1.94409	0.0	-248.35820	-0.00000	-0.00000
Check val.	0.00000	0.00000	-0.00000	-0.00000	0.00000	-0.00000
Precision	3.68687e-015	4.68605e-028				
Case 15 (C)	MC|ASCE(2.4.1.1)D					
Sum of val.	-0.00000	0.00000	6.65739	-0.00000	0.00000	0.00000
Sum of reac.	-0.00000	0.00000	6.65739	0.00000	-0.00000	0.00000
Sum of forc.	0.00000	-0.00000	-6.65739	-0.00000	0.00000	-0.00000
Check val.	-0.00000	0.00000	0.00000	0.00000	-0.00000	0.00000
Precision	1.01789e-013	-3.21056e-017				
Case 16 (C)	MC|ASCE(2.4.1.3)S					
Sum of val.	-0.00000	0.00000	25.17254	-0.00000	-0.00000	0.00000
Sum of reac.	-0.00000	0.00000	25.17254	0.00000	-0.00000	0.00000

Node/Case	FX (kip)	FY (kip)	FZ (kip)	MX (kip-in)	MY (kip-in)	MZ (kip-in)
Sum of forc.	0.00000	-0.00000	-25.17254	-0.00000	0.00000	-0.00000
Check val.	-0.00000	0.00000	0.00000	0.00000	-0.00000	0.00000
Precision	9.95618e-014	-2.47380e-016				
Case 17 (C)	MC|ASCE(2.4.1.5)WX					
Sum of val.	-2.63821	0.00000	-7.99735	-0.00000	-284.92707	0.00000
Sum of reac.	-2.63821	0.00000	-7.99735	-0.00000	-337.66030	0.00000
Sum of forc.	2.63821	-0.00000	7.99735	0.00000	337.66030	-0.00000
Check val.	0.00000	0.00000	-0.00000	-0.00000	0.00000	0.00000
Precision	1.82583e-013	1.38284e-016				
Case 18 (C)	MC|ASCE(2.4.1.5)WY					
Sum of val.	-0.00000	2.64197	-7.99735	-285.33245	-0.00000	-0.00000
Sum of reac.	-0.00000	2.64197	-7.99735	-338.36382	-0.00000	0.00000
Sum of forc.	0.00000	-2.64197	7.99735	338.36382	0.00000	-0.00000
Check val.	-0.00000	-0.00000	0.00000	0.00000	-0.00000	0.00000
Precision	1.04126e-013	1.38284e-016				
Case 19 (C)	MC|ASCE(2.4.1.5)EX					
Sum of val.	-1.94409	0.00000	6.65739	-0.00000	-209.85044	0.00000
Sum of reac.	-1.94409	0.00000	6.65739	-0.00000	-248.35820	0.00000
Sum of forc.	1.94409	0.00000	-6.65739	-0.00000	248.35820	-0.00000
Check val.	0.00000	0.00000	0.00000	-0.00000	0.00000	0.00000
Precision	1.05997e-013	-3.21056e-017				
Case 20 (C)	MC|ASCE(2.4.1.5)EY					
Sum of val.	0.00000	-1.94409	6.65739	209.85044	0.00000	0.00000
Sum of reac.	0.00000	-1.94409	6.65739	248.35820	0.00000	-0.00000
Sum of forc.	-0.00000	1.94409	-6.65739	-248.35820	0.00000	-0.00000
Check val.	0.00000	0.00000	-0.00000	-0.00000	0.00000	-0.00000
Precision	1.05476e-013	-3.21056e-017				
Case 21 (C)	MC|ASCE(2.4.1.6)WX					
Sum of val.	-1.97856	0.00000	9.55270	-0.00000	-213.69530	0.00000
Sum of reac.	-1.97856	0.00000	9.55270	-0.00000	-253.24523	0.00000
Sum of forc.	1.97856	-0.00000	-9.55270	-0.00000	253.24523	-0.00000

Node/Case	FX (kip)	FY (kip)	FZ (kip)	MX (kip-in)	MY (kip-in)	MZ (kip-in)
Check val.	0.00000	0.00000	0.00000	-0.00000	0.00000	0.00000
Precision	1.60714e-013	-6.57692e-017				
Case 22 (C)	MC|ASCE(2.4.1.6)WY					
Sum of val.	-0.00000	1.98148	9.55270	-213.99934	-0.00000	-0.00000
Sum of reac.	-0.00000	1.98148	9.55270	-253.77286	-0.00000	0.00000
Sum of forc.	0.00000	-1.98148	-9.55270	253.77286	0.00000	-0.00000
Check val.	-0.00000	-0.00000	0.00000	0.00000	-0.00000	0.00000
Precision	1.01871e-013	-6.57692e-017				
Case 23 (C)	MC|ASCE(2.4.1.6)EX					
Sum of val.	-1.02065	0.00000	20.54375	-0.00000	-110.17148	0.00000
Sum of reac.	-1.02065	0.00000	20.54375	0.00000	-130.38806	0.00000
Sum of forc.	1.02065	0.00000	-20.54375	-0.00000	130.38806	-0.00000
Check val.	0.00000	0.00000	0.00000	0.00000	0.00000	0.00000
Precision	1.02328e-013	-1.93561e-016				
Case 24 (C)	MC|ASCE(2.4.1.6)EY					
Sum of val.	0.00000	-1.02065	20.54375	110.17148	0.00000	0.00000
Sum of reac.	0.00000	-1.02065	20.54375	130.38806	-0.00000	-0.00000
Sum of forc.	-0.00000	1.02065	-20.54375	-130.38806	0.00000	-0.00000
Check val.	0.00000	0.00000	0.00000	-0.00000	-0.00000	-0.00000
Precision	1.02054e-013	-1.93561e-016				
Case 25 (C)	MC|ASCE(2.4.1.7)WX					
Sum of val.	-2.63821	0.00000	-10.66031	-0.00000	-284.92707	0.00000
Sum of reac.	-2.63821	0.00000	-10.66031	-0.00000	-337.69030	0.00000
Sum of forc.	2.63821	-0.00000	10.66031	0.00000	337.69030	-0.00000
Check val.	0.00000	0.00000	-0.00000	0.00000	0.00000	0.00000
Precision	1.41867e-013	1.51126e-016				
Case 26 (C)	MC|ASCE(2.4.1.7)WY					
Sum of val.	-0.00000	2.64197	-10.66031	-285.33245	-0.00000	-0.00000
Sum of reac.	-0.00000	2.64197	-10.66031	-338.35382	-0.00000	0.00000
Sum of forc.	0.00000	-2.64197	10.66031	338.35382	0.00000	-0.00000
Check val.	-0.00000	-0.00000	0.00000	0.00000	-0.00000	0.00000

Node/Case	FX (kip)	FY (kip)	FZ (kip)	MX (kip-in)	MY (kip-in)	MZ (kip-in)
Precision	5.34103e-014	1.51126e-016				
Case 27 (C)	MC|ASCE(2.4.1.8)EX					
Sum of val.	-1.35086	0.00000	3.99443	-0.00000	-146.89531	0.00000
Sum of reac.	-1.35086	0.00000	3.99443	-0.00000	-173.85074	0.00000
Sum of forc.	1.35086	0.00000	-3.99443	-0.00000	173.85074	-0.00000
Check val.	0.00000	0.00000	0.00000	-0.00000	0.00000	0.00000
Precision	5.40191e-014	-1.92634e-017				
Case 28 (C)	MC|ASCE(2.4.1.8)EY					
Sum of val.	0.00000	-1.35086	3.99443	146.89531	0.00000	0.00000
Sum of reac.	0.00000	-1.35086	3.99443	173.85074	0.00000	-0.00000
Sum of forc.	-0.00000	1.35086	-3.99443	-173.85074	0.00000	-0.00000
Check val.	0.00000	0.00000	-0.00000	-0.00000	0.00000	-0.00000
Precision	5.35541e-014	-1.92634e-017				
Case 29 (C)	B|ASCE(2.3.2.1)D					
Sum of val.	-0.00000	0.00000	9.32035	-0.00000	-0.00000	0.00000
Sum of reac.	-0.00000	0.00000	9.32035	0.00000	-0.00000	0.00000
Sum of forc.	0.00000	-0.00000	-9.32035	-0.00000	0.00000	-0.00000
Check val.	0.00000	0.00000	0.00000	0.00000	0.00000	0.00000
Precision	1.42504e-013	-4.49479e-017				
Case 30 (C)	B|ASCE(2.3.2.2)S					
Sum of val.	-0.00000	0.00000	17.24644	-0.00000	-0.00000	0.00000
Sum of reac.	-0.00000	0.00000	17.24644	0.00000	-0.00000	0.00000
Sum of forc.	0.00000	-0.00000	-17.24644	-0.00000	0.00000	-0.00000
Check val.	-0.00000	0.00000	0.00000	0.00000	-0.00000	0.00000
Precision	1.21033e-013	-1.46164e-016				
Case 31 (C)	B|ASCE(2.3.2.3)WX					
Sum of val.	-2.11057	0.00000	25.88931	-0.00000	-227.94166	0.00000
Sum of reac.	-2.11057	0.00000	25.88931	-0.00000	-270.12824	0.00000
Sum of forc.	2.11057	-0.00000	-25.88931	-0.00000	270.12824	-0.00000
Check val.	0.00000	0.00000	0.00000	0.00000	0.00000	0.00000
Precision	1.83210e-013	-2.46654e-016				

Node/Case	FX (kip)	FY (kip)	FZ (kip)	MX (kip-in)	MY (kip-in)	MZ (kip-in)
Case 32 (C)	B|ASCE(2.3.2.3)WY					
Sum of val.	-0.00000	2.11357	25.88931	-228.26596	-0.00000	-0.00000
Sum of reac.	-0.00000	2.11357	25.88931	-270.69105	-0.00000	0.00000
Sum of forc.	0.00000	-2.11357	-25.88931	270.69105	0.00000	-0.00000
Check val.	-0.00000	-0.00000	0.00000	0.00000	-0.00000	0.00000
Precision	1.20453e-013	-2.46654e-016				
Case 33 (C)	B|ASCE(2.3.2.4)WX					
Sum of val.	-4.22114	0.00000	-6.20114	-0.00000	-455.88331	0.00000
Sum of reac.	-4.22114	0.00000	-6.20114	-0.00000	-540.25648	0.00000
Sum of forc.	4.22114	-0.00000	6.20114	0.00000	540.25648	-0.00000
Check val.	0.00000	0.00000	-0.00000	-0.00000	0.00000	0.00000
Precision	2.50303e-013	1.26459e-016				
Case 34 (C)	B|ASCE(2.3.2.4)WY					
Sum of val.	-0.00000	4.22715	-6.20114	-456.53192	-0.00000	-0.00000
Sum of reac.	-0.00000	4.22715	-6.20114	-541.38211	-0.00000	0.00000
Sum of forc.	0.00000	-4.22715	6.20114	541.38211	0.00000	-0.00000
Check val.	-0.00000	-0.00000	0.00000	0.00000	-0.00000	0.00000
Precision	1.24772e-013	1.26459e-016				
Case 35 (C)	B|ASCE(2.3.2.5)EX					
Sum of val.	-1.94409	0.00000	11.69190	-0.00000	-209.85044	0.00000
Sum of reac.	-1.94409	0.00000	11.69190	-0.00000	-248.35820	0.00000
Sum of forc.	1.94409	0.00000	-11.69190	-0.00000	248.35820	-0.00000
Check val.	0.00000	0.00000	0.00000	-0.00000	0.00000	0.00000
Precision	1.25910e-013	-8.15816e-017				
Case 36 (C)	B|ASCE(2.3.2.5)EY					
Sum of val.	0.00000	-1.94409	11.69190	209.85044	0.00000	0.00000
Sum of reac.	0.00000	-1.94409	11.69190	248.35820	0.00000	-0.00000
Sum of forc.	-0.00000	1.94409	-11.69190	-248.35820	0.00000	-0.00000
Check val.	0.00000	0.00000	0.00000	-0.00000	0.00000	-0.00000
Precision	1.25388e-013	-8.15816e-017				

Node/Case	FX (kip)	FY (kip)	FZ (kip)	MX (kip-in)	MY (kip-in)	MZ (kip-in)
Case 37 (C)	B|ASCE(2.3.2.6)WX					
Sum of val.	-4.22114	0.00000	-17.45593	-0.00000	-455.88331	0.00000
Sum of reac.	-4.22114	0.00000	-17.45593	-0.00000	-540.25648	0.00000
Sum of forc.	4.22114	-0.00000	17.45593	0.00000	540.25648	-0.00000
Check val.	0.00000	0.00000	-0.00000	-0.00000	0.00000	0.00000
Precision	2.20880e-013	2.43728e-016				
Case 38 (C)	B|ASCE(2.3.2.6)WY					
Sum of val.	-0.00000	4.22715	-17.45593	-456.53192	-0.00000	-0.00000
Sum of reac.	-0.00000	4.22715	-17.45593	-541.38211	-0.00000	0.00000
Sum of forc.	0.00000	-4.22715	17.45593	541.38211	0.00000	-0.00000
Check val.	-0.00000	-0.00000	0.00000	0.00000	-0.00000	0.00000
Precision	9.53491e-014	2.43728e-016				
Case 39 (C)	B|ASCE(2.3.2.7)EX					
Sum of val.	-1.94409	0.00000	5.99165	-0.00000	-209.85044	0.00000
Sum of reac.	-1.94409	0.00000	5.99165	-0.00000	-248.35820	0.00000
Sum of forc.	1.94409	0.00000	-5.99165	-0.00000	248.35820	-0.00000
Check val.	0.00000	0.00000	0.00000	-0.00000	0.00000	0.00000
Precision	9.58183e-014	-2.88951e-017				
Case 40 (C)	B|ASCE(2.3.2.7)EY					
Sum of val.	0.00000	-1.94409	5.99165	209.85044	0.00000	0.00000
Sum of reac.	0.00000	-1.94409	5.99165	248.35820	0.00000	-0.00000
Sum of forc.	-0.00000	1.94409	-5.99165	-248.35820	0.00000	-0.00000
Check val.	0.00000	0.00000	-0.00000	-0.00000	0.00000	-0.00000
Precision	9.52968e-014	-2.88951e-017				

forces: values

- Cases: 1to48

Bar/Node/Case	FX (kip)	FY (kip)	FZ (kip)	MX (kip-in)	MY (kip-in)	MZ (kip-in)
1/ 1/ 1	0.48501	0.00000	0.00003	-0.00000	-0.18011	0.00000
1/ 1/ 2	-115.71968	-0.00000	-0.30170	-0.00000	54.10597	-0.00000
1/ 1/ 3	-115.71968	-0.00000	-0.30170	-0.00000	54.10597	-0.00000
1/ 1/ 4	-115.71968	-0.00000	-0.30170	-0.00000	54.10597	-0.00000
1/ 1/ 5	4.22363	4.19696	10.15180	0.00000	-1096.39403	453.27175
1/ 1/ 6	-4.11379	10.47014	-3.96707	0.00000	428.44372	1130.77468
1/ 1/ 7	9.74622	-106.80566	44.32766	-19.88401	-4784.85051	-11528.88826
1/ 1/ 8	23.52945	44.24035	107.01643	8.23623	-11551.65099	4775.42188
1/ 1/ 9 (C)	0.83217	0.00003	0.00093	-0.00000	-0.34243	0.00000
1/ 1/ 10 (C)	2.31439	0.00000	0.00603	0.00000	-1.08212	0.00000
1/ 1/ 11 (C)	-1.70771	0.12335	0.29359	0.00000	-31.36652	13.32166
1/ 1/ 12 (C)	-1.95275	0.30772	-0.12137	0.00000	13.44846	33.23347
1/ 1/ 13 (C)	0.04941	0.09290	0.22473	0.01730	-24.25847	10.02839
1/ 1/ 14 (C)	0.02047	-0.22429	0.09309	-0.04176	-10.04819	-24.21067
1/ 1/ 15 (C)	0.83217	0.00003	0.00093	-0.00000	-0.34243	0.00000
1/ 1/ 16 (C)	3.14657	0.00000	0.00697	0.00000	-1.42455	0.00000
1/ 1/ 17 (C)	-0.87554	0.12335	0.29452	0.00000	-31.70895	13.32166
1/ 1/ 18 (C)	-1.12057	0.30772	-0.12044	0.00000	13.10603	33.23347
1/ 1/ 19 (C)	0.88159	0.09290	0.22567	0.01730	-24.60090	10.02839
1/ 1/ 20 (C)	0.85264	-0.22429	0.09402	-0.04176	-10.39062	-24.21067
1/ 1/ 21 (C)	1.28719	0.09251	0.22565	0.00000	-24.67891	9.99124
1/ 1/ 22 (C)	1.10341	0.23079	-0.08557	0.00000	8.93232	24.92510
1/ 1/ 23 (C)	2.59391	0.04877	0.12344	0.00908	-13.88971	5.26490
1/ 1/ 24 (C)	2.57871	-0.11775	0.05433	-0.02192	-6.42932	-12.71060
1/ 1/ 25 (C)	-1.20841	0.12335	0.29414	0.00000	-31.57198	13.32166
1/ 1/ 26 (C)	-1.45344	0.30772	-0.12081	0.00000	13.24300	33.23347
1/ 1/ 27 (C)	0.53389	0.06503	0.15787	0.01211	-17.18638	7.01987
1/ 1/ 28 (C)	0.51363	-0.15700	0.06572	-0.02923	-7.23919	-16.94747
1/ 1/ 29 (C)	1.16504	0.00000	0.00130	-0.00000	-0.47940	0.00000
1/ 1/ 30 (C)	2.15581	0.00000	0.00414	0.00000	-0.95198	0.00000
1/ 1/ 31 (C)	3.33547	0.09868	0.24564	0.00000	-27.23553	10.65733
1/ 1/ 32 (C)	3.13944	0.24617	-0.08632	0.00000	8.61646	26.58677
1/ 1/ 33 (C)	-0.57853	0.19736	0.47387	0.00000	-51.13841	21.31465
1/ 1/ 34 (C)	-0.98859	0.49235	-0.19005	0.00000	20.56556	53.17355
1/ 1/ 35 (C)	1.51090	0.09290	0.22706	0.01730	-24.88581	10.02839
1/ 1/ 36 (C)	1.48195	-0.22429	0.09541	-0.04176	-10.67553	-24.21067
1/ 1/ 37 (C)	-1.98330	0.19736	0.47056	0.00000	-50.49462	21.31465
1/ 1/ 38 (C)	-2.37544	0.49235	-0.19335	0.00000	21.20935	53.17355
1/ 1/ 39 (C)	0.79837	0.09290	0.22557	0.01730	-24.56665	10.02839
1/ 1/ 40 (C)	0.76942	-0.22429	0.09393	-0.04176	-10.35637	-24.21067
1/ 17/ 1	0.38426	0.00000	0.00003	-0.00000	-0.17720	-0.00000
1/ 17/ 2	-115.71968	-0.00000	-0.30170	-0.00000	21.52230	0.00000
1/ 17/ 3	-115.71968	0.00000	-0.30170	-0.00000	21.52230	0.00000
1/ 17/ 4	-115.71968	-0.00000	-0.30170	0.00000	21.52230	0.00000
1/ 17/ 5	4.22363	4.19696	10.15180	0.00000	0.00000	-0.00000
1/ 17/ 6	-4.11379	10.47014	-3.96707	0.00000	0.00000	-0.00000
1/ 17/ 7	9.74622	-106.80566	44.32766	-19.88401	2.53643	6.12348
1/ 17/ 8	23.52945	44.24035	107.01643	8.23623	6.12348	-2.53643
1/ 17/ 9 (C)	0.73142	0.00000	0.00093	-0.00000	-0.24177	-0.00000
1/ 17/ 10 (C)	2.31439	0.00000	0.00603	0.00000	-0.43045	-0.00000
1/ 17/ 11 (C)	-1.70771	0.12335	0.29359	0.00000	0.34070	0.00000
1/ 17/ 12 (C)	-1.95275	0.30772	-0.12137	0.00000	0.34070	0.00000
1/ 17/ 13 (C)	0.04941	0.09290	0.22473	0.01730	0.01286	-0.00533
1/ 17/ 14 (C)	0.02047	-0.22429	0.09309	-0.04176	0.00533	0.01286
1/ 17/ 15 (C)	0.73142	0.00000	0.00093	-0.00000	-0.24177	-0.00000
1/ 17/ 16 (C)	3.04581	0.00000	0.00697	0.00000	-0.67221	-0.00000
1/ 17/ 17 (C)	-0.97629	0.12335	0.29452	0.00000	0.09893	0.00000
1/ 17/ 18 (C)	-1.22133	0.30772	-0.12044	0.00000	0.09893	0.00000
1/ 17/ 19 (C)	0.78083	0.09290	0.22567	0.01730	-0.22891	-0.00533
1/ 17/ 20 (C)	0.75188	-0.22429	0.09402	-0.04176	-0.23644	0.01286
1/ 17/ 21 (C)	1.18643	0.09251	0.22565	0.00000	-0.30908	-0.00000
1/ 17/ 22 (C)	1.00265	0.23079	-0.08557	0.00000	-0.30908	-0.00000
1/ 17/ 23 (C)	2.49315	0.04877	0.12344	0.00908	-0.55785	-0.00280
1/ 17/ 24 (C)	2.47796	-0.11775	0.05433	-0.02192	-0.56180	0.00675
1/ 17/ 25 (C)	-1.26886	0.12335	0.29414	0.00000	0.19564	0.00000
1/ 17/ 26 (C)	-1.51390	0.30772	-0.12081	0.00000	0.19564	0.00000
1/ 17/ 27 (C)	0.47344	0.06503	0.15787	0.01211	-0.13606	-0.00373
1/ 17/ 28 (C)	0.45318	-0.15700	0.06572	-0.02923	-0.14133	0.00900
1/ 17/ 29 (C)	1.02398	0.00000	0.00130	-0.00000	-0.33847	-0.00000
1/ 17/ 30 (C)	2.03490	0.00000	0.00414	0.00000	-0.50534	-0.00000
1/ 17/ 31 (C)	3.21456	0.09868	0.24564	0.00000	-0.70628	-0.00000
1/ 17/ 32 (C)	3.01853	0.24617	-0.08632	0.00000	-0.70628	-0.00000
1/ 17/ 33 (C)	-0.69744	0.19736	0.47387	0.00000	0.03977	0.00000
1/ 17/ 34 (C)	-1.08950	0.49235	-0.19005	0.00000	0.03977	0.00000
1/ 17/ 35 (C)	1.38999	0.09290	0.22706	0.01730	-0.36335	-0.00533
1/ 17/ 36 (C)	1.36105	-0.22429	0.09541	-0.04176	-0.37088	0.01286
1/ 17/ 37 (C)	-2.07406	0.19736	0.47058	0.00000	0.32753	0.00000
1/ 17/ 38 (C)	-2.46612	0.49235	-0.19335	0.00000	0.32753	0.00000
1/ 17/ 39 (C)	0.70769	0.09290	0.22557	0.01730	-0.20473	-0.00533
1/ 17/ 40 (C)	0.67874	-0.22429	0.09393	-0.04176	-0.21226	0.01286
2/ 2/ 1	0.48501	-0.00000	0.00003	0.00000	-0.18011	-0.00000
2/ 2/ 2	-115.71968	0.00000	-0.30170	-0.00000	54.10597	0.00000
2/ 2/ 3	-115.71968	0.00000	-0.30170	-0.00000	54.10597	0.00000
2/ 2/ 4	-115.71968	0.00000	-0.33170	-0.00000	54.10597	0.00000
2/ 2/ 5	-0.45674	10.23828	4.45039	-0.00000	-480.64186	1105.73407
2/ 2/ 6	0.32849	4.42020	-10.69922	-0.00000	1155.51582	477.38112
2/ 2/ 7	23.52945	-44.24035	107.01643	-8.23623	-11551.65099	-4775.42188
2/ 2/ 8	9.74622	106.80566	44.32766	19.88401	-4784.85051	11528.88826
2/ 2/ 9 (C)	0.83217	-0.00000	0.00093	0.00000	-0.34243	-0.00000
2/ 2/ 10 (C)	2.31439	-0.00000	0.00603	0.00000	-1.08212	-0.00000
2/ 2/ 11 (C)	-1.84527	0.30090	0.12602	-0.00000	-13.26957	32.49752
2/ 2/ 12 (C)	-1.82219	0.12991	-0.31923	-0.00000	34.81711	14.03023
2/ 2/ 13 (C)	0.02047	0.22429	0.09309	0.04176	-10.04819	24.21067
2/ 2/ 14 (C)	0.04941	-0.09290	0.22473	-0.01730	-24.25847	-10.02839
2/ 2/ 15 (C)	0.83217	-0.00000	0.00093	0.00000	-0.34243	-0.00000
2/ 2/ 16 (C)	3.14657	-0.00000	0.00697	0.00000	-1.42455	-0.00000
2/ 2/ 17 (C)	-1.01309	0.30090	0.12695	-0.00000	-13.61200	32.49752
2/ 2/ 18 (C)	-0.99001	0.12991	-0.31829	-0.00000	34.47468	14.03023
2/ 2/ 19 (C)	0.85264	0.22429	0.09402	0.04176	-10.39062	24.21067
2/ 2/ 20 (C)	0.88159	-0.09290	0.22567	-0.01730	-24.60090	-10.02839
2/ 2/ 21 (C)	1.18402	0.22568	0.09997	-0.00000	-11.10619	24.37314
2/ 2/ 22 (C)	1.20133	0.09743	-0.23396	-0.00000	24.95881	10.52267
2/ 2/ 23 (C)	2.57871	0.11775	0.05433	0.02192	-6.42932	12.71060
2/ 2/ 24 (C)	2.59391	-0.04877	0.12344	-0.00908	-13.88971	-5.26490
2/ 2/ 25 (C)	-1.34596	0.30090	0.12658	-0.00000	-13.47502	32.49752
2/ 2/ 26 (C)	-1.32288	0.12991	-0.31867	-0.00000	34.61165	14.03023
2/ 2/ 27 (C)	0.51363	0.15700	0.06572	0.02923	-7.23919	16.94747
2/ 2/ 28 (C)	0.53389	-0.06503	0.15787	-0.01211	-17.18638	-7.01987
2/ 2/ 29 (C)	1.16504	-0.00000	0.00130	0.00000	-0.47940	-0.00000
2/ 2/ 30 (C)	2.15581	-0.00000	0.00414	0.00000	-0.95198	-0.00000
2/ 2/ 31 (C)	3.22543	0.24072	0.11159	-0.00000	-12.75796	25.99802
2/ 2/ 32 (C)	3.24389	0.10393	-0.24461	-0.00000	25.71138	11.22418
2/ 2/ 33 (C)	-0.79662	0.48144	0.20577	-0.00000	-22.18328	51.99604
2/ 2/ 34 (C)	-0.75970	0.20786	-0.50663	-0.00000	54.75540	22.44837
2/ 2/ 35 (C)	1.48195	0.22429	0.09541	0.04176	-10.67553	24.21067
2/ 2/ 36 (C)	1.51090	-0.09290	0.22706	-0.01730	-24.88581	-10.02839
2/ 2/ 37 (C)	-2.20347	0.48144	0.20247	-0.00000	-21.53949	51.99604
2/ 2/ 38 (C)	-2.16654	0.20786	-0.50992	-0.00000	55.39919	22.44837
2/ 2/ 39 (C)	0.76942	0.22429	0.09393	0.04176	-10.35637	24.21067
2/ 2/ 40 (C)	0.79837	-0.09290	0.22557	-0.01730	-24.56665	-10.02839
2/ 18/ 1	0.38426	-0.00000	0.00003	0.00000	-0.17720	0.00000
2/ 18/ 2	-115.71968	0.00000	-0.30170	-0.00000	21.52230	-0.00000
2/ 18/ 3	-115.71968	0.00000	-0.30170	-0.00000	21.52230	-0.00000
2/ 18/ 4	-115.71968	0.00000	-0.30170	-0.00000	21.52230	-0.00000
2/ 18/ 5	-0.45674	10.23828	4.45039	-0.00000	0.00000	0.00000
2/ 18/ 6	0.32849	4.42020	-10.69922	-0.00000	0.00000	0.00000
2/ 18/ 7	23.52945	-44.24035	107.01643	-8.23623	6.12348	2.53643
2/ 18/ 8	9.74622	106.80566	44.32766	19.88401	2.53643	-6.12348
2/ 18/ 9 (C)	0.73142	-0.00000	0.00093	0.00000	-0.24177	0.00000
2/ 18/ 10 (C)	2.31439	-0.00000	0.00603	0.00000	-0.43045	0.00000
2/ 18/ 11 (C)	-1.84527	0.30090	0.12602	-0.00000	0.34070	-0.00000
2/ 18/ 12 (C)	-1.82219	0.12991	-0.31923	-0.00000	0.34070	-0.00000
2/ 18/ 13 (C)	0.02047	0.22429	0.09309	0.04176	0.00533	-0.01286
2/ 18/ 14 (C)	0.04941	-0.09290	0.22473	-0.01730	0.01286	0.00533
2/ 18/ 15 (C)	0.73142	-0.00000	0.00093	0.00000	-0.24177	0.00000
2/ 18/ 16 (C)	3.04581	-0.00000	0.00697	0.00000	-0.67221	0.00000
2/ 18/ 17 (C)	-1.11385	0.30090	0.12695	-0.00000	0.09893	-0.00000
2/ 18/ 18 (C)	-1.09077	0.12991	-0.31829	-0.00000	0.09893	-0.00000
2/ 18/ 19 (C)	0.75188	0.22429	0.09402	0.04176	-0.23644	-0.01286
2/ 18/ 20 (C)	0.78083	-0.09290	0.22567	-0.01730	-0.22891	0.00533
2/ 18/ 21 (C)	1.08326	0.22568	0.09997	-0.00000	-0.30908	0.00000

Bar/Node/Case			FX (kip)	FY (kip)	FZ (kip)	MX (kip-in)	MY (kip-in)	MZ (kip-in)
2/	18/	22 (C)	1.10057	0.09743	-0.23396	-0.00000	-0.30908	0.00000
2/	18/	23 (C)	2.47796	0.11775	0.05433	0.02192	-0.56180	-0.00675
2/	18/	24 (C)	2.49315	-0.04877	0.12344	-0.00908	-0.55785	0.00280
2/	18/	25 (C)	-1.40842	0.30090	0.12658	-0.00000	0.19564	-0.00000
2/	18/	26 (C)	-1.38334	0.12991	-0.31867	-0.00000	0.19564	-0.00000
2/	18/	27 (C)	0.45318	0.15700	0.06572	0.02923	-0.14133	-0.00900
2/	18/	28 (C)	0.47344	-0.06503	0.15787	-0.01211	-0.13606	0.00373
2/	18/	29 (C)	1.02398	-0.00000	0.00130	0.00000	-0.33847	0.00000
2/	18/	30 (C)	2.03490	-0.00000	0.00414	0.00000	-0.50534	0.00000
2/	18/	31 (C)	3.10452	0.24073	0.11158	-0.00000	-0.70628	0.00000
2/	18/	32 (C)	3.12298	0.10393	-0.24461	-0.00000	-0.70628	0.00000
2/	18/	33 (C)	-0.91753	0.48144	0.20577	-0.00000	0.03977	-0.00000
2/	18/	34 (C)	-0.88060	0.20788	-0.50863	-0.00000	0.03977	-0.00000
2/	18/	35 (C)	1.35105	0.22429	0.09541	0.04176	-0.37088	-0.01286
2/	18/	36 (C)	1.38999	-0.09290	0.22706	-0.01730	-0.36335	0.00533
2/	18/	37 (C)	-2.29415	0.48144	0.20247	-0.00000	0.32753	-0.00000
2/	18/	38 (C)	-2.25723	0.20788	-0.50992	-0.00000	0.32753	-0.00000
2/	18/	39 (C)	0.67874	0.22429	0.09393	0.04176	-0.21228	-0.01286
2/	18/	40 (C)	0.70789	-0.09290	0.22557	-0.01730	-0.20473	0.00533
3/	3/	1	0.48501	0.00000	0.00003	0.00000	-0.18011	0.00000
3/	3/	2	-115.71968	-0.00000	-0.30170	-0.00000	54.10597	-0.00000
3/	3/	3	-115.71968	-0.00000	-0.30170	-0.00000	54.10597	-0.00000
3/	3/	4	-115.71968	-0.00000	-0.30170	-0.00000	54.10597	-0.00000
3/	3/	5	-4.10840	10.45542	-3.96095	0.00000	427.78261	1129.18495
3/	3/	6	0.32849	-4.42020	-10.69922	-0.00000	1155.51582	-477.36112
3/	3/	7	23.52945	44.24035	107.01843	8.23623	-11551.65099	4775.42188
3/	3/	8	-9.74622	106.80566	-44.32766	19.88401	-4784.85051	11528.88826
3/	3/	9 (C)	0.83217	0.00000	0.00093	0.00000	-0.34243	0.00000
3/	3/	10 (C)	2.31439	0.00000	0.00603	0.00000	-1.08212	0.00000
3/	3/	11 (C)	-1.95259	0.30728	-0.12119	0.00000	13.42903	33.18875
3/	3/	12 (C)	-1.82219	-0.12991	-0.31923	-0.00000	34.81711	-14.03023
3/	3/	13 (C)	-0.02047	0.22429	-0.09309	0.04176	10.04819	24.21067
3/	3/	14 (C)	0.04941	0.09290	0.22473	0.01730	-24.25847	10.02839
3/	3/	15 (C)	0.83217	0.00000	0.00093	0.00000	-0.34243	0.00000
3/	3/	16 (C)	3.14657	0.00000	0.00697	0.00000	-1.42455	0.00000
3/	3/	17 (C)	-1.12041	0.30728	-0.12026	0.00000	13.08560	33.18875

Bar/Node/Case			FX (kip)	FY (kip)	FZ (kip)	MX (kip-in)	MY (kip-in)	MZ (kip-in)
3/	3/	18 (C)	-0.99001	-0.12991	-0.31829	-0.00000	34.47468	-14.03023
3/	3/	19 (C)	0.81171	0.22429	-0.09216	0.04176	9.70576	24.21067
3/	3/	20 (C)	0.88159	0.09290	0.22567	0.01730	-24.60090	10.02839
3/	3/	21 (C)	1.10353	0.23046	-0.08543	0.00000	8.91775	24.89006
3/	3/	22 (C)	1.20133	-0.09743	-0.23396	-0.00000	24.95881	-10.52267
3/	3/	23 (C)	2.55722	0.11775	-0.04341	0.02192	4.12128	12.71060
3/	3/	24 (C)	2.59391	0.04877	0.12344	0.00908	-13.8897	5.26490
3/	3/	25 (C)	-1.45328	0.30728	-0.12063	0.00000	13.22257	33.18675
3/	3/	26 (C)	-1.32288	-0.12991	-0.31867	-0.00000	34.51165	-14.03023
3/	3/	27 (C)	0.48498	0.15700	-0.06460	0.02923	6.82827	16.94747
3/	3/	28 (C)	0.52389	0.06503	0.15787	0.01211	-17.18638	7.01987
3/	3/	29 (C)	1.16504	0.00000	0.00130	0.00000	-0.47940	0.00000
3/	3/	30 (C)	2.15581	0.00000	0.00414	0.00000	-0.95198	0.00000
3/	3/	31 (C)	3.13957	0.24583	-0.08918	0.00000	8.90092	26.54940
3/	3/	32 (C)	3.24399	-0.10393	-0.24461	-0.00000	25.71138	-11.22418
3/	3/	33 (C)	-0.96834	0.49166	-0.18977	0.00000	20.53447	53.09879
3/	3/	34 (C)	-0.75970	-0.20786	-0.50863	-0.00000	54.75549	-22.44837
3/	3/	35 (C)	1.44102	0.22429	-0.09276	0.04176	9.42085	24.21067
3/	3/	36 (C)	1.51090	0.09290	0.22706	0.01730	-24.86581	10.02839
3/	3/	37 (C)	-2.37519	0.49166	-0.19306	0.00000	21.17826	53.09879
3/	3/	38 (C)	-2.16554	-0.20786	-0.50992	-0.00000	55.39919	-22.44837
3/	3/	39 (C)	0.72849	0.22429	-0.09225	0.04176	9.74000	24.21067
3/	3/	40 (C)	0.79837	0.09290	0.22557	0.01730	-24.56665	10.02839
3/	19/	1	0.36426	0.00000	0.00003	0.00000	-0.17720	-0.00000
3/	19/	2	-115.71968	-0.00000	-0.30170	-0.00000	21.52230	0.00000
3/	19/	3	-115.71968	-0.00000	-0.30170	-0.00000	21.52230	0.00000
3/	19/	4	-115.71968	-0.00000	-0.30170	-0.00000	21.52230	0.00000
3/	19/	5	-4.10840	10.45542	-3.96095	0.00000	-0.00000	-0.00000
3/	19/	6	0.32849	-4.42020	-10.69922	-0.00000	-0.00000	0.00000
3/	19/	7	23.52945	44.24035	107.01843	8.23623	6.12348	-2.53643
3/	19/	8	-9.74622	106.80566	-44.32766	19.88401	-2.53643	-6.12348
3/	19/	9 (C)	0.73142	0.00000	0.00093	0.00000	-0.24177	-0.00000
3/	19/	10 (C)	2.31439	0.00000	0.00603	0.00000	-0.43045	-0.00000
3/	19/	11 (C)	-1.95259	0.30728	-0.12119	0.00000	0.34070	0.00000
3/	19/	12 (C)	-1.82219	-0.12991	-0.31923	-0.00000	0.34070	0.00000
3/	19/	13 (C)	-0.02047	0.22429	-0.09309	0.04176	-0.00533	-0.01286

Bar/Node/Case			FX (kip)	FY (kip)	FZ (kip)	MX (kip-in)	MY (kip-in)	MZ (kip-in)
3/	19/	14 (C)	0.04941	0.09290	0.22473	0.01730	0.01286	-0.00533
3/	19/	15 (C)	0.73142	0.00000	0.00093	0.00000	-0.24177	-0.00000
3/	19/	16 (C)	3.04581	0.00000	0.00697	0.00000	-0.67271	-0.00000
3/	19/	17 (C)	1.22117	0.30728	0.12026	0.00000	0.09893	0.00000
3/	19/	18 (C)	-1.09077	-0.12991	-0.31829	-0.00000	0.09893	0.00000
3/	19/	19 (C)	0.71065	0.22429	-0.09216	0.04176	-0.24709	-0.01286
3/	19/	20 (C)	0.78083	0.09290	0.22567	0.01730	-0.22861	-0.00533
3/	19/	21 (C)	1.00277	0.23046	-0.08543	0.00000	-0.30908	-0.00000
3/	19/	22 (C)	1.10057	-0.09743	-0.23396	-0.00000	-0.30908	-0.00000
3/	19/	23 (C)	2.45647	0.11775	-0.04341	0.02192	-0.56740	-0.00675
3/	19/	24 (C)	2.49315	0.04877	0.12344	0.00908	-0.55785	-0.00280
3/	19/	25 (C)	-1.51374	0.30728	-0.12063	0.00000	0.19564	0.00000
3/	19/	26 (C)	-1.38334	-0.12991	-0.31867	-0.00000	0.19564	0.00000
3/	19/	27 (C)	0.42452	0.15700	-0.06460	0.02923	-0.14979	-0.00900
3/	19/	28 (C)	0.47344	0.06503	0.15787	0.01211	-0.13606	-0.00373
3/	19/	29 (C)	1.02398	0.00000	0.00130	0.00000	-0.33847	-0.00000
3/	19/	30 (C)	2.03490	0.00000	0.00414	0.00000	-0.50534	-0.00000
3/	19/	31 (C)	3.01866	0.24583	-0.08918	0.00000	-0.70628	-0.00000
3/	19/	32 (C)	3.12298	-0.10393	-0.24461	-0.00000	-0.70628	-0.00000
3/	19/	33 (C)	-1.08924	0.49166	-0.18977	0.00000	0.03977	0.00000
3/	19/	34 (C)	-0.88060	-0.20786	-0.50863	-0.00000	0.03977	0.00000
3/	19/	35 (C)	1.32011	0.22429	-0.09276	0.04176	-0.38154	-0.01286
3/	19/	36 (C)	1.38999	0.09290	0.22706	0.01730	-0.36335	-0.00533
3/	19/	37 (C)	-2.46567	0.49166	-0.19306	0.00000	0.32753	0.00000
3/	19/	38 (C)	-2.25723	-0.20786	-0.50992	-0.00000	0.32753	0.00000
3/	19/	39 (C)	0.63781	0.22429	-0.09225	0.04176	-0.22292	-0.01286
3/	19/	40 (C)	0.70789	0.09290	0.22557	0.01730	-0.20473	-0.00533
4/	4/	1	0.48501	-0.00000	0.00003	-0.00000	-0.18011	-0.00000
4/	4/	2	-115.71968	0.00000	-0.30170	0.00000	54.10597	0.00000
4/	4/	3	-115.71968	0.00000	-0.30170	0.00000	54.10597	0.00000
4/	4/	4	-115.71968	0.00000	-0.30170	0.00000	54.10597	0.00000
4/	4/	5	0.34150	4.41410	-10.68444	0.00000	1153.91977	476.72283
4/	4/	6	-4.11379	-10.47014	-3.96707	-0.00000	428.44372	-1130.77468
4/	4/	7	9.74622	106.80566	44.32766	19.88401	-4784.85051	11528.88826
4/	4/	8	-23.52945	44.24035	-107.01843	8.23623	11551.65099	4775.42188
4/	4/	9 (C)	0.83217	-0.00000	0.00093	-0.00000	-0.34243	-0.00000

Bar/Node/Case			FX (kip)	FY (kip)	FZ (kip)	MX (kip-in)	MY (kip-in)	MZ (kip-in)
4/	4/	10 (C)	2.31439	-0.00000	0.00603	-0.00000	-1.08212	-0.00000
4/	4/	11 (C)	-1.82181	0.12973	-0.31879	0.00000	34.77020	14.01088
4/	4/	12 (C)	-1.95275	-0.30772	-0.12137	-0.00000	13.44846	-33.23347
4/	4/	13 (C)	-0.04941	0.09290	0.22473	0.01730	24.25847	10.02839
4/	4/	14 (C)	0.02047	0.22429	0.09309	0.04176	-10.04819	24.21067
4/	4/	15 (C)	0.83217	-0.00000	0.00093	-0.00000	-0.34243	-0.00000
4/	4/	16 (C)	3.14657	-0.00000	0.00697	-0.00000	-1.42455	-0.00000
4/	4/	17 (C)	-0.98963	0.12973	-0.31786	0.00000	34.42777	14.01088
4/	4/	18 (C)	-1.12057	-0.30772	-0.12044	-0.00000	13.10603	-33.23347
4/	4/	19 (C)	0.78276	0.09290	0.22398	0.01730	23.91604	10.02839
4/	4/	20 (C)	0.85264	0.22429	0.09402	0.04176	-10.39062	24.21067
4/	4/	21 (C)	1.20161	0.09730	-0.23364	0.00000	24.92263	10.50816
4/	4/	22 (C)	1.10341	-0.28076	0.08557	-0.00000	9.93232	-24.92510
4/	4/	23 (C)	2.54203	0.04877	-0.11253	0.00908	11.58166	5.26490
4/	4/	24 (C)	2.57871	0.11775	0.05433	0.02192	-5.42932	12.71060
4/	4/	25 (C)	-1.32250	0.12973	-0.31823	0.00000	34.56474	14.01088
4/	4/	26 (C)	-1.45344	-0.30772	-0.12081	-0.00000	13.34300	-33.23347
4/	4/	27 (C)	0.48473	0.06503	0.15675	0.01211	16.77547	7.01987
4/	4/	28 (C)	0.51363	0.15700	0.06572	0.02923	-7.23819	16.94747
4/	4/	29 (C)	1.16504	-0.00000	0.00130	-0.00000	-0.47940	-0.00000
4/	4/	30 (C)	2.15581	-0.00000	0.00414	-0.00000	-0.95198	-0.00000
4/	4/	31 (C)	3.24419	0.10378	-0.34426	0.00000	25.67385	11.20870
4/	4/	32 (C)	3.13944	-0.24817	-0.08632	-0.00000	8.61646	-26.58877
4/	4/	33 (C)	-0.75908	0.20757	-0.50593	0.00000	54.68034	22.41740
4/	4/	34 (C)	-0.96859	-0.49235	-0.19005	-0.00000	20.56556	-53.17355
4/	4/	35 (C)	1.41208	0.09290	-0.22241	0.01730	23.63113	10.02839
4/	4/	36 (C)	1.48195	0.22429	0.09541	0.04176	10.67553	24.21067
4/	4/	37 (C)	-2.16593	0.20757	-0.50923	0.00000	55.32413	22.41740
4/	4/	38 (C)	-2.37544	-0.49235	-0.19335	-0.00000	21.20935	-53.17355
4/	4/	39 (C)	0.69954	0.09290	-0.22390	0.01730	23.95028	10.02839
4/	4/	40 (C)	0.76942	0.22429	0.09393	0.04176	-10.35637	24.21067
4/	20/	1	0.38426	-0.00000	0.00003	-0.00000	-0.17720	0.00000
4/	20/	2	-115.71968	0.00000	-0.30170	0.00000	21.52230	-0.00000
4/	20/	3	-115.71968	0.00000	-0.30170	0.00000	21.52230	-0.00000
4/	20/	4	-115.71968	0.00000	-0.30170	0.00000	21.52230	-0.00000
4/	20/	5	0.34150	4.41410	10.68444	0.00000	0.00000	-0.00000

Bar/Node/Case			FX (kip)	FY (kip)	FZ (kip)	MX (kip-in)	MY (kip-in)	MZ (kip-in)
4/	20/	6	-4.11379	-10.47014	-3.96707	-0.00000	0.00000	0.00000
4/	20/	7	9.74622	106.80566	44.32766	19.88401	2.53643	-6.12348
4/	20/	8	-23.52945	44.24035	-107.01643	8.23623	-6.12348	-2.53643
4/	20/	9 (C)	0.73142	-0.00000	0.00093	-0.00000	-0.24177	0.00000
4/	20/	10 (C)	2.31439	0.00000	0.00603	-0.00000	-0.43045	0.00000
4/	20/	11 (C)	-1.82181	0.12973	-0.31879	0.00000	0.34070	-0.00000
4/	20/	12 (C)	-1.95275	-0.30772	-0.12137	-0.00000	0.34070	-0.00000
4/	20/	13 (C)	-0.04941	0.09290	-0.22473	0.01730	-0.01286	-0.00533
4/	20/	14 (C)	0.02047	0.22429	0.09309	0.04176	0.00533	-0.01286
4/	20/	15 (C)	0.73142	-0.00000	0.00093	-0.00000	-0.24177	0.00000
4/	20/	16 (C)	3.04581	-0.00000	0.00697	-0.00000	-0.67221	0.00000
4/	20/	17 (C)	-1.00039	0.12973	-0.31700	0.00000	0.09893	-0.00000
4/	20/	18 (C)	-1.22133	-0.30772	-0.12044	-0.00000	0.09893	-0.00000
4/	20/	19 (C)	0.68201	0.09290	-0.22380	0.01730	-0.25463	-0.00533
4/	20/	20 (C)	0.75188	0.22429	0.09402	0.04176	-0.23644	-0.01286
4/	20/	21 (C)	1.10086	0.09730	-0.23364	0.00000	-0.30908	0.00000
4/	20/	22 (C)	1.00265	-0.23079	-0.08557	-0.00000	-0.30908	0.00000
4/	20/	23 (C)	2.44127	0.04877	-0.11253	0.00908	-0.57135	-0.00280
4/	20/	24 (C)	2.47796	0.11775	0.05433	0.02192	-0.56180	-0.00675
4/	20/	25 (C)	-1.38296	0.12973	-0.31823	0.00000	0.19564	-0.00000
4/	20/	26 (C)	-1.51390	-0.30772	-0.12081	-0.00000	0.19564	-0.00000
4/	20/	27 (C)	0.40426	0.06503	-0.15675	0.01211	-0.15406	-0.00373
4/	20/	28 (C)	0.45318	0.15700	0.06572	0.02923	-0.14133	-0.00900
4/	20/	29 (C)	1.02398	-0.00000	0.00130	-0.00000	-0.33847	0.00000
4/	20/	30 (C)	2.03490	-0.00000	0.00414	-0.00000	-0.50534	0.00000
4/	20/	31 (C)	3.12329	-0.10378	-0.24426	0.00000	-0.70628	0.00000
4/	20/	32 (C)	3.01853	-0.24617	-0.08632	-0.00000	-0.70628	0.00000
4/	20/	33 (C)	-0.87999	0.20757	-0.50593	0.00000	0.03977	-0.00000
4/	20/	34 (C)	-1.08950	-0.49235	-0.19005	-0.00000	0.03977	-0.00000
4/	20/	35 (C)	1.29117	0.09290	-0.22241	0.01730	-0.38907	-0.00533
4/	20/	36 (C)	1.36105	0.22429	0.09541	0.04176	-0.37088	-0.01286
4/	20/	37 (C)	-2.25661	0.20757	-0.50923	0.00000	0.32753	-0.00000
4/	20/	38 (C)	-2.46612	-0.49235	-0.19335	-0.00000	0.32753	-0.00000
4/	20/	39 (C)	0.60886	0.09290	-0.22390	0.01730	-0.23045	-0.00533
4/	20/	40 (C)	0.67874	0.22429	0.09393	0.04176	-0.21226	-0.01286
5/	5/	1	0.48501	0.00000	0.00003	-0.00000	-0.18011	0.00000

Bar/Node/Case			FX (kip)	FY (kip)	FZ (kip)	MX (kip-in)	MY (kip-in)	MZ (kip-in)
5/	5/	2	-115.71968	-0.00000	-0.30170	0.00000	54.10597	-0.00000
5/	5/	3	-115.71968	-0.00000	-0.30170	0.00000	54.10597	-0.00000
5/	5/	4	-115.71968	-0.00000	-0.30170	0.00000	54.10597	-0.00000
5/	5/	5	0.34150	-4.41410	-10.68444	0.00000	1153.91977	-476.72263
5/	5/	6	-0.45135	-10.25300	4.45651	-0.00000	-481.30299	-1107.32380
5/	5/	7	-9.74622	106.80566	-44.32766	19.88401	4784.85051	11528.88826
5/	5/	8	-23.52945	-44.24035	-107.01643	-8.23623	11551.65099	-4775.42188
5/	5/	9 (C)	0.83217	0.00000	0.00093	-0.00000	-0.34243	0.00000
5/	5/	10 (C)	2.31439	0.00000	0.00603	-0.00000	-1.08212	0.00000
5/	5/	11 (C)	-1.82181	-0.12973	-0.31879	0.00000	34.77020	-14.01088
5/	5/	12 (C)	-1.84511	-0.30134	0.12620	-0.00000	-13.28900	-32.54425
5/	5/	13 (C)	-0.04941	-0.09290	-0.22473	-0.01730	24.25847	-10.02839
5/	5/	14 (C)	-0.02047	0.22429	-0.09309	0.04176	10.04819	24.21067
5/	5/	15 (C)	0.83217	0.00000	0.00093	-0.00000	-0.34243	0.00000
5/	5/	16 (C)	3.14657	0.00000	0.00697	-0.00000	-1.42455	0.00000
5/	5/	17 (C)	-0.98963	-0.12973	-0.31786	0.00000	34.42777	-14.01088
5/	5/	18 (C)	-1.01293	-0.30134	0.12713	-0.00000	-13.63143	-32.54425
5/	5/	19 (C)	0.78276	-0.09290	-0.22380	-0.01730	23.91604	-10.02839
5/	5/	20 (C)	0.81171	0.22429	-0.09216	0.04176	9.70576	24.21067
5/	5/	21 (C)	1.2016	-0.09730	-0.23364	0.00000	24.92363	-10.50816
5/	5/	22 (C)	1.18414	-0.22600	0.10011	-0.00000	-11.12077	-24.40818
5/	5/	23 (C)	2.54203	-0.04877	-0.11253	-0.00908	11.58168	-5.26490
5/	5/	24 (C)	2.55722	0.11775	-0.04341	0.02192	4.12128	12.71060
5/	5/	25 (C)	-1.32250	-0.12973	-0.31823	0.00000	34.56474	-14.01088
5/	5/	26 (C)	-1.34580	-0.30134	0.12676	-0.00000	-13.49445	-32.54425
5/	5/	27 (C)	0.46472	-0.06503	-0.15675	-0.01211	16.77547	-7.01987
5/	5/	28 (C)	0.48498	0.15700	-0.06460	0.02923	6.82827	16.94747
5/	5/	29 (C)	1.16504	0.00000	0.00130	-0.00000	-0.47940	0.00000

Bar/Node/Case			FX (kip)	FY (kip)	FZ (kip)	MX (kip-in)	MY (kip-in)	MZ (kip-in)
5/	5/	30 (C)	2.15581	0.00000	0.00414	-0.00000	-0.95198	0.00000
5/	5/	31 (C)	3.24419	-0.10378	-0.24426	0.00000	25.67385	-11.20870
5/	5/	32 (C)	3.22555	-0.24107	0.11173	-0.00000	-12.77350	-28.03540
5/	5/	33 (C)	-0.75908	-0.20757	-0.50593	0.00000	54.68034	-22.41740
5/	5/	34 (C)	-0.79837	-0.48214	0.20806	-0.00000	-22.21437	-52.07079
5/	5/	35 (C)	1.41208	-0.09290	-0.22241	-0.01730	23.63113	-10.02839
5/	5/	36 (C)	1.44102	0.22429	-0.09076	0.04176	9.42085	24.21067
5/	5/	37 (C)	-2.16593	-0.20757	-0.50923	0.00000	55.32413	-22.41740

Bar/Node/Case			FX (kip)	FY (kip)	FZ (kip)	MX (kip-in)	MY (kip-in)	MZ (kip-in)
5/	5/	38 (C)	-2.20322	-0.48214	0.20276	-0.00000	-21.57058	-52.07079
5/	5/	39 (C)	0.69954	-0.09290	-0.22390	-0.01730	23.95028	-10.02839
5/	5/	40 (C)	0.72849	0.22429	-0.09225	0.04176	9.74000	24.21067
5/	21/	1	0.38426	0.00000	0.00003	-0.00000	-0.17720	-0.00000
5/	21/	2	-115.71968	-0.00000	-0.30173	0.00000	21.52230	0.00000
5/	21/	3	-115.71968	-0.00000	-0.30173	0.00000	21.52230	0.00000
5/	21/	4	-115.71968	-0.00000	-0.30173	0.00000	21.52230	0.00000
5/	21/	5	0.34150	-4.41410	-10.68444	0.00000	-0.00000	-0.00000
5/	21/	6	-0.45135	-10.25300	4.45651	-0.00000	0.00000	0.00000
5/	21/	7	-9.74622	106.80566	-44.32766	19.88401	-2.53643	-6.12348
5/	21/	8	-23.52945	-44.24035	-107.01643	-8.23623	-6.12348	2.53643
5/	21/	9 (C)	0.73142	0.00000	0.00093	-0.00000	-0.24177	-0.00000
5/	21/	10 (C)	2.31439	0.00000	0.00603	-0.00000	-0.43045	-0.00000
5/	21/	11 (C)	-1.82181	-0.12973	-0.31879	0.00000	0.34070	0.00000
5/	21/	12 (C)	-1.84511	-0.30134	0.12620	-0.00000	0.34070	0.00000
5/	21/	13 (C)	-0.04941	-0.09290	-0.22473	-0.01730	-0.01286	0.00533
5/	21/	14 (C)	-0.02047	0.22429	-0.09309	0.04176	-0.00533	-0.01286
5/	21/	15 (C)	0.73142	0.00000	0.00093	-0.00000	-0.24177	-0.00000
5/	21/	16 (C)	3.04581	0.00000	0.00697	-0.00000	-0.67221	-0.00000
5/	21/	17 (C)	-1.00039	-0.12973	-0.31786	0.00000	0.09893	0.00000
5/	21/	18 (C)	-1.11369	-0.30134	0.12713	-0.00000	0.09893	0.00000
5/	21/	19 (C)	0.68201	-0.09290	-0.22380	-0.01730	-0.25463	0.00533
5/	21/	20 (C)	0.71069	0.22429	-0.09216	0.04176	-0.24709	-0.01286
5/	21/	21 (C)	1.10086	-0.09730	-0.23364	0.00000	-0.30908	-0.00000
5/	21/	22 (C)	1.08338	-0.22600	0.10011	-0.00000	-0.30908	-0.00000
5/	21/	23 (C)	2.44127	-0.04877	-0.11253	0.00908	-0.57135	0.00280
5/	21/	24 (C)	2.45647	0.11775	-0.04341	0.02192	-0.56740	-0.00675
5/	21/	25 (C)	-1.38296	-0.12973	-0.31823	0.00000	0.19564	0.00000
5/	21/	26 (C)	-1.40626	-0.30134	0.12676	-0.00000	0.19564	0.00000
5/	21/	27 (C)	0.40426	-0.06503	-0.15675	-0.01211	-0.15406	0.00373
5/	21/	28 (C)	0.42452	0.15700	-0.06460	0.02923	-0.14879	-0.00900
5/	21/	29 (C)	1.02398	0.00000	0.00130	-0.00000	-0.33847	-0.00000
5/	21/	30 (C)	2.03490	0.00000	0.00414	-0.00000	-0.50534	-0.00000
5/	21/	31 (C)	3.12329	-0.10378	-0.24426	0.00000	-0.70628	-0.00000
5/	21/	32 (C)	3.10464	-0.24107	0.11173	-0.00000	-0.70628	-0.00000
5/	21/	33 (C)	-0.87999	-0.20757	-0.50593	0.00000	0.03977	0.00000

Bar/Node/Case			FX (kip)	FY (kip)	FZ (kip)	MX (kip-in)	MY (kip-in)	MZ (kip-in)
5/	21/	34 (C)	-0.91727	-0.48214	0.20806	-0.00000	0.03977	0.00000
5/	21/	35 (C)	1.29117	-0.09290	-0.22241	-0.01730	-0.38907	0.00533
5/	21/	36 (C)	1.32015	0.22429	-0.09076	0.04176	-0.38154	-0.01286
5/	21/	37 (C)	-2.25661	-0.20757	-0.50923	0.00000	0.32753	0.00000
5/	21/	38 (C)	-2.29390	-0.48214	0.20276	-0.00000	0.32753	0.00000
5/	21/	39 (C)	0.60886	-0.09290	-0.22390	-0.01730	-0.23045	0.00533
5/	21/	40 (C)	0.63781	0.22429	-0.09225	0.04176	-0.22292	-0.01286
5/	5/	1	0.48501	-0.00000	0.00003	0.00000	-0.18011	-0.00000
5/	5/	2	-115.71968	0.00000	-0.30170	-0.00000	54.10597	0.00000
5/	5/	3	-115.71968	0.00000	-0.30170	-0.00000	54.10597	0.00000
5/	5/	4	-115.71968	0.00000	-0.30170	-0.00000	54.10597	0.00000
5/	5/	5	-4.10840	-10.45542	-3.95095	-0.00000	427.78281	-1129.18495
5/	5/	6	4.23865	-4.20306	10.15657	0.00000	-1097.99008	-453.99024
5/	5/	7	-23.52945	44.24035	-107.01643	8.23623	11551.65099	4775.42188
5/	5/	8	-9.74622	-106.80566	-44.32766	-19.88401	4784.85051	-11528.88826
5/	5/	9 (C)	0.83217	-0.00000	0.00093	0.00000	-0.34243	-0.00000
5/	5/	10 (C)	2.31439	-0.00000	0.00603	0.00000	-1.08212	-0.00000
5/	5/	11 (C)	-1.96259	-0.30728	-0.12119	-0.00000	13.42300	-33.18675
5/	5/	12 (C)	-1.70733	-0.12353	0.29402	0.00000	-31.41343	-13.34101
5/	5/	13 (C)	-0.02047	-0.22429	-0.09309	-0.04176	10.04819	-24.21067
5/	5/	14 (C)	-0.04941	0.09290	-0.22473	0.01730	24.25847	10.02839
5/	5/	15 (C)	0.83217	-0.00000	0.00093	0.00000	-0.34243	-0.00000
5/	5/	16 (C)	3.14657	-0.00000	0.00697	0.00000	-1.42455	-0.00000
5/	5/	17 (C)	-1.12041	-0.30728	-0.12026	-0.00000	13.08660	-33.18675
5/	5/	18 (C)	-0.87515	-0.12353	0.29495	0.00000	-31.75586	-13.34101
5/	5/	19 (C)	0.81171	-0.22429	-0.09216	-0.04176	9.70576	-24.21067
5/	5/	20 (C)	0.78276	0.09290	-0.22380	0.01730	23.91604	10.02839
5/	5/	21 (C)	1.10353	-0.23046	-0.08543	-0.00000	8.91775	-24.89006
5/	5/	22 (C)	1.28747	-0.09265	0.22597	0.00000	-24.71409	-10.00576
5/	5/	23 (C)	2.55722	-0.11775	-0.04341	-0.02192	4.12128	-12.71060
5/	5/	24 (C)	2.54203	0.04877	-0.11253	0.00908	11.58168	5.26490
5/	5/	25 (C)	-1.45328	-0.30728	-0.12063	-0.00000	13.22357	-33.18675
5/	5/	26 (C)	-1.20802	-0.12353	0.29458	0.00000	-31.61889	-13.34101
5/	5/	27 (C)	0.48498	-0.15700	-0.06460	-0.02923	6.82827	-16.94747
5/	5/	28 (C)	0.46472	0.06503	-0.15675	0.01211	16.77547	7.01987
5/	5/	29 (C)	1.16504	-0.00000	0.00130	0.00000	-0.47940	-0.00000

Bar/Node/Case			FX (kip)	FY (kip)	FZ (kip)	MX (kip-in)	MY (kip-in)	MZ (kip-in)
6/	6/	30 (C)	2.15581	-0.00000	0.00414	0.00000	-0.95198	0.00000
6/	6/	31 (C)	3.13957	-0.24583	-0.08618	-0.00000	8.60092	-26.54940
6/	6/	32 (C)	3.33578	-0.09882	0.24599	0.00000	-27.27305	-10.67281
6/	6/	33 (C)	-0.96834	-0.49166	-0.18977	-0.00000	20.53447	-53.09878
6/	6/	34 (C)	-0.57592	-0.19764	0.47457	0.00000	-51.21346	-21.34562
6/	6/	35 (C)	1.44102	-0.22429	-0.09076	-0.04176	9.42085	-24.21067
6/	6/	36 (C)	1.41208	0.09290	-0.22241	0.01730	23.63113	10.02839
6/	6/	37 (C)	-2.37513	-0.49166	-0.19306	-0.00000	21.17826	-53.09878
6/	6/	38 (C)	-1.98277	-0.19764	0.47127	0.00000	-50.56968	-21.34562
6/	6/	39 (C)	0.72643	-0.22429	-0.09225	-0.04176	9.74000	-24.21067
6/	6/	40 (C)	0.69954	0.09290	-0.22390	0.01730	23.95028	10.02839
6/	22/	1	0.38426	-0.00000	0.00003	0.00000	-0.17720	0.00000
6/	22/	2	-115.71968	0.00000	-0.30170	-0.00000	21.52230	-0.00000
6/	22/	3	-115.71968	0.00000	-0.30170	-0.00000	21.52230	-0.00000
6/	22/	4	-115.71968	0.00000	-0.30170	-0.00000	21.52230	-0.00000
6/	22/	5	-4.10840	-10.45542	-3.96095	-0.00000	-0.00000	0.00000
6/	22/	6	4.23665	-4.20306	10.16657	0.00000	0.00000	0.00000
6/	22/	7	-23.52945	44.24035	-107.01643	8.23623	-6.12348	-2.53643
6/	22/	8	-9.74622	-106.80566	-44.32756	-19.88401	-2.53643	6.12348
6/	22/	9 (C)	0.73142	-0.00000	0.00093	0.00000	-0.24177	0.00000
6/	22/	10 (C)	2.31439	-0.00000	0.00603	0.00000	-0.43045	0.00000
6/	22/	11 (C)	-1.55259	-0.30178	-0.12119	-0.00000	0.34070	-0.00000
6/	22/	12 (C)	-1.70733	-0.12353	0.29402	0.00000	0.34070	-0.00000
6/	22/	13 (C)	-0.02047	-0.22429	-0.09309	-0.04176	-0.00533	0.01286
6/	22/	14 (C)	-0.04941	0.09290	-0.22473	0.01730	-0.01286	-0.00533
6/	22/	15 (C)	0.73142	-0.00000	0.00093	0.00000	-0.24177	0.00000
6/	22/	16 (C)	3.04581	-0.00000	0.00697	0.00000	-0.67221	0.00000
6/	22/	17 (C)	-1.22117	-0.30178	-0.12026	-0.00000	0.09893	-0.00000
6/	22/	18 (C)	-0.97591	-0.12353	0.29493	0.00000	0.09893	-0.00000
6/	22/	19 (C)	0.71095	-0.22424	-0.09216	-0.04176	-0.24709	0.01286
6/	22/	20 (C)	0.68201	0.09293	-0.22380	0.01730	-0.25463	-0.00533
6/	22/	21 (C)	1.00277	-0.23049	-0.08543	-0.00000	-0.30908	0.00000
6/	22/	22 (C)	1.18673	-0.09265	0.22597	0.00000	-0.30908	0.00000
6/	22/	23 (C)	2.45647	-0.11775	-0.04341	-0.02192	-0.56740	0.00675
6/	22/	24 (C)	2.44127	0.04877	-0.11253	0.00908	-0.57135	-0.00280
6/	22/	25 (C)	-1.51374	-0.30178	-0.12063	-0.00000	0.19564	-0.00000

Bar/Node/Case			FX (kip)	FY (kip)	FZ (kip)	MX (kip-in)	MY (kip-in)	MZ (kip-in)
6/	22/	26 (C)	-1.26848	-0.12353	0.29458	0.00000	0.19564	-0.00000
6/	22/	27 (C)	0.42452	-0.15700	-0.06480	-0.02923	-0.14875	0.00900
6/	22/	28 (C)	0.40426	0.06503	-0.15875	0.01211	-0.15406	-0.00373
6/	22/	29 (C)	1.02398	-0.00000	0.00130	0.00000	-0.33847	0.00000
6/	22/	30 (C)	2.03490	-0.00000	0.00414	0.00000	-0.50534	0.00000
6/	22/	31 (C)	3.01866	-0.24583	-0.08618	-0.00000	-0.70628	0.00000
6/	22/	32 (C)	3.21487	-0.09882	0.24599	0.00000	-0.70628	0.00000
6/	22/	33 (C)	-1.08924	-0.49166	-0.18977	-0.00000	0.03977	-0.00000
6/	22/	34 (C)	-0.69683	-0.19764	0.47457	0.00000	0.03977	-0.00000
6/	22/	35 (C)	1.32011	-0.22429	-0.09076	-0.04176	-0.38154	0.01286
6/	22/	36 (C)	1.29117	0.09290	-0.22241	0.01730	0.38907	0.00533
6/	22/	37 (C)	-2.46587	-0.49166	-0.19306	-0.00000	0.32753	-0.00000
6/	22/	38 (C)	-2.07345	-0.19764	0.47127	0.00000	0.32753	-0.00000
6/	22/	39 (C)	0.63781	-0.22429	-0.09225	-0.04176	-0.22292	0.01286
6/	22/	40 (C)	0.60886	0.09290	-0.22390	0.01730	-0.23045	-0.00533
7/	7/	1	0.48501	0.00000	0.00003	0.00000	-0.18011	0.00000
7/	7/	2	-115.71968	-0.00000	-0.30170	-0.00000	54.10597	-0.00000
7/	7/	3	-115.71968	-0.00000	-0.30170	-0.00000	54.10597	-0.00000
7/	7/	4	-115.71968	-0.00000	-0.30170	-0.00000	54.10597	-0.00000
7/	7/	5	-0.45674	-10.23828	4.45039	0.00000	-480.84186	-1135.73407
7/	7/	6	4.23665	4.20306	10.16657	0.00000	1097.99008	453.93024
7/	7/	7	-23.52945	-44.24035	-107.01643	-8.23623	11551.65099	-4775.42188
7/	7/	8	9.74622	-106.80566	44.32766	-19.88401	-4784.85051	-11528.88826
7/	7/	9 (C)	0.83217	0.00000	0.00093	0.00000	-0.34243	0.00000
7/	7/	10 (C)	2.31439	0.00000	0.00603	0.00000	-1.08212	0.00000
7/	7/	11 (C)	-1.84527	-0.30090	0.12802	0.00000	-13.26957	-32.49752
7/	7/	12 (C)	-1.70733	0.12353	0.29402	0.00000	-31.41343	13.34101
7/	7/	13 (C)	0.02047	-0.22429	0.09309	-0.04176	-10.04819	-24.21067
7/	7/	14 (C)	-0.04941	-0.09290	-0.22473	-0.01730	24.25847	-10.02839
7/	7/	15 (C)	0.83217	0.00000	0.00093	0.00000	-0.34243	0.00000
7/	7/	16 (C)	3.14857	0.00000	0.00697	0.00000	-1.42455	0.00000
7/	7/	17 (C)	-1.01309	-0.30090	0.12695	0.00000	-13.61200	-32.49752
7/	7/	18 (C)	-0.87515	0.12353	0.29495	0.00000	-31.75586	13.34101
7/	7/	19 (C)	0.85264	-0.22429	0.09402	-0.04176	-10.39062	-24.21067
7/	7/	20 (C)	0.78276	-0.09290	-0.22380	-0.01730	23.91604	-10.02839
7/	7/	21 (C)	1.18402	0.22558	0.09997	0.00000	-11.0619	-24.37314

Bar/Node/Case			FX (kip)	FY (kip)	FZ (kip)	MX (kip-in)	MY (kip-in)	MZ (kip-in)
7/	7/	22 (C)	1.28747	0.09265	0.22597	0.00000	-24.71469	10.00576
7/	7/	23 (C)	2.57871	-0.11775	0.05433	-0.02192	-6.42932	-12.71050
7/	7/	24 (C)	2.54203	-0.04877	-0.11253	0.00908	11.58168	-5.56490
7/	7/	25 (C)	1.24596	-0.30090	0.12658	0.00000	-13.47562	-32.49752
7/	7/	26 (C)	-1.20802	0.12353	0.29458	0.00000	-31.61889	13.34101
7/	7/	27 (C)	0.51363	-0.15700	0.06572	-0.02923	-7.23919	-16.64747
7/	7/	28 (C)	0.46472	-0.06503	-0.15675	0.01211	16.77547	-7.61987
7/	7/	29 (C)	1.18504	0.00000	0.00130	0.00000	-0.47940	0.00000
7/	7/	30 (C)	2.15581	0.00000	0.00414	0.00000	-0.95198	0.00000
7/	7/	31 (C)	3.22543	-0.24073	0.11159	0.00000	-12.75798	-25.99802
7/	7/	32 (C)	3.33578	0.09882	0.24599	0.00000	-27.27305	10.67281
7/	7/	33 (C)	-0.79662	-0.48144	0.20577	0.00000	-22.18328	-51.99604
7/	7/	34 (C)	-0.57592	0.19764	0.47457	0.00000	-51.21346	21.34562
7/	7/	35 (C)	1.48195	-0.22429	0.09541	-0.04176	-10.67553	-24.21067
7/	7/	36 (C)	1.41208	-0.09290	-0.22241	-0.01730	23.63113	-10.02839
7/	7/	37 (C)	-2.20347	-0.48144	0.20247	0.00000	-21.53949	-51.99604
7/	7/	38 (C)	-1.98277	0.19764	0.47127	0.00000	-50.56968	21.34562
7/	7/	39 (C)	0.78943	-0.22429	0.09393	-0.04176	-10.35637	-24.21067
7/	7/	40 (C)	0.69954	-0.09290	-0.22390	-0.01730	23.95028	-10.02839
7/	23/	1	0.38426	0.00000	0.00003	0.00000	-0.17720	-0.00000
7/	23/	2	-115.71968	-0.00000	-0.30170	-0.00000	21.52230	0.00000
7/	23/	3	-115.71968	-0.00000	-0.30170	-0.00000	21.52230	0.00000
7/	23/	4	-115.71968	-0.00000	-0.30170	-0.00000	21.52230	0.00000
7/	23/	5	-0.45674	-10.23828	4.45039	0.00000	0.00000	-0.00000
7/	23/	6	4.23665	4.20306	10.16657	0.00000	0.00000	-0.00000
7/	23/	7	-23.52945	-44.24035	-107.01643	-8.23623	-6.12348	2.53643
7/	23/	8	9.74622	-106.80566	44.32768	-19.88401	2.53643	6.12348
7/	23/	9 (C)	0.73142	0.00000	0.00093	0.00000	-0.24177	-0.00000
7/	23/	10 (C)	2.31439	0.00000	0.00603	0.00000	-0.43045	-0.00000
7/	23/	11 (C)	-1.84527	-0.30090	0.12602	0.00000	0.34070	0.00000
7/	23/	12 (C)	-1.70733	0.12353	0.29402	0.00000	0.34070	0.00000
7/	23/	13 (C)	0.02047	-0.22429	0.09309	-0.04176	0.00533	0.01286
7/	23/	14 (C)	-0.04941	-0.09290	-0.22473	-0.01730	-0.01286	0.00533
7/	23/	15 (C)	0.73142	0.00000	0.00093	0.00000	-0.24177	-0.00000
7/	23/	16 (C)	3.04581	0.00000	0.00697	0.00000	-0.67221	-0.00000
7/	23/	17 (C)	-1.11385	-0.30090	0.12695	0.00000	0.09893	0.00000

Bar/Node/Case			FX (kip)	FY (kip)	FZ (kip)	MX (kip-in)	MY (kip-in)	MZ (kip-in)
7/	23/	18 (C)	-0.97591	0.12353	0.29495	0.00000	0.09893	0.00000
7/	23/	19 (C)	0.75188	-0.22429	0.09402	-0.04176	-0.23644	0.01286
7/	23/	20 (C)	0.68201	-0.09290	-0.22380	-0.01730	-0.25463	0.00533
7/	23/	21 (C)	1.08326	-0.22558	0.09997	0.00000	-0.30908	-0.00000
7/	23/	22 (C)	1.18672	0.09265	0.22597	0.00000	-0.30908	-0.00000
7/	23/	23 (C)	2.47736	-0.11775	0.05433	-0.02192	-0.56180	0.00675
7/	23/	24 (C)	2.44127	-0.04877	-0.11253	-0.00908	-0.57135	0.00280
7/	23/	25 (C)	1.40642	-0.30090	0.12658	0.00000	0.19564	0.00000
7/	23/	26 (C)	-1.26848	0.12353	0.29458	0.00000	0.19564	0.00000
7/	23/	27 (C)	0.45318	-0.15700	0.06572	-0.02923	-0.14133	0.00900
7/	23/	28 (C)	0.40426	-0.06503	-0.15675	-0.01211	-0.15406	0.00373
7/	23/	29 (C)	1.02398	0.00000	0.00130	0.00000	-0.33847	-0.00000
7/	23/	30 (C)	2.03490	0.00000	0.00414	0.00000	-0.50534	-0.00000
7/	23/	31 (C)	3.10452	-0.24073	0.11159	0.00000	-0.70628	-0.00000
7/	23/	32 (C)	3.21487	0.09882	0.24599	0.00000	-0.70628	-0.00000
7/	23/	33 (C)	-0.91753	-0.48144	0.20577	0.00000	0.03977	0.00000
7/	23/	34 (C)	-0.69683	0.19764	0.47457	0.00000	0.03977	0.00000
7/	23/	35 (C)	1.36105	-0.22429	0.09541	-0.04176	-0.37088	0.01286
7/	23/	36 (C)	1.29117	-0.09290	-0.22241	-0.01730	-0.38907	0.00533
7/	23/	37 (C)	-2.29415	-0.48144	0.20247	0.00000	0.32753	0.00000
7/	23/	38 (C)	-2.07345	0.19764	0.47127	0.00000	0.32753	0.00000
7/	23/	39 (C)	0.67874	-0.22429	0.09393	-0.04176	-0.21226	0.01286
7/	23/	40 (C)	0.60886	-0.09290	-0.22390	-0.01730	-0.23045	0.00533
8/	8/	1	0.48501	-0.00000	0.00003	-0.00000	-0.18011	-0.00000
8/	8/	2	-115.71968	0.00000	-0.30170	0.00000	54.10597	0.00000
8/	8/	3	-115.71968	0.00000	-0.30170	0.00000	54.10597	0.00000
8/	8/	4	-115.71968	0.00000	-0.30170	0.00000	54.10597	0.00000
8/	8/	5	4.22383	-4.19896	10.15180	0.00000	-1096.39403	-453.27175
8/	8/	6	0.45135	10.35300	4.45651	-0.00000	-481.30296	1107.32380
8/	8/	7	-9.74622	-106.80566	-44.32769	-19.88401	4784.65051	-11528.88826
8/	8/	8	23.52945	-44.24035	107.01643	-8.23623	-11551.65099	-4775.42188
8/	8/	9 (C)	0.83217	-0.00000	0.00093	-0.00000	-0.34243	-0.00000
8/	8/	10 (C)	2.31439	-0.00000	0.00603	-0.00000	-1.08212	-0.00000
8/	8/	11 (C)	-1.70771	-0.12335	0.29359	0.00000	-31.36652	-13.32166
8/	8/	12 (C)	-1.84511	0.30134	0.12620	-0.00000	-13.28900	32.54425
8/	8/	13 (C)	0.04941	-0.09290	0.22473	-0.01730	-24.25847	-10.02839

Bar/Node/Case			FX (kip)	FY (kip)	FZ (kip)	MX (kip-in)	MY (kip-in)	MZ (kip-in)
8/	8/	14 (C)	-0.02047	-0.22429	-0.09309	-0.04176	10.04818	-24.21067
8/	8/	15 (C)	0.83217	-0.00000	0.00093	-0.00000	-0.34243	-0.00000
8/	8/	16 (C)	3.14657	-0.00000	0.00697	-0.00000	-1.42455	-0.00000
8/	8/	17 (C)	-0.87554	-0.12335	0.29452	0.00000	-31.70865	-13.32166
8/	8/	18 (C)	-1.01293	0.30134	0.12713	-0.00000	-13.63145	32.54425
8/	8/	19 (C)	0.88159	-0.09290	0.22567	-0.01730	-24.60090	-10.02839
8/	8/	20 (C)	0.81171	-0.22429	-0.09216	-0.04176	9.70576	-24.21067
8/	8/	21 (C)	1.28719	-0.09251	0.22565	0.00000	-24.67891	-9.99124
8/	8/	22 (C)	1.18414	0.22000	0.10011	-0.00000	-11.12077	24.40816
8/	8/	23 (C)	2.59391	-0.04877	0.12344	-0.00908	-13.88971	-5.26490
8/	8/	24 (C)	2.55722	-0.11775	-0.04341	-0.02192	4.12128	-12.71060
8/	8/	25 (C)	-1.20841	-0.12335	0.29414	0.00000	-31.67188	-13.32166
8/	8/	26 (C)	-1.34580	0.30134	0.12676	-0.00000	-13.49445	32.54425
8/	8/	27 (C)	0.53389	-0.06503	0.15787	-0.01211	-17.18608	-7.01907
8/	8/	28 (C)	0.48498	-0.15700	-0.06466	-0.02923	8.82027	-16.94747
8/	8/	29 (C)	1.16504	-0.00000	0.00130	-0.00000	-0.47940	-0.00000
8/	8/	30 (C)	2.15581	-0.00000	0.00414	-0.00000	-0.95188	-0.00000
8/	8/	31 (C)	3.33547	-0.09868	0.24564	0.00000	-27.23553	-10.65733
8/	8/	32 (C)	3.22555	0.24107	0.11173	-0.00000	-12.77350	26.03540
8/	8/	33 (C)	-0.57653	-0.19736	0.47387	0.00000	-51.13841	-21.31465
8/	8/	34 (C)	-0.70637	0.48214	0.20808	-0.00000	22.21437	52.07079
8/	8/	35 (C)	1.51090	-0.09290	0.22708	-0.01730	-24.88581	-10.02839
8/	8/	36 (C)	1.44102	-0.22429	-0.09076	-0.04176	9.42085	-24.21067
8/	8/	37 (C)	-1.98338	-0.19736	0.47058	0.00000	-50.49462	-21.31465
8/	8/	38 (C)	-2.20322	0.48214	0.20278	-0.00000	-21.57058	52.07079
8/	8/	39 (C)	0.79837	-0.09290	0.22557	-0.01730	-24.56565	-10.02839
8/	8/	40 (C)	0.72849	-0.22429	-0.09225	-0.04176	9.74000	-24.21067
8/	24/	1	0.38426	-0.00000	0.00003	-0.00000	-0.17730	0.00000
8/	24/	2	-115.71968	0.00000	-0.30170	0.00000	21.52230	-0.00000
8/	24/	3	-115.71968	0.00000	-0.30170	0.00000	21.52230	-0.00000
8/	24/	4	-115.71968	0.00000	-0.30170	0.00000	21.52230	-0.00000
8/	24/	5	4.22363	-4.19696	10.15180	0.00000	0.00000	0.00000
8/	24/	6	-0.45135	10.25300	4.45651	-0.00000	-0.00000	0.00000
8/	24/	7	-9.74622	-106.80588	-44.32768	-19.88401	-2.53643	6.12348
8/	24/	8	23.52045	-44.24035	107.01643	-8.23523	6.12348	2.53643
8/	24/	9 (C)	0.73142	-0.00000	0.00093	-0.00000	-0.24177	0.00000

Bar/Node/Case			FX (kip)	FY (kip)	FZ (kip)	MX (kip-in)	MY (kip-in)	MZ (kip-in)
8/	24/	10 (C)	2.31439	-0.00000	0.00603	-0.00000	-0.43045	0.00000
8/	24/	11 (C)	-1.70771	-0.12335	0.29359	0.00000	0.34070	-0.00000
8/	24/	12 (C)	-1.84511	0.30134	0.12620	-0.00000	0.34070	-0.00000
8/	24/	13 (C)	0.04941	-0.09290	0.22473	-0.01730	0.01286	0.00533
8/	24/	14 (C)	-0.02047	-0.22429	-0.09309	-0.04176	-0.00533	0.01286
8/	24/	15 (C)	0.73142	-0.00000	0.00093	-0.00000	-0.24177	0.00000
8/	24/	16 (C)	3.04581	-0.00000	0.00697	-0.00000	-0.67221	0.00000
8/	24/	17 (C)	-0.97629	-0.12335	0.29452	0.00000	0.09893	-0.00000
8/	24/	18 (C)	-1.11369	0.30134	0.12713	-0.00000	0.09893	-0.00000
8/	24/	19 (C)	0.78683	-0.09290	0.22567	-0.01730	-0.22891	0.00533
8/	24/	20 (C)	0.71095	-0.22429	-0.09216	-0.04176	-0.21709	0.01286
8/	24/	21 (C)	1.18643	-0.09251	0.22565	0.00000	-0.30908	0.00000
8/	24/	22 (C)	1.08338	0.22000	0.10011	-0.00000	-0.30908	0.00000
8/	24/	23 (C)	2.49315	-0.04877	0.12344	-0.00908	-0.55785	0.00280
8/	24/	24 (C)	2.45647	-0.11775	-0.04341	-0.02192	-0.56740	0.00675
8/	24/	25 (C)	-1.26886	-0.12335	0.29414	0.00000	0.19564	-0.00000
8/	24/	26 (C)	-1.40626	0.30134	0.12676	-0.00000	0.19564	-0.00000
8/	24/	27 (C)	0.47346	-0.06503	0.15787	-0.01211	-0.13606	0.00373
8/	24/	28 (C)	0.42452	-0.15700	-0.06466	-0.02923	-0.14879	0.00900
8/	24/	29 (C)	1.02398	-0.00000	0.00130	-0.00000	-0.33847	0.00000
8/	24/	30 (C)	2.03490	-0.00000	0.00414	-0.00000	-0.50534	0.00000
8/	24/	31 (C)	3.21456	-0.09868	0.24564	0.00000	-0.70628	0.00000
8/	24/	32 (C)	3.10464	0.24107	0.11173	-0.00000	-0.70628	0.00000
8/	24/	33 (C)	-0.89744	-0.19736	0.47387	0.00000	0.03977	-0.00000
8/	24/	34 (C)	-0.01727	0.48214	0.20606	-0.00000	0.03977	-0.00000
8/	24/	35 (C)	1.38999	-0.09290	0.22708	-0.01730	-0.36335	0.00533
8/	24/	36 (C)	1.32011	-0.22429	-0.09076	-0.04176	-0.38154	0.01286
8/	24/	37 (C)	-2.07406	-0.19736	0.47058	0.00000	0.32753	-0.00000
8/	24/	38 (C)	-2.20300	0.48214	0.20276	-0.00000	0.32753	-0.00000
8/	24/	39 (C)	0.70769	-0.09290	0.22557	-0.01730	-0.20473	0.00533
8/	24/	40 (C)	0.63781	-0.22429	-0.09225	-0.04176	-0.22292	0.01286
9/	17/	1	-1.03185	0.0	0.04375	0.0	0.0	0.0
9/	17/	2	249.08976	0.0	-23.31692	0.0	0.0	0.0
9/	17/	3	249.08976	0.0	-23.31692	0.0	0.0	0.0
9/	17/	4	249.08976	0.0	-23.31692	0.0	0.0	0.0
9/	17/	5	-3.55680	0.0	0.0	0.0	0.0	0.0

Bar/Node/Case			FX (kip)	FY (kip)	FZ (kip)	MX (kip-in)	MY (kip-in)	MZ (kip-in)
9/	17/	6	12.53364	0.0	0.0	0.0	0.0	0.0
9/	17/	7	-78.29497	16.48755	0.0	0.0	0.0	0.0
9/	17/	8	-45.31987	16.48755	0.0	0.0	0.0	0.0
9/	17/	9 (C)	-1.77912	0.0	0.11370	0.0	0.0	0.0
9/	17/	10 (C)	-4.98180	0.0	0.46634	0.0	0.0	0.0
9/	17/	11 (C)	3.83856	0.0	-0.36911	0.0	0.0	0.0
9/	17/	12 (C)	4.31145	0.0	-0.36911	0.0	0.0	0.0
9/	17/	13 (C)	-0.09517	0.03462	0.0	0.0	0.0	0.0
9/	17/	14 (C)	-0.16442	0.03462	0.0	0.0	0.0	0.0
9/	17/	15 (C)	-1.77912	0.0	0.11370	0.0	0.0	0.0
9/	17/	16 (C)	-6.76092	0.0	0.58004	0.0	0.0	0.0
9/	17/	17 (C)	2.05944	0.0	-0.25540	0.0	0.0	0.0
9/	17/	18 (C)	2.53233	0.0	-0.25540	0.0	0.0	0.0
9/	17/	19 (C)	-1.87429	0.03462	0.11370	0.0	0.0	0.0
9/	17/	20 (C)	-1.94354	0.03462	0.11370	0.0	0.0	0.0
9/	17/	21 (C)	-2.63655	0.0	0.18863	0.0	0.0	0.0
9/	17/	22 (C)	-2.28188	0.0	0.18863	0.0	0.0	0.0
9/	17/	23 (C)	-5.56543	0.01818	0.46346	0.0	0.0	0.0
9/	17/	24 (C)	-5.60179	0.01818	0.46346	0.0	0.0	0.0
9/	17/	25 (C)	2.77108	0.0	-0.30088	0.0	0.0	0.0
9/	17/	26 (C)	3.24398	0.0	-0.30088	0.0	0.0	0.0
9/	17/	27 (C)	-1.13409	0.02424	0.06822	0.0	0.0	0.0
9/	17/	28 (C)	-1.18257	0.02424	0.06822	0.0	0.0	0.0
9/	17/	29 (C)	-2.49077	0.0	0.15919	0.0	0.0	0.0
9/	17/	30 (C)	-4.62584	0.0	0.36961	0.0	0.0	0.0
9/	17/	31 (C)	-7.03497	0.0	0.58730	0.0	0.0	0.0
9/	17/	32 (C)	-6.65665	0.0	0.58730	0.0	0.0	0.0
9/	17/	33 (C)	1.51585	0.0	-0.22096	0.0	0.0	0.0
9/	17/	34 (C)	2.27248	0.0	-0.22096	0.0	0.0	0.0
9/	17/	35 (C)	-3.29572	0.03462	0.22971	0.0	0.0	0.0
9/	17/	36 (C)	-3.22648	0.03462	0.22971	0.0	0.0	0.0
9/	17/	37 (C)	4.54048	0.0	-0.48824	0.0	0.0	0.0
9/	17/	38 (C)	5.29712	0.0	-0.48824	0.0	0.0	0.0
9/	17/	39 (C)	-1.69638	0.03462	0.10233	0.0	0.0	0.0
9/	17/	40 (C)	-1.76562	0.03462	0.10233	0.0	0.0	0.0
9/	18/	1	-1.03185	0.0	-0.04375	0.0	0.0	0.0

Bar/Node/Case			FX (kip)	FY (kip)	FZ (kip)	MX (kip-in)	MY (kip-in)	MZ (kip-in)
9/	18/	2	249.08976	0.0	23.31692	0.0	0.0	0.0
9/	18/	3	249.08976	0.0	23.31692	0.0	0.0	0.0
9/	18/	4	249.08976	0.0	23.31692	0.0	0.0	0.0
9/	18/	5	-3.55680	0.0	0.0	0.0	0.0	0.0
9/	18/	6	12.53364	0.0	0.0	0.0	0.0	0.0
9/	18/	7	-45.31987	-16.48755	0.0	0.0	0.0	0.0
9/	18/	8	-78.29497	-16.48755	0.0	0.0	0.0	0.0
9/	18/	9 (C)	-1.77912	0.0	-0.11370	0.0	0.0	0.0
9/	18/	10 (C)	-4.98180	0.0	-0.46634	0.0	0.0	0.0
9/	18/	11 (C)	3.83856	0.0	0.36911	0.0	0.0	0.0
9/	18/	12 (C)	4.31145	0.0	0.36911	0.0	0.0	0.0
9/	18/	13 (C)	-0.16442	-0.03462	0.0	0.0	0.0	0.0
9/	18/	14 (C)	-0.09517	-0.03462	0.0	0.0	0.0	0.0
9/	18/	15 (C)	-1.77912	0.0	-0.11370	0.0	0.0	0.0
9/	18/	16 (C)	-6.76092	0.0	-0.58004	0.0	0.0	0.0
9/	18/	17 (C)	2.05944	0.0	0.25540	0.0	0.0	0.0
9/	18/	18 (C)	2.53233	0.0	0.25540	0.0	0.0	0.0
9/	18/	19 (C)	-1.94354	-0.03462	-0.11370	0.0	0.0	0.0
9/	18/	20 (C)	-1.87429	-0.03462	-0.11370	0.0	0.0	0.0
9/	18/	21 (C)	-2.63655	0.0	-0.18863	0.0	0.0	0.0
9/	18/	22 (C)	-2.28188	0.0	-0.18863	0.0	0.0	0.0
9/	18/	23 (C)	-5.60179	-0.01818	-0.46346	0.0	0.0	0.0
9/	18/	24 (C)	-5.56543	-0.01818	-0.46346	0.0	0.0	0.0
9/	18/	25 (C)	2.77108	0.0	0.30088	0.0	0.0	0.0
9/	18/	26 (C)	3.24398	0.0	0.30088	0.0	0.0	0.0
9/	18/	27 (C)	-1.18257	-0.02424	-0.06822	0.0	0.0	0.0
9/	18/	28 (C)	-1.13409	-0.02424	-0.06822	0.0	0.0	0.0
9/	18/	29 (C)	-2.49077	0.0	-0.15919	0.0	0.0	0.0
9/	18/	30 (C)	-4.62584	0.0	-0.36961	0.0	0.0	0.0
9/	18/	31 (C)	-7.03497	0.0	-0.58730	0.0	0.0	0.0
9/	18/	32 (C)	-6.65665	0.0	-0.58730	0.0	0.0	0.0
9/	18/	33 (C)	1.51585	0.0	0.22096	0.0	0.0	0.0
9/	18/	34 (C)	2.27248	0.0	0.22096	0.0	0.0	0.0
9/	18/	35 (C)	-3.29572	-0.03462	-0.22971	0.0	0.0	0.0
9/	18/	36 (C)	-3.22648	-0.03462	-0.22971	0.0	0.0	0.0
9/	18/	37 (C)	4.54048	0.0	0.48824	0.0	0.0	0.0

Bar/Node/Case	FX (kip)	FY (kip)	FZ (kip)	MX (kip-in)	MY (kip-in)	MZ (kip-in)
9/ 18/ 38 (C)	5.29712	0.0	0.48824	0.0	0.0	0.0
9/ 18/ 39 (C)	-1.76563	-0.03462	-0.10233	0.0	0.0	0.0
9/ 18/ 40 (C)	-1.69638	-0.03462	-0.10233	0.0	0.0	0.0
10/ 18/ 1	-1.03185	0.0	0.04375	0.0	0.0	0.0
10/ 18/ 2	249.08976	0.0	-23.31692	0.0	0.0	0.0
10/ 18/ 3	249.08976	0.0	-23.31692	0.0	0.0	0.0
10/ 18/ 4	249.08976	0.0	-23.31692	0.0	0.0	0.0
10/ 18/ 5	7.21189	0.0	0.0	0.0	0.0	0.0
10/ 18/ 6	11.58089	0.0	0.0	0.0	0.0	0.0
10/ 18/ 7	-87.40889	23.31692	0.0	0.0	0.0	0.0
10/ 18/ 8	23.31692	0.0	0.0	0.0	0.0	0.0
10/ 18/ 9 (C)	-1.77912	0.0	0.11370	0.0	0.0	0.0
10/ 18/ 10 (C)	-4.98180	0.0	0.46634	0.0	0.0	0.0
10/ 18/ 11 (C)	4.15505	0.0	-0.36911	0.0	0.0	0.0
10/ 18/ 12 (C)	4.28345	0.0	-0.36911	0.0	0.0	0.0
10/ 18/ 13 (C)	0.04897	0.0	0.0	0.0	0.0	0.0
10/ 18/ 14 (C)	-0.18356	0.04897	0.0	0.0	0.0	0.0
10/ 18/ 15 (C)	-1.77912	0.0	0.11370	0.0	0.0	0.0
10/ 18/ 16 (C)	-6.76092	0.0	0.58004	0.0	0.0	0.0
10/ 18/ 17 (C)	2.37593	0.0	-0.25540	0.0	0.0	0.0
10/ 18/ 18 (C)	2.50433	0.0	-0.25540	0.0	0.0	0.0
10/ 18/ 19 (C)	-1.73016	0.0	0.11370	0.0	0.0	0.0
10/ 18/ 20 (C)	-1.96288	0.04897	0.11370	0.0	0.0	0.0
10/ 18/ 21 (C)	-2.39918	0.0	0.18663	0.0	0.0	0.0
10/ 18/ 22 (C)	-2.30288	0.0	0.18663	0.0	0.0	0.0
10/ 18/ 23 (C)	-5.48976	0.0	0.46346	0.0	0.0	0.0
10/ 18/ 24 (C)	-5.61184	0.02571	0.46346	0.0	0.0	0.0
10/ 18/ 25 (C)	3.08758	0.0	-0.30088	0.0	0.0	0.0
10/ 18/ 26 (C)	3.21598	0.0	-0.30088	0.0	0.0	0.0
10/ 18/ 27 (C)	-1.03320	0.0	0.06822	0.0	0.0	0.0
10/ 18/ 28 (C)	-1.19596	0.03428	0.06822	0.0	0.0	0.0
10/ 18/ 29 (C)	-2.49077	0.0	0.15919	0.0	0.0	0.0
10/ 18/ 30 (C)	-4.62584	0.0	0.36961	0.0	0.0	0.0
10/ 18/ 31 (C)	-6.78178	0.0	0.58730	0.0	0.0	0.0
10/ 18/ 32 (C)	-6.67906	0.0	0.58730	0.0	0.0	0.0
10/ 18/ 33 (C)	2.02223	0.0	-0.22096	0.0	0.0	0.0

Bar/Node/Case	FX (kip)	FY (kip)	FZ (kip)	MX (kip-in)	MY (kip-in)	MZ (kip-in)
10/ 18/ 34 (C)	2.22768	0.0	-0.22096	0.0	0.0	0.0
10/ 18/ 35 (C)	-3.08234	0.0	0.22071	0.0	0.0	0.0
10/ 18/ 36 (C)	-3.31486	0.04897	0.22971	0.0	0.0	0.0
10/ 18/ 37 (C)	5.04687	0.0	-0.48824	0.0	0.0	0.0
10/ 18/ 38 (C)	5.25232	0.0	-0.48824	0.0	0.0	0.0
10/ 18/ 39 (C)	-1.55234	0.0	0.10233	0.0	0.0	0.0
10/ 18/ 40 (C)	-1.78477	0.04897	0.10233	0.0	0.0	0.0
10/ 19/ 1	-1.03185	0.0	-0.04375	0.0	0.0	0.0
10/ 19/ 2	249.08976	0.0	23.31692	0.0	0.0	0.0
10/ 19/ 3	249.08976	0.0	23.31692	0.0	0.0	0.0
10/ 19/ 4	249.08976	0.0	23.31692	0.0	0.0	0.0
10/ 19/ 5	7.21189	0.0	0.0	0.0	0.0	0.0
10/ 19/ 6	11.58089	0.0	0.0	0.0	0.0	0.0
10/ 19/ 7	-87.40889	-23.31692	0.0	0.0	0.0	0.0
10/ 19/ 8	-23.31692	0.0	0.0	0.0	0.0	0.0
10/ 19/ 9 (C)	-1.77912	0.0	-0.11370	0.0	0.0	0.0
10/ 19/ 10 (C)	-4.98180	0.0	0.46634	0.0	0.0	0.0
10/ 19/ 11 (C)	4.15505	0.0	0.36911	0.0	0.0	0.0
10/ 19/ 12 (C)	4.28345	0.0	0.36911	0.0	0.0	0.0
10/ 19/ 13 (C)	-0.04897	0.0	0.0	0.0	0.0	0.0
10/ 19/ 14 (C)	-0.18356	-0.04897	0.0	0.0	0.0	0.0
10/ 19/ 15 (C)	-1.77912	0.0	0.11370	0.0	0.0	0.0
10/ 19/ 16 (C)	-6.76092	0.0	-0.58004	0.0	0.0	0.0
10/ 19/ 17 (C)	2.37593	0.0	0.25540	0.0	0.0	0.0
10/ 19/ 18 (C)	2.50433	0.0	0.25540	0.0	0.0	0.0
10/ 19/ 19 (C)	-1.82809	0.0	-0.11370	0.0	0.0	0.0
10/ 19/ 20 (C)	-1.96268	-0.04897	-0.11370	0.0	0.0	0.0
10/ 19/ 21 (C)	-2.39918	0.0	-0.18663	0.0	0.0	0.0
10/ 19/ 22 (C)	-2.30288	0.0	-0.18663	0.0	0.0	0.0
10/ 19/ 23 (C)	-5.54117	0.0	-0.46346	0.0	0.0	0.0
10/ 19/ 24 (C)	-5.61184	-0.02571	-0.46346	0.0	0.0	0.0
10/ 19/ 25 (C)	3.08758	0.0	0.30088	0.0	0.0	0.0
10/ 19/ 26 (C)	3.21598	0.0	0.30088	0.0	0.0	0.0
10/ 19/ 27 (C)	-1.10175	0.0	-0.06822	0.0	0.0	0.0
10/ 19/ 28 (C)	-1.19596	-0.03428	-0.06822	0.0	0.0	0.0
10/ 19/ 29 (C)	-2.49077	0.0	-0.15919	0.0	0.0	0.0

Bar/Node/Case	FX (kip)	FY (kip)	FZ (kip)	MX (kip-in)	MY (kip-in)	MZ (kip-in)
10/ 19/ 30 (C)	-4.62584	0.0	-0.36961	0.0	0.0	0.0
10/ 19/ 31 (C)	-6.78178	0.0	-0.58730	0.0	0.0	0.0
10/ 19/ 32 (C)	-6.67906	0.0	-0.58730	0.0	0.0	0.0
10/ 19/ 33 (C)	2.02223	0.0	0.22096	0.0	0.0	0.0
10/ 19/ 34 (C)	2.22768	0.0	0.22096	0.0	0.0	0.0
10/ 19/ 35 (C)	-3.18027	0.0	-0.22971	0.0	0.0	0.0
10/ 19/ 36 (C)	-3.31486	-0.04897	-0.22971	0.0	0.0	0.0
10/ 19/ 37 (C)	5.04687	0.0	0.48824	0.0	0.0	0.0
10/ 19/ 38 (C)	5.25232	0.0	0.48824	0.0	0.0	0.0
10/ 19/ 39 (C)	-1.65017	0.0	-0.10233	0.0	0.0	0.0
10/ 19/ 40 (C)	-1.78477	-0.04897	-0.10233	0.0	0.0	0.0
11/ 19/ 1	-1.03185	0.0	0.04375	0.0	0.0	0.0
11/ 19/ 2	249.08976	0.0	-23.31692	0.0	0.0	0.0
11/ 19/ 3	249.08976	0.0	23.31692	0.0	0.0	0.0
11/ 19/ 4	249.08976	0.0	-23.31692	0.0	0.0	0.0
11/ 19/ 5	12.51048	0.0	0.0	0.0	0.0	0.0
11/ 19/ 6	12.53364	0.0	0.0	0.0	0.0	0.0
11/ 19/ 7	-45.31987	16.48755	0.0	0.0	0.0	0.0
11/ 19/ 8	78.29497	-16.48755	0.0	0.0	0.0	0.0
11/ 19/ 9 (C)	-1.77912	0.0	0.11370	0.0	0.0	0.0
11/ 19/ 10 (C)	-4.98180	0.0	0.46634	0.0	0.0	0.0
11/ 19/ 11 (C)	4.31095	0.0	-0.36911	0.0	0.0	0.0
11/ 19/ 12 (C)	4.31145	0.0	-0.36911	0.0	0.0	0.0
11/ 19/ 13 (C)	0.16442	-0.03462	0.0	0.0	0.0	0.0
11/ 19/ 14 (C)	-0.09517	0.03462	0.0	0.0	0.0	0.0
11/ 19/ 15 (C)	-1.77912	0.0	0.11370	0.0	0.0	0.0
11/ 19/ 16 (C)	-6.76092	0.0	0.58004	0.0	0.0	0.0
11/ 19/ 17 (C)	2.53183	0.0	-0.25540	0.0	0.0	0.0
11/ 19/ 18 (C)	2.53233	0.0	-0.25540	0.0	0.0	0.0
11/ 19/ 19 (C)	-1.61470	-0.03462	0.11370	0.0	0.0	0.0
11/ 19/ 20 (C)	-1.87429	0.03462	0.11370	0.0	0.0	0.0
11/ 19/ 21 (C)	-2.28226	0.0	0.18663	0.0	0.0	0.0
11/ 19/ 22 (C)	-2.28188	0.0	0.18663	0.0	0.0	0.0
11/ 19/ 23 (C)	-5.42915	-0.01818	0.46346	0.0	0.0	0.0
11/ 19/ 24 (C)	-5.56543	0.01818	0.46346	0.0	0.0	0.0
11/ 19/ 25 (C)	3.24348	0.0	-0.30088	0.0	0.0	0.0

Bar/Node/Case	FX (kip)	FY (kip)	FZ (kip)	MX (kip-in)	MY (kip-in)	MZ (kip-in)
11/ 19/ 26 (C)	3.24398	0.0	-0.30088	0.0	0.0	0.0
11/ 19/ 27 (C)	-0.95238	-0.02424	0.06822	0.0	0.0	0.0
11/ 19/ 28 (C)	-1.13409	0.02424	0.06822	0.0	0.0	0.0
11/ 19/ 29 (C)	-2.49077	0.0	0.15919	0.0	0.0	0.0
11/ 19/ 30 (C)	-4.62584	0.0	0.36961	0.0	0.0	0.0
11/ 19/ 31 (C)	-6.65706	0.0	0.58730	0.0	0.0	0.0
11/ 19/ 32 (C)	-6.65665	0.0	0.58730	0.0	0.0	0.0
11/ 19/ 33 (C)	2.27168	0.0	-0.22096	0.0	0.0	0.0
11/ 19/ 34 (C)	2.27248	0.0	-0.22096	0.0	0.0	0.0
11/ 19/ 35 (C)	-2.96689	-0.03462	0.22971	0.0	0.0	0.0
11/ 19/ 36 (C)	-3.22648	0.03462	0.22971	0.0	0.0	0.0
11/ 19/ 37 (C)	5.29631	0.0	-0.48824	0.0	0.0	0.0
11/ 19/ 38 (C)	5.29712	0.0	-0.48824	0.0	0.0	0.0
11/ 19/ 39 (C)	-1.43679	-0.03462	0.10233	0.0	0.0	0.0
11/ 19/ 40 (C)	-1.69638	0.03462	0.10233	0.0	0.0	0.0
11/ 20/ 1	-1.03185	0.0	-0.04375	0.0	0.0	0.0
11/ 20/ 2	249.08976	0.0	23.31692	0.0	0.0	0.0
11/ 20/ 3	249.08976	0.0	23.31692	0.0	0.0	0.0
11/ 20/ 4	249.08976	0.0	23.31692	0.0	0.0	0.0
11/ 20/ 5	12.51048	0.0	0.0	0.0	0.0	0.0
11/ 20/ 6	12.53364	0.0	0.0	0.0	0.0	0.0
11/ 20/ 7	-78.29497	-16.48755	0.0	0.0	0.0	0.0
11/ 20/ 8	45.31987	16.48755	0.0	0.0	0.0	0.0
11/ 20/ 9 (C)	-1.77912	0.0	-0.11370	0.0	0.0	0.0
11/ 20/ 10 (C)	-4.98180	0.0	-0.46634	0.0	0.0	0.0
11/ 20/ 11 (C)	4.31095	0.0	0.36911	0.0	0.0	0.0
11/ 20/ 12 (C)	4.31145	0.0	0.36911	0.0	0.0	0.0
11/ 20/ 13 (C)	0.09517	0.03462	0.0	0.0	0.0	0.0
11/ 20/ 14 (C)	-0.16442	-0.03462	0.0	0.0	0.0	0.0
11/ 20/ 15 (C)	-1.77912	0.0	-0.11370	0.0	0.0	0.0
11/ 20/ 16 (C)	-6.76092	0.0	-0.58004	0.0	0.0	0.0
11/ 20/ 17 (C)	2.53183	0.0	0.25540	0.0	0.0	0.0
11/ 20/ 18 (C)	2.53233	0.0	0.25540	0.0	0.0	0.0
11/ 20/ 19 (C)	-1.68395	0.03462	-0.11370	0.0	0.0	0.0
11/ 20/ 20 (C)	-1.94354	-0.03462	0.11370	0.0	0.0	0.0
11/ 20/ 21 (C)	-2.28226	0.0	-0.18663	0.0	0.0	0.0

Bar/Node/Case	FX (kip)	FY (kip)	FZ (kip)	MX (kip-in)	MY (kip-in)	MZ (kip-in)
11/ 20/ 22 (C)	-2.28188	0.0	-0.18663	0.0	0.0	0.0
11/ 20/ 23 (C)	-5.46550	0.01818	-0.46346	0.0	0.0	0.0
11/ 20/ 24 (C)	-5.80179	-0.01818	-0.46346	0.0	0.0	0.0
11/ 20/ 25 (C)	3.24348	0.0	0.30088	0.0	0.0	0.0
11/ 20/ 26 (C)	3.24398	0.0	0.30088	0.0	0.0	0.0
11/ 20/ 27 (C)	-1.00086	0.02424	-0.06822	0.0	0.0	0.0
11/ 20/ 28 (C)	-1.18257	-0.02424	-0.06822	0.0	0.0	0.0
11/ 20/ 29 (C)	-2.49077	0.0	-0.15919	0.0	0.0	0.0
11/ 20/ 30 (C)	-4.62584	0.0	-0.36951	0.0	0.0	0.0
11/ 20/ 31 (C)	-6.65706	0.0	-0.58730	0.0	0.0	0.0
11/ 20/ 32 (C)	-6.65665	0.0	-0.58730	0.0	0.0	0.0
11/ 20/ 33 (C)	2.27168	0.0	0.22096	0.0	0.0	0.0
11/ 20/ 34 (C)	2.27248	0.0	0.22096	0.0	0.0	0.0
11/ 20/ 35 (C)	-3.03613	0.03462	-0.22971	0.0	0.0	0.0
11/ 20/ 36 (C)	-3.29572	-0.03462	-0.22971	0.0	0.0	0.0
11/ 20/ 37 (C)	5.29631	0.0	0.48824	0.0	0.0	0.0
11/ 20/ 39 (C)	5.29712	0.0	0.48824	0.0	0.0	0.0
11/ 20/ 39 (C)	-1.50604	0.03462	-0.10233	0.0	0.0	0.0
11/ 20/ 40 (C)	-1.76563	-0.03462	-0.10233	0.0	0.0	0.0
12/ 20/ 1	-1.03185	0.0	0.04375	0.0	0.0	0.0
12/ 20/ 2	249.08976	0.0	-23.31692	0.0	0.0	0.0
12/ 20/ 3	249.08976	0.0	-23.31692	0.0	0.0	0.0
12/ 20/ 4	249.08976	0.0	-23.31692	0.0	0.0	0.0
12/ 20/ 5	11.55663	0.0	0.0	0.0	0.0	0.0
12/ 20/ 6	7.21189	0.0	0.0	0.0	0.0	0.0
12/ 20/ 7	23.31692	0.0	0.0	0.0	0.0	0.0
12/ 20/ 8	87.40889	-23.31692	0.0	0.0	0.0	0.0
12/ 20/ 9 (C)	-1.77912	0.0	0.11370	0.0	0.0	0.0
12/ 20/ 10 (C)	-4.98180	0.0	0.46634	0.0	0.0	0.0
12/ 20/ 11 (C)	4.28274	0.0	-0.36911	0.0	0.0	0.0
12/ 20/ 12 (C)	4.15505	0.0	-0.36911	0.0	0.0	0.0
12/ 20/ 13 (C)	0.18356	-0.04897	0.0	0.0	0.0	0.0
12/ 20/ 14 (C)	0.04897	0.0	0.0	0.0	0.0	0.0
12/ 20/ 15 (C)	-1.77912	0.0	0.11370	0.0	0.0	0.0
12/ 20/ 16 (C)	-6.76092	0.0	0.58004	0.0	0.0	0.0
12/ 20/ 17 (C)	2.50362	0.0	-0.25540	0.0	0.0	0.0

Bar/Node/Case	FX (kip)	FY (kip)	FZ (kip)	MX (kip-in)	MY (kip-in)	MZ (kip-in)
12/ 20/ 18 (C)	2.37593	0.0	-0.25540	0.0	0.0	0.0
12/ 20/ 19 (C)	-1.59556	-0.04897	0.11370	0.0	0.0	0.0
12/ 20/ 20 (C)	-1.73016	0.0	0.11370	0.0	0.0	0.0
12/ 20/ 21 (C)	-2.30341	0.0	0.18663	0.0	0.0	0.0
12/ 20/ 22 (C)	-2.39918	0.0	0.18663	0.0	0.0	0.0
12/ 20/ 23 (C)	-5.41910	-0.02571	0.46346	0.0	0.0	0.0
12/ 20/ 24 (C)	-5.46976	0.0	0.46346	0.0	0.0	0.0
12/ 20/ 25 (C)	3.21527	0.0	-0.30088	0.0	0.0	0.0
12/ 20/ 26 (C)	3.08758	0.0	-0.30088	0.0	0.0	0.0
12/ 20/ 27 (C)	-0.93898	-0.03428	0.06822	0.0	0.0	0.0
12/ 20/ 28 (C)	-1.03320	0.0	0.06822	0.0	0.0	0.0
12/ 20/ 29 (C)	-2.49077	0.0	0.15919	0.0	0.0	0.0
12/ 20/ 30 (C)	-4.62584	0.0	0.36961	0.0	0.0	0.0
12/ 20/ 31 (C)	-6.67963	0.0	0.58730	0.0	0.0	0.0
12/ 20/ 32 (C)	-6.78178	0.0	0.58730	0.0	0.0	0.0
12/ 20/ 33 (C)	2.22654	0.0	-0.22096	0.0	0.0	0.0
12/ 20/ 34 (C)	2.02223	0.0	-0.22096	0.0	0.0	0.0
12/ 20/ 35 (C)	-2.94775	-0.04897	0.22971	0.0	0.0	0.0
12/ 20/ 36 (C)	-3.08234	0.0	0.22971	0.0	0.0	0.0
12/ 20/ 37 (C)	5.25117	0.0	-0.48824	0.0	0.0	0.0
12/ 20/ 38 (C)	5.04687	0.0	-0.48824	0.0	0.0	0.0
12/ 20/ 39 (C)	-1.41765	-0.04897	0.10233	0.0	0.0	0.0
12/ 20/ 40 (C)	-1.55224	0.0	0.10233	0.0	0.0	0.0
12/ 21/ 1	-1.03185	0.0	-0.04375	0.0	0.0	0.0
12/ 21/ 2	249.08976	0.0	23.31692	0.0	0.0	0.0
12/ 21/ 3	249.08976	0.0	23.31692	0.0	0.0	0.0
12/ 21/ 4	249.08976	0.0	23.31692	0.0	0.0	0.0
12/ 21/ 5	11.55662	0.0	0.0	0.0	0.0	0.0
12/ 21/ 6	7.21189	0.0	0.0	0.0	0.0	0.0
12/ 21/ 7	23.31692	0.0	0.0	0.0	0.0	0.0
12/ 21/ 8	87.40889	23.31692	0.0	0.0	0.0	0.0
12/ 21/ 9 (C)	-1.77912	0.0	-0.11370	0.0	0.0	0.0
12/ 21/ 10 (C)	-4.98180	0.0	-0.46634	0.0	0.0	0.0
12/ 21/ 11 (C)	4.28274	0.0	0.36911	0.0	0.0	0.0
12/ 21/ 12 (C)	4.15505	0.0	0.36911	0.0	0.0	0.0
12/ 21/ 13 (C)	0.18356	0.04897	0.0	0.0	0.0	0.0

Bar/Node/Case	FX (kip)	FY (kip)	FZ (kip)	MX (kip-in)	MY (kip-in)	MZ (kip-in)
12/ 21/ 14 (C)	-0.04897	0.0	0.0	0.0	0.0	0.0
12/ 21/ 15 (C)	-1.77912	0.0	-0.11370	0.0	0.0	0.0
12/ 21/ 16 (C)	-6.76092	0.0	-0.58004	0.0	0.0	0.0
12/ 21/ 17 (C)	2.50362	0.0	0.25540	0.0	0.0	0.0
12/ 21/ 18 (C)	2.37593	0.0	0.25540	0.0	0.0	0.0
12/ 21/ 19 (C)	-1.59556	0.04897	-0.11370	0.0	0.0	0.0
12/ 21/ 20 (C)	-1.82809	0.0	-0.11370	0.0	0.0	0.0
12/ 21/ 21 (C)	-2.30341	0.0	-0.18663	0.0	0.0	0.0
12/ 21/ 22 (C)	-2.39918	0.0	-0.18663	0.0	0.0	0.0
12/ 21/ 23 (C)	-5.41910	0.02571	-0.46346	0.0	0.0	0.0
12/ 21/ 24 (C)	-5.54117	0.0	-0.46346	0.0	0.0	0.0
12/ 21/ 25 (C)	3.21527	0.0	0.30088	0.0	0.0	0.0
12/ 21/ 26 (C)	3.08758	0.0	0.30088	0.0	0.0	0.0
12/ 21/ 27 (C)	-0.93898	0.03428	-0.06822	0.0	0.0	0.0
12/ 21/ 28 (C)	-1.10175	0.0	-0.06822	0.0	0.0	0.0
12/ 21/ 29 (C)	-2.49077	0.0	-0.15919	0.0	0.0	0.0
12/ 21/ 30 (C)	-4.62584	0.0	-0.36961	0.0	0.0	0.0
12/ 21/ 31 (C)	-6.67963	0.0	-0.58730	0.0	0.0	0.0
12/ 21/ 32 (C)	-6.78178	0.0	-0.58730	0.0	0.0	0.0
12/ 21/ 33 (C)	2.22654	0.0	0.22096	0.0	0.0	0.0
12/ 21/ 34 (C)	2.02223	0.0	0.22096	0.0	0.0	0.0
12/ 21/ 35 (C)	-2.94775	0.04897	-0.22971	0.0	0.0	0.0
12/ 21/ 36 (C)	-3.18027	0.0	-0.22971	0.0	0.0	0.0
12/ 21/ 37 (C)	5.25117	0.0	0.48824	0.0	0.0	0.0
12/ 21/ 38 (C)	5.04687	0.0	0.48824	0.0	0.0	0.0
12/ 21/ 39 (C)	-1.41765	0.04897	-0.10233	0.0	0.0	0.0
12/ 21/ 40 (C)	-1.65017	0.0	-0.10233	0.0	0.0	0.0
13/ 21/ 1	-1.03185	0.0	0.04375	0.0	0.0	0.0
13/ 21/ 2	249.08976	0.0	-23.31692	0.0	0.0	0.0
13/ 21/ 3	249.08976	0.0	-23.31692	0.0	0.0	0.0
13/ 21/ 4	249.08976	0.0	-23.31692	0.0	0.0	0.0
13/ 21/ 5	12.51648	0.0	0.0	0.0	0.0	0.0
13/ 21/ 6	-3.57398	0.0	0.0	0.0	0.0	0.0
13/ 21/ 7	78.29497	-16.48755	0.0	0.0	0.0	0.0
13/ 21/ 8	45.31587	-16.48755	0.0	0.0	0.0	0.0
13/ 21/ 9 (C)	-1.77912	0.0	0.11370	0.0	0.0	0.0

Bar/Node/Case	FX (kip)	FY (kip)	FZ (kip)	MX (kip-in)	MY (kip-in)	MZ (kip-in)
13/ 21/ 10 (C)	-4.98180	0.0	0.46634	0.0	0.0	0.0
13/ 21/ 11 (C)	4.31095	0.0	-0.36911	0.0	0.0	0.0
13/ 21/ 12 (C)	3.83805	0.0	-0.36911	0.0	0.0	0.0
13/ 21/ 13 (C)	0.09517	-0.03462	0.0	0.0	0.0	0.0
13/ 21/ 14 (C)	0.16442	-0.03462	0.0	0.0	0.0	0.0
13/ 21/ 15 (C)	-1.77912	0.0	0.11370	0.0	0.0	0.0
13/ 21/ 16 (C)	-6.76092	0.0	0.58004	0.0	0.0	0.0
13/ 21/ 17 (C)	2.53183	0.0	-0.25540	0.0	0.0	0.0
13/ 21/ 18 (C)	2.05803	0.0	-0.25540	0.0	0.0	0.0
13/ 21/ 19 (C)	-1.59395	-0.03462	0.11370	0.0	0.0	0.0
13/ 21/ 20 (C)	-1.31470	-0.03462	0.11370	0.0	0.0	0.0
13/ 21/ 21 (C)	-2.28228	0.0	0.18663	0.0	0.0	0.0
13/ 21/ 22 (C)	-2.53803	0.0	0.18663	0.0	0.0	0.0
13/ 21/ 23 (C)	-5.46550	-0.01818	0.46346	0.0	0.0	0.0
13/ 21/ 24 (C)	-5.42915	-0.01818	0.46346	0.0	0.0	0.0
13/ 21/ 25 (C)	3.24348	0.0	-0.30088	0.0	0.0	0.0
13/ 21/ 26 (C)	2.77058	0.0	-0.30088	0.0	0.0	0.0
13/ 21/ 27 (C)	-1.00085	-0.02424	0.06822	0.0	0.0	0.0
13/ 21/ 28 (C)	-0.95238	-0.02424	0.06822	0.0	0.0	0.0
13/ 21/ 29 (C)	-2.49077	0.0	0.15919	0.0	0.0	0.0
13/ 21/ 30 (C)	-4.62584	0.0	0.36961	0.0	0.0	0.0
13/ 21/ 31 (C)	-6.65706	0.0	0.58730	0.0	0.0	0.0
13/ 21/ 32 (C)	-7.05338	0.0	0.58730	0.0	0.0	0.0
13/ 21/ 33 (C)	2.27168	0.0	-0.22096	0.0	0.0	0.0
13/ 21/ 34 (C)	1.51504	0.0	-0.22096	0.0	0.0	0.0
13/ 21/ 35 (C)	-3.03813	-0.03462	0.22971	0.0	0.0	0.0
13/ 21/ 36 (C)	-2.96689	-0.03462	0.22971	0.0	0.0	0.0
13/ 21/ 37 (C)	5.29631	0.0	-0.48824	0.0	0.0	0.0
13/ 21/ 38 (C)	4.53987	0.0	-0.48824	0.0	0.0	0.0
13/ 21/ 39 (C)	-1.50604	-0.03462	0.10233	0.0	0.0	0.0
13/ 21/ 40 (C)	-1.43679	-0.03462	0.10233	0.0	0.0	0.0
13/ 22/ 1	-1.03185	0.0	-0.04375	0.0	0.0	0.0
13/ 22/ 2	249.08976	0.0	23.31692	0.0	0.0	0.0
13/ 22/ 3	249.08976	0.0	23.31692	0.0	0.0	0.0
13/ 22/ 4	249.08976	0.0	23.31692	0.0	0.0	0.0
13/ 22/ 5	12.51648	0.0	0.0	0.0	0.0	0.0

Bar/Node/Case	FX (kip)	FY (kip)	FZ (kip)	MX (kip-in)	MY (kip-in)	MZ (kip-in)
13/ 22/ 6	-3.57396	0.0	0.0	0.0	0.0	0.0
13/ 22/ 7	45.31987	16.48755	0.0	0.0	0.0	0.0
13/ 22/ 8	78.29497	16.48755	0.0	0.0	0.0	0.0
13/ 22/ 9 (C)	-1.77912	0.0	-0.11370	0.0	0.0	0.0
13/ 22/ 10 (C)	-4.98180	0.0	-0.46634	0.0	0.0	0.0
13/ 22/ 11 (C)	4.31095	0.0	0.36911	0.0	0.0	0.0
13/ 22/ 12 (C)	3.83805	0.0	0.36911	0.0	0.0	0.0
13/ 22/ 13 (C)	0.16442	0.03462	0.0	0.0	0.0	0.0
13/ 22/ 14 (C)	0.09517	0.03462	0.0	0.0	0.0	0.0
13/ 22/ 15 (C)	-1.77912	0.0	-0.11370	0.0	0.0	0.0
13/ 22/ 16 (C)	-0.76092	0.0	-0.58004	0.0	0.0	0.0
13/ 22/ 17 (C)	2.53183	0.0	0.25540	0.0	0.0	0.0
13/ 22/ 18 (C)	2.05893	0.0	0.25540	0.0	0.0	0.0
13/ 22/ 19 (C)	-1.61470	0.03462	-0.11370	0.0	0.0	0.0
13/ 22/ 20 (C)	-1.68395	0.03462	-0.11370	0.0	0.0	0.0
13/ 22/ 21 (C)	-2.28228	0.0	-0.18663	0.0	0.0	0.0
13/ 22/ 22 (C)	-2.63693	0.0	-0.18663	0.0	0.0	0.0
13/ 22/ 23 (C)	-5.42315	0.01818	-0.46346	0.0	0.0	0.0
13/ 22/ 24 (C)	-5.46550	0.01818	-0.46346	0.0	0.0	0.0
13/ 22/ 25 (C)	3.24348	0.0	0.30088	0.0	0.0	0.0
13/ 22/ 26 (C)	2.77058	0.0	0.30088	0.0	0.0	0.0
13/ 22/ 27 (C)	-0.95238	0.02424	-0.06822	0.0	0.0	0.0
13/ 22/ 28 (C)	-1.00085	0.02424	-0.06822	0.0	0.0	0.0
13/ 22/ 29 (C)	-2.49077	0.0	-0.15919	0.0	0.0	0.0
13/ 22/ 30 (C)	-4.62584	0.0	-0.36961	0.0	0.0	0.0
13/ 22/ 31 (C)	-6.65708	0.0	-0.58730	0.0	0.0	0.0
13/ 22/ 32 (C)	-7.03538	0.0	-0.58730	0.0	0.0	0.0
13/ 22/ 33 (C)	2.27168	0.0	0.22096	0.0	0.0	0.0
13/ 22/ 34 (C)	1.51504	0.0	0.22096	0.0	0.0	0.0
13/ 22/ 35 (C)	-2.96688	0.03462	-0.22971	0.0	0.0	0.0
13/ 22/ 36 (C)	-3.03613	0.03462	-0.22971	0.0	0.0	0.0
13/ 22/ 37 (C)	5.29631	0.0	0.48824	0.0	0.0	0.0
13/ 22/ 38 (C)	4.53867	0.0	0.48824	0.0	0.0	0.0
13/ 22/ 39 (C)	-1.43679	0.03462	-0.10233	0.0	0.0	0.0
13/ 22/ 40 (C)	-1.50604	0.03462	-0.10233	0.0	0.0	0.0
14/ 22/ 1	-1.03185	0.0	0.04375	0.0	0.0	0.0

Bar/Node/Case	FX (kip)	FY (kip)	FZ (kip)	MX (kip-in)	MY (kip-in)	MZ (kip-in)
14/ 22/ 2	249.08976	0.0	-23.31692	0.0	0.0	0.0
14/ 22/ 3	249.08976	0.0	-23.31692	0.0	0.0	0.0
14/ 22/ 4	249.08976	0.0	-23.31692	0.0	0.0	0.0
14/ 22/ 5	7.21189	0.0	0.0	0.0	0.0	0.0
14/ 22/ 6	-8.08531	0.0	0.0	0.0	0.0	0.0
14/ 22/ 7	87.40889	-23.31692	0.0	0.0	0.0	0.0
14/ 22/ 8	-23.31692	0.0	0.0	0.0	0.0	0.0
14/ 22/ 9 (C)	-1.77912	0.0	0.11370	0.0	0.0	0.0
14/ 22/ 10 (C)	-4.98180	0.0	0.46634	0.0	0.0	0.0
14/ 22/ 11 (C)	4.15505	0.0	-0.36911	0.0	0.0	0.0
14/ 22/ 12 (C)	3.70546	0.0	-0.36911	0.0	0.0	0.0
14/ 22/ 13 (C)	-0.04897	0.0	0.0	0.0	0.0	0.0
14/ 22/ 14 (C)	0.18256	-0.04897	0.0	0.0	0.0	0.0
14/ 22/ 15 (C)	-1.77912	0.0	0.11370	0.0	0.0	0.0
14/ 22/ 16 (C)	-6.76092	0.0	0.58004	0.0	0.0	0.0
14/ 22/ 17 (C)	2.37593	0.0	-0.25540	0.0	0.0	0.0
14/ 22/ 18 (C)	1.92634	0.0	-0.25540	0.0	0.0	0.0
14/ 22/ 19 (C)	-1.82809	0.0	0.11370	0.0	0.0	0.0
14/ 22/ 20 (C)	-1.59556	-0.04897	0.11370	0.0	0.0	0.0
14/ 22/ 21 (C)	-2.39918	0.0	0.18663	0.0	0.0	0.0
14/ 22/ 22 (C)	-2.73637	0.0	0.18663	0.0	0.0	0.0
14/ 22/ 23 (C)	-5.54117	0.0	0.46346	0.0	0.0	0.0
14/ 22/ 24 (C)	-5.41910	-0.02571	0.46346	0.0	0.0	0.0
14/ 22/ 25 (C)	3.08758	0.0	-0.30088	0.0	0.0	0.0
14/ 22/ 26 (C)	2.63799	0.0	-0.30088	0.0	0.0	0.0
14/ 22/ 27 (C)	-1.10175	0.0	0.06822	0.0	0.0	0.0
14/ 22/ 28 (C)	-0.93898	-0.03428	0.06822	0.0	0.0	0.0
14/ 22/ 29 (C)	-2.49077	0.0	0.15919	0.0	0.0	0.0
14/ 22/ 30 (C)	-4.62584	0.0	0.36961	0.0	0.0	0.0
14/ 22/ 31 (C)	-6.78178	0.0	0.58730	0.0	0.0	0.0
14/ 22/ 32 (C)	-7.14145	0.0	0.58730	0.0	0.0	0.0
14/ 22/ 33 (C)	2.02223	0.0	-0.22096	0.0	0.0	0.0
14/ 22/ 34 (C)	1.30290	0.0	-0.22096	0.0	0.0	0.0
14/ 22/ 35 (C)	-3.18007	0.0	0.22971	0.0	0.0	0.0
14/ 22/ 36 (C)	-2.94775	0.04897	0.22971	0.0	0.0	0.0
14/ 22/ 37 (C)	5.04687	0.0	-0.48824	0.0	0.0	0.0

Bar/Node/Case	FX (kip)	FY (kip)	FZ (kip)	MX (kip-in)	MY (kip-in)	MZ (kip-in)
14/ 22/ 38 (C)	4.32753	0.0	-0.48824	0.0	0.0	0.0
14/ 22/ 39 (C)	-1.65217	0.0	0.10233	0.0	0.0	0.0
14/ 22/ 40 (C)	-1.41765	-0.04897	0.10233	0.0	0.0	0.0
14/ 23/ 1	-1.03185	0.0	-0.04375	0.0	0.0	0.0
14/ 23/ 2	249.08976	0.0	23.31692	0.0	0.0	0.0
14/ 23/ 3	249.08976	0.0	23.31692	0.0	0.0	0.0
14/ 23/ 4	249.08976	0.0	23.31692	0.0	0.0	0.0
14/ 23/ 5	7.21189	0.0	0.0	0.0	0.0	0.0
14/ 23/ 6	-8.08531	0.0	0.0	0.0	0.0	0.0
14/ 23/ 7	87.40889	23.31692	0.0	0.0	0.0	0.0
14/ 23/ 8	23.31692	0.0	0.0	0.0	0.0	0.0
14/ 23/ 9 (C)	-1.77912	0.0	-0.11370	0.0	0.0	0.0
14/ 23/ 10 (C)	-4.98180	0.0	-0.46634	0.0	0.0	0.0
14/ 23/ 11 (C)	4.15505	0.0	0.36911	0.0	0.0	0.0
14/ 23/ 12 (C)	3.70548	0.0	0.36911	0.0	0.0	0.0
14/ 23/ 13 (C)	0.04897	0.0	0.0	0.0	0.0	0.0
14/ 23/ 14 (C)	0.18256	0.04897	0.0	0.0	0.0	0.0
14/ 23/ 15 (C)	-1.77912	0.0	-0.11370	0.0	0.0	0.0
14/ 23/ 16 (C)	-6.76092	0.0	-0.58004	0.0	0.0	0.0
14/ 23/ 17 (C)	2.37593	0.0	0.25540	0.0	0.0	0.0
14/ 23/ 18 (C)	1.92634	0.0	0.25540	0.0	0.0	0.0
14/ 23/ 19 (C)	-1.73016	0.0	-0.11370	0.0	0.0	0.0
14/ 23/ 20 (C)	-1.59556	0.04897	-0.11370	0.0	0.0	0.0
14/ 23/ 21 (C)	-2.39918	0.0	-0.18663	0.0	0.0	0.0
14/ 23/ 22 (C)	-2.73637	0.0	-0.18663	0.0	0.0	0.0
14/ 23/ 23 (C)	-5.48976	0.0	-0.46346	0.0	0.0	0.0
14/ 23/ 24 (C)	-5.41910	0.02571	-0.46346	0.0	0.0	0.0
14/ 23/ 25 (C)	3.08758	0.0	0.30088	0.0	0.0	0.0
14/ 23/ 26 (C)	2.63799	0.0	0.30088	0.0	0.0	0.0
14/ 23/ 27 (C)	-1.03320	0.0	-0.06822	0.0	0.0	0.0
14/ 23/ 28 (C)	-0.93898	0.03428	-0.06822	0.0	0.0	0.0
14/ 23/ 29 (C)	-2.49077	0.0	-0.15919	0.0	0.0	0.0
14/ 23/ 30 (C)	-4.62584	0.0	-0.36961	0.0	0.0	0.0
14/ 23/ 31 (C)	-6.78178	0.0	-0.58730	0.0	0.0	0.0
14/ 23/ 32 (C)	-7.14145	0.0	-0.58730	0.0	0.0	0.0
14/ 23/ 33 (C)	2.02223	0.0	0.22096	0.0	0.0	0.0

Bar/Node/Case	FX (kip)	FY (kip)	FZ (kip)	MX (kip-in)	MY (kip-in)	MZ (kip-in)
14/ 23/ 34 (C)	1.30290	0.0	0.22096	0.0	0.0	0.0
14/ 23/ 35 (C)	-3.08234	0.0	-0.22971	0.0	0.0	0.0
14/ 23/ 36 (C)	-2.94775	0.04897	-0.22971	0.0	0.0	0.0
14/ 23/ 37 (C)	5.04687	0.0	0.48824	0.0	0.0	0.0
14/ 23/ 38 (C)	4.32753	0.0	0.48824	0.0	0.0	0.0
14/ 23/ 39 (C)	-1.55224	0.0	-0.10233	0.0	0.0	0.0
14/ 23/ 40 (C)	-1.41765	0.04897	-0.10233	0.0	0.0	0.0
15/ 23/ 1	-1.03185	0.0	0.04375	0.0	0.0	0.0
15/ 23/ 2	249.08976	0.0	-23.31692	0.0	0.0	0.0
15/ 23/ 3	249.08976	0.0	-23.31692	0.0	0.0	0.0
15/ 23/ 4	249.08976	0.0	-23.31692	0.0	0.0	0.0
15/ 23/ 5	-3.56580	0.0	0.0	0.0	0.0	0.0
15/ 23/ 6	-3.57396	0.0	0.0	0.0	0.0	0.0
15/ 23/ 7	45.31987	-16.48755	0.0	0.0	0.0	0.0
15/ 23/ 8	78.29497	16.48755	0.0	0.0	0.0	0.0
15/ 23/ 9 (C)	-1.77912	0.0	0.11370	0.0	0.0	0.0
15/ 23/ 10 (C)	-4.98180	0.0	0.46634	0.0	0.0	0.0
15/ 23/ 11 (C)	3.83856	0.0	-0.36911	0.0	0.0	0.0
15/ 23/ 12 (C)	3.83805	0.0	-0.36911	0.0	0.0	0.0
15/ 23/ 13 (C)	-0.16442	0.03462	0.0	0.0	0.0	0.0
15/ 23/ 14 (C)	0.09517	-0.03462	0.0	0.0	0.0	0.0
15/ 23/ 15 (C)	1.77912	0.0	0.11370	0.0	0.0	0.0
15/ 23/ 16 (C)	-6.76092	0.0	0.58004	0.0	0.0	0.0
15/ 23/ 17 (C)	2.05944	0.0	-0.25540	0.0	0.0	0.0
15/ 23/ 18 (C)	2.05893	0.0	-0.25540	0.0	0.0	0.0
15/ 23/ 19 (C)	-1.94354	0.03462	0.11370	0.0	0.0	0.0
15/ 23/ 20 (C)	-1.68395	-0.03462	0.11370	0.0	0.0	0.0
15/ 23/ 21 (C)	-2.63655	0.0	0.18663	0.0	0.0	0.0
15/ 23/ 22 (C)	-2.63693	0.0	0.18663	0.0	0.0	0.0
15/ 23/ 23 (C)	-5.60179	0.01818	0.46346	0.0	0.0	0.0
15/ 23/ 24 (C)	-5.46550	-0.01818	0.46346	0.0	0.0	0.0
15/ 23/ 25 (C)	2.77108	0.0	-0.30088	0.0	0.0	0.0
15/ 23/ 26 (C)	2.77058	0.0	-0.30088	0.0	0.0	0.0
15/ 23/ 27 (C)	1.18257	0.02424	0.06822	0.0	0.0	0.0
15/ 23/ 28 (C)	-1.00085	-0.02424	0.06822	0.0	0.0	0.0
15/ 23/ 29 (C)	-2.49077	0.0	0.15919	0.0	0.0	0.0

Bar/Node/Case	FX (kip)	FY (kip)	FZ (kip)	MX (kip-in)	MY (kip-in)	MZ (kip-in)
15/ 23/ 30 (C)	-4.62584	0.0	0.36961	0.0	0.0	0.0
15/ 23/ 31 (C)	-7.03497	0.0	0.58730	0.0	0.0	0.0
15/ 23/ 32 (C)	-7.03538	0.0	0.58730	0.0	0.0	0.0
15/ 23/ 33 (C)	1.51585	0.0	-0.22096	0.0	0.0	0.0
15/ 23/ 34 (C)	1.51504	0.0	-0.22096	0.0	0.0	0.0
15/ 23/ 35 (C)	-3.29573	0.03462	0.22971	0.0	0.0	0.0
15/ 23/ 36 (C)	-3.03613	-0.03462	0.22971	0.0	0.0	0.0
15/ 23/ 37 (C)	4.54048	0.0	-0.48824	0.0	0.0	0.0
15/ 23/ 38 (C)	4.53967	0.0	-0.48824	0.0	0.0	0.0
15/ 23/ 39 (C)	-1.76563	0.03462	0.10233	0.0	0.0	0.0
15/ 23/ 40 (C)	-1.50604	-0.03462	0.10233	0.0	0.0	0.0
15/ 24/ 1	-1.03185	0.0	-0.04375	0.0	0.0	0.0
15/ 24/ 2	249.08976	0.0	23.31692	0.0	0.0	0.0
15/ 24/ 3	249.08976	0.0	23.31692	0.0	0.0	0.0
15/ 24/ 4	249.08976	0.0	23.31692	0.0	0.0	0.0
15/ 24/ 5	-3.55680	0.0	0.0	0.0	0.0	0.0
15/ 24/ 6	-3.57396	0.0	0.0	0.0	0.0	0.0
15/ 24/ 7	78.29497	16.48755	0.0	0.0	0.0	0.0
15/ 24/ 8	-45.31987	-16.48755	0.0	0.0	0.0	0.0
15/ 24/ 9 (C)	-1.77912	0.0	-0.11370	0.0	0.0	0.0
15/ 24/ 10 (C)	-4.98180	0.0	-0.46634	0.0	0.0	0.0
15/ 24/ 11 (C)	3.83856	0.0	0.36911	0.0	0.0	0.0
15/ 24/ 12 (C)	3.83809	0.0	0.36911	0.0	0.0	0.0
15/ 24/ 13 (C)	-0.09517	-0.03462	0.0	0.0	0.0	0.0
15/ 24/ 14 (C)	0.16442	0.03462	0.0	0.0	0.0	0.0
15/ 24/ 15 (C)	-1.77912	0.0	-0.11370	0.0	0.0	0.0
15/ 24/ 16 (C)	-6.76092	0.0	-0.58004	0.0	0.0	0.0
15/ 24/ 17 (C)	2.05944	0.0	0.25540	0.0	0.0	0.0
15/ 24/ 18 (C)	2.05893	0.0	0.25540	0.0	0.0	0.0
15/ 24/ 19 (C)	-1.87429	-0.03462	-0.11370	0.0	0.0	0.0
15/ 24/ 20 (C)	-1.61470	0.03462	-0.11370	0.0	0.0	0.0
15/ 24/ 21 (C)	-2.63655	0.0	-0.18563	0.0	0.0	0.0
15/ 24/ 22 (C)	-2.63693	0.0	-0.18563	0.0	0.0	0.0
15/ 24/ 23 (C)	-5.56543	-0.01818	-0.46346	0.0	0.0	0.0
15/ 24/ 24 (C)	-5.42915	0.01818	-0.46346	0.0	0.0	0.0
15/ 24/ 25 (C)	2.77108	0.0	0.30088	0.0	0.0	0.0

Bar/Node/Case	FX (kip)	FY (kip)	FZ (kip)	MX (kip-in)	MY (kip-in)	MZ (kip-in)
15/ 24/ 26 (C)	2.77058	0.0	0.30088	0.0	0.0	0.0
15/ 24/ 27 (C)	-1.13400	-0.02424	-0.06822	0.0	0.0	0.0
15/ 24/ 28 (C)	0.95238	0.02424	-0.06822	0.0	0.0	0.0
15/ 24/ 29 (C)	-2.49077	0.0	-0.15919	0.0	0.0	0.0
15/ 24/ 30 (C)	-4.62584	0.0	-0.36961	0.0	0.0	0.0
15/ 24/ 31 (C)	-7.03497	0.0	-0.58730	0.0	0.0	0.0
15/ 24/ 32 (C)	-7.03538	0.0	-0.58730	0.0	0.0	0.0
15/ 24/ 33 (C)	1.51585	0.0	0.22096	0.0	0.0	0.0
15/ 24/ 34 (C)	1.51504	0.0	0.22096	0.0	0.0	0.0
15/ 24/ 35 (C)	-3.22648	-0.03462	-0.22971	0.0	0.0	0.0
15/ 24/ 36 (C)	-2.96689	0.03462	-0.22971	0.0	0.0	0.0
15/ 24/ 37 (C)	4.54048	0.0	0.48824	0.0	0.0	0.0
15/ 24/ 38 (C)	4.53967	0.0	0.48824	0.0	0.0	0.0
15/ 24/ 39 (C)	-1.69638	-0.03462	-0.10233	0.0	0.0	0.0
15/ 24/ 40 (C)	-1.43679	0.03462	-0.10233	0.0	0.0	0.0
16/ 24/ 1	-1.03185	0.0	0.04375	0.0	0.0	0.0
16/ 24/ 2	249.08976	0.0	-23.31692	0.0	0.0	0.0
16/ 24/ 3	249.08976	0.0	-23.31692	0.0	0.0	0.0
16/ 24/ 4	249.08976	0.0	-23.31692	0.0	0.0	0.0
16/ 24/ 5	-8.06104	0.0	0.0	0.0	0.0	0.0
16/ 24/ 6	7.21189	0.0	0.0	0.0	0.0	0.0
16/ 24/ 7	-23.31692	0.0	0.0	0.0	0.0	0.0
16/ 24/ 8	-87.40889	23.31692	0.0	0.0	0.0	0.0
16/ 24/ 9 (C)	-1.77912	0.0	0.11370	0.0	0.0	0.0
16/ 24/ 10 (C)	-4.98180	0.0	0.46634	0.0	0.0	0.0
16/ 24/ 11 (C)	3.70618	0.0	-0.36911	0.0	0.0	0.0
16/ 24/ 12 (C)	4.15505	0.0	-0.36911	0.0	0.0	0.0
16/ 24/ 13 (C)	-0.18356	0.04897	0.0	0.0	0.0	0.0
16/ 24/ 14 (C)	-0.04807	0.0	0.0	0.0	0.0	0.0
16/ 24/ 15 (C)	-1.77912	0.0	0.11370	0.0	0.0	0.0
16/ 24/ 16 (C)	-6.75092	0.0	0.58004	0.0	0.0	0.0
16/ 24/ 17 (C)	1.92706	0.0	-0.25540	0.0	0.0	0.0
16/ 24/ 18 (C)	2.37593	0.0	-0.25540	0.0	0.0	0.0
16/ 24/ 19 (C)	-1.96268	0.04897	0.11370	0.0	0.0	0.0
16/ 24/ 20 (C)	-1.80809	0.0	0.11370	0.0	0.0	0.0
16/ 24/ 21 (C)	-2.73584	0.0	0.18663	0.0	0.0	0.0

Bar/Node/Case	FX (kip)	FY (kip)	FZ (kip)	MX (kip-in)	MY (kip-in)	MZ (kip-in)
16/ 24/ 22 (C)	-2.39918	0.0	0.18663	0.0	0.0	0.0
16/ 24/ 23 (C)	-5.61184	0.02571	0.46346	0.0	0.0	0.0
16/ 24/ 24 (C)	-5.54117	0.0	0.46346	0.0	0.0	0.0
16/ 24/ 25 (C)	2.63870	0.0	-0.30088	0.0	0.0	0.0
16/ 24/ 26 (C)	3.08758	0.0	-0.30088	0.0	0.0	0.0
16/ 24/ 27 (C)	-1.19596	0.03428	0.06822	0.0	0.0	0.0
16/ 24/ 28 (C)	-1.10175	0.0	0.06822	0.0	0.0	0.0
16/ 24/ 29 (C)	-2.49077	0.0	0.15919	0.0	0.0	0.0
16/ 24/ 30 (C)	-4.62584	0.0	0.36961	0.0	0.0	0.0
16/ 24/ 31 (C)	-7.14088	0.0	0.58730	0.0	0.0	0.0
16/ 24/ 32 (C)	-6.78178	0.0	0.58730	0.0	0.0	0.0
16/ 24/ 33 (C)	1.30404	0.0	-0.22096	0.0	0.0	0.0
16/ 24/ 34 (C)	2.02223	0.0	-0.22096	0.0	0.0	0.0
16/ 24/ 35 (C)	-3.31488	0.04897	0.22971	0.0	0.0	0.0
16/ 24/ 36 (C)	-3.18027	0.0	0.22971	0.0	0.0	0.0
16/ 24/ 37 (C)	4.32867	0.0	-0.48824	0.0	0.0	0.0
16/ 24/ 38 (C)	5.04687	0.0	-0.48824	0.0	0.0	0.0
16/ 24/ 39 (C)	-1.78477	0.04897	0.10233	0.0	0.0	0.0
16/ 24/ 40 (C)	-1.65017	0.0	0.10233	0.0	0.0	0.0
16/ 17/ 1	-1.03185	0.0	-0.04375	0.0	0.0	0.0
16/ 17/ 2	249.08976	0.0	23.31692	0.0	0.0	0.0
16/ 17/ 3	249.08976	0.0	23.31692	0.0	0.0	0.0
16/ 17/ 4	249.08976	0.0	23.31692	0.0	0.0	0.0
16/ 17/ 5	-8.06104	0.0	0.0	0.0	0.0	0.0
16/ 17/ 6	7.21189	0.0	0.0	0.0	0.0	0.0
16/ 17/ 7	23.31692	0.0	0.0	0.0	0.0	0.0
16/ 17/ 8	87.40889	23.31692	0.0	0.0	0.0	0.0
16/ 17/ 9 (C)	-1.77912	0.0	-0.11370	0.0	0.0	0.0
16/ 17/ 10 (C)	-4.98180	0.0	-0.46634	0.0	0.0	0.0
16/ 17/ 11 (C)	3.70618	0.0	0.36911	0.0	0.0	0.0
16/ 17/ 12 (C)	4.15505	0.0	0.36911	0.0	0.0	0.0
16/ 17/ 13 (C)	-0.18356	-0.04897	0.0	0.0	0.0	0.0
16/ 17/ 14 (C)	0.04897	0.0	0.0	0.0	0.0	0.0
16/ 17/ 15 (C)	-1.77912	0.0	-0.11370	0.0	0.0	0.0
16/ 17/ 16 (C)	-6.76092	0.0	-0.58004	0.0	0.0	0.0
16/ 17/ 17 (C)	1.92706	0.0	0.25540	0.0	0.0	0.0

Bar/Node/Case	FX (kip)	FY (kip)	FZ (kip)	MX (kip-in)	MY (kip-in)	MZ (kip-in)
16/ 17/ 18 (C)	2.37593	0.0	0.25540	0.0	0.0	0.0
16/ 17/ 19 (C)	-1.96268	-0.04897	-0.11370	0.0	0.0	0.0
16/ 17/ 20 (C)	-1.73018	0.0	-0.11370	0.0	0.0	0.0
16/ 17/ 21 (C)	-2.73584	0.0	-0.18663	0.0	0.0	0.0
16/ 17/ 22 (C)	-2.39918	0.0	-0.18663	0.0	0.0	0.0
16/ 17/ 23 (C)	-5.61184	-0.02571	-0.46346	0.0	0.0	0.0
16/ 17/ 24 (C)	-5.48978	0.0	-0.46346	0.0	0.0	0.0
16/ 17/ 25 (C)	2.63870	0.0	0.30088	0.0	0.0	0.0
16/ 17/ 26 (C)	3.08758	0.0	0.30088	0.0	0.0	0.0
16/ 17/ 27 (C)	-1.19596	-0.03428	-0.06822	0.0	0.0	0.0
16/ 17/ 28 (C)	-1.03320	0.0	-0.06822	0.0	0.0	0.0
16/ 17/ 29 (C)	-2.49077	0.0	-0.15919	0.0	0.0	0.0
16/ 17/ 30 (C)	-4.62584	0.0	-0.36961	0.0	0.0	0.0
16/ 17/ 31 (C)	-7.14088	0.0	-0.58730	0.0	0.0	0.0
16/ 17/ 32 (C)	-6.78178	0.0	-0.58730	0.0	0.0	0.0
16/ 17/ 33 (C)	1.30404	0.0	0.22096	0.0	0.0	0.0
16/ 17/ 34 (C)	2.02223	0.0	0.22096	0.0	0.0	0.0
16/ 17/ 35 (C)	-3.31488	-0.04897	-0.22971	0.0	0.0	0.0
16/ 17/ 36 (C)	-3.08234	0.0	-0.22971	0.0	0.0	0.0
16/ 17/ 37 (C)	4.32867	0.0	0.48824	0.0	0.0	0.0
16/ 17/ 38 (C)	5.04687	0.0	0.48824	0.0	0.0	0.0
16/ 17/ 39 (C)	-1.78477	-0.04897	-0.10233	0.0	0.0	0.0
16/ 17/ 40 (C)	-1.55224	0.0	-0.10233	0.0	0.0	0.0
17/ 17/ 1	0.83812	-0.00000	0.03812	0.0	0.0	0.0
17/ 17/ 2	-202.33479	0.00000	-8.24269	0.0	0.0	0.0
17/ 17/ 3	-202.33479	0.00000	-8.24269	0.0	0.0	0.0
17/ 17/ 4	-202.33479	0.00000	-8.24269	0.0	0.0	0.0
17/ 17/ 5	15.19427	-0.03559	-0.25865	0.0	0.0	0.0
17/ 17/ 6	-10.30928	-0.71736	-1.12961	0.0	0.0	0.0
17/ 17/ 7	50.17622	5.08814	-5.25435	0.0	0.0	0.0
17/ 17/ 8	121.13611	-2.10758	-12.68512	0.0	0.0	0.0
17/ 17/ 9 (C)	1.44512	-0.00000	0.06285	0.0	0.0	0.0
17/ 17/ 10 (C)	4.04670	-0.00000	0.18485	0.0	0.0	0.0
17/ 17/ 11 (C)	-2.75646	-0.00105	-0.13812	0.0	0.0	0.0
17/ 17/ 12 (C)	-3.50595	-0.02108	-0.16368	0.0	0.0	0.0
17/ 17/ 13 (C)	0.25439	-0.00443	-0.02664	0.0	0.0	0.0

Bar/Node/Case	FX (kip)	FY (kip)	FZ (kip)	MX (kip-in)	MY (kip-in)	MZ (kip-in)
17/ 17/ 14 (C)	0.10537	0.01069	-0.01103	0.0	0.0	0.0
17/ 17/ 15 (C)	1.44512	-0.00000	0.00230	0.0	0.0	0.0
17/ 17/ 16 (C)	5.49182	-0.00000	0.22771	0.0	0.0	0.0
17/ 17/ 17 (C)	-1.31128	-0.00105	-0.07527	0.0	0.0	0.0
17/ 17/ 18 (C)	-2.06083	-0.02108	-0.10083	0.0	0.0	0.0
17/ 17/ 19 (C)	1.69951	-0.00443	0.03621	0.0	0.0	0.0
17/ 17/ 20 (C)	1.55049	0.01069	0.05182	0.0	0.0	0.0
17/ 17/ 21 (C)	2.41264	-0.00078	0.08290	0.0	0.0	0.0
17/ 17/ 22 (C)	1.85068	-0.01581	0.06373	0.0	0.0	0.0
17/ 17/ 23 (C)	4.61369	-0.00232	0.17251	0.0	0.0	0.0
17/ 17/ 24 (C)	4.53546	0.00561	0.18070	0.0	0.0	0.0
17/ 17/ 25 (C)	-1.88923	-0.00105	-0.10041	0.0	0.0	0.0
17/ 17/ 26 (C)	-2.63888	-0.02108	-0.12597	0.0	0.0	0.0
17/ 17/ 27 (C)	1.04514	-0.00310	0.01908	0.0	0.0	0.0
17/ 17/ 28 (C)	0.94083	0.00748	0.02999	0.0	0.0	0.0
17/ 17/ 29 (C)	2.02317	-0.00000	0.08799	0.0	0.0	0.0
17/ 17/ 30 (C)	3.75749	-0.00000	0.15785	0.0	0.0	0.0
17/ 17/ 31 (C)	6.00374	-0.00084	0.22870	0.0	0.0	0.0
17/ 17/ 32 (C)	5.40410	-0.01687	0.20825	0.0	0.0	0.0
17/ 17/ 33 (C)	-0.65275	-0.00167	-0.03314	0.0	0.0	0.0
17/ 17/ 34 (C)	-1.85203	-0.03373	-0.10404	0.0	0.0	0.0
17/ 17/ 35 (C)	2.79787	-0.00443	0.08176	0.0	0.0	0.0
17/ 17/ 36 (C)	2.64885	0.01069	0.09736	0.0	0.0	0.0
17/ 17/ 37 (C)	-3.10963	-0.00167	-0.15443	0.0	0.0	0.0
17/ 17/ 38 (C)	-4.30891	-0.03373	-0.20533	0.0	0.0	0.0
17/ 17/ 39 (C)	1.55499	-0.00443	0.02963	0.0	0.0	0.0
17/ 17/ 40 (C)	1.40598	0.01069	0.04553	0.0	0.0	0.0
17/ 33/ 1	0.53772	0.00000	-0.01998	0.00000	0.91125	0.00000
17/ 33/ 2	-138.88162	-0.00000	5.78162	-0.00000	-124.62111	-0.00000
17/ 33/ 3	-138.88162	-0.00000	5.78162	-0.00000	124.62111	-0.00000
17/ 33/ 4	-138.88162	-0.00000	5.78162	-0.00000	-124.62111	-0.00000
17/ 33/ 5	12.45119	-0.05798	0.58491	-0.00000	16.32637	-4.99917
17/ 33/ 6	-11.15141	0.57610	-0.87026	-0.00000	-100.44259	7.09465
17/ 33/ 7	30.22215	-3.74446	0.89070	0.00000	-219.16226	-67.48587
17/ 33/ 8	72.96273	1.55101	2.15035	-0.00000	-529.10451	27.95356
17/ 33/ 9 (C)	1.05436	0.00000	-0.03727	0.00000	1.28511	0.00000

Bar/Node/Case	FX (kip)	FY (kip)	FZ (kip)	MX (kip-in)	MY (kip-in)	MZ (kip-in)
17/ 33/ 10 (C)	2.77763	0.00000	-0.11523	0.00000	2.49242	0.00000
17/ 33/ 11 (C)	-1.83256	-0.00170	0.10840	-0.00000	-1.49292	0.13811
17/ 33/ 12 (C)	-2.52624	0.01693	0.06563	-0.00000	-4.92476	0.20851
17/ 33/ 13 (C)	0.15322	0.00326	0.00452	-0.00000	-1.11112	0.05870
17/ 33/ 14 (C)	0.06347	-0.00786	0.00187	0.00000	-0.45024	-0.14172
17/ 33/ 15 (C)	1.05436	0.00000	-0.03727	0.00000	1.28511	0.00000
17/ 33/ 16 (C)	3.83200	0.00000	-0.15250	0.00000	3.77754	0.00000
17/ 33/ 17 (C)	-0.77819	-0.00170	0.07113	-0.00000	-0.20781	0.13811
17/ 33/ 18 (C)	-1.47187	0.01693	0.02836	-0.00000	-3.63965	0.20851
17/ 33/ 19 (C)	1.20759	0.00326	-0.03275	-0.00000	0.17399	0.05870
17/ 33/ 20 (C)	1.11783	-0.00786	-0.03539	0.00000	0.82487	-0.14172
17/ 33/ 21 (C)	1.76317	-0.00128	-0.04239	-0.00000	2.03474	0.10358
17/ 33/ 22 (C)	1.24291	0.01270	-0.07447	0.00000	-0.53914	0.15638
17/ 33/ 23 (C)	3.21803	0.00171	-0.12132	-0.00000	2.57109	0.03082
17/ 33/ 24 (C)	3.17091	-0.00413	-0.12271	0.00000	2.91280	-0.07440
17/ 33/ 25 (C)	-1.19994	-0.00170	0.08604	-0.00000	-0.72185	0.13811
17/ 33/ 26 (C)	-1.89362	0.01693	0.04327	-0.00000	-4.15369	0.20851
17/ 33/ 27 (C)	0.73987	0.00228	-0.01920	-0.00000	-0.00672	0.04109
17/ 33/ 28 (C)	0.67704	-0.00550	-0.02105	0.00000	0.44890	-0.09920
17/ 33/ 29 (C)	1.47611	0.00000	-0.05217	0.00000	1.79916	0.00000
17/ 33/ 30 (C)	2.65405	0.00000	-0.10233	0.00000	2.78835	0.00000
17/ 33/ 31 (C)	4.21340	0.00136	-0.14237	0.00000	4.33568	0.11048
17/ 33/ 32 (C)	3.68846	0.01355	-0.17650	0.00000	1.59020	0.16681
17/ 33/ 33 (C)	-0.27804	-0.00273	0.07110	-0.00000	0.39958	0.22097
17/ 33/ 34 (C)	-1.38793	0.02709	0.00267	-0.00000	-5.09127	0.33363
17/ 33/ 35 (C)	1.97398	0.00326	-0.03325	-0.00000	0.92950	0.05870
17/ 33/ 36 (C)	1.88423	-0.00786	-0.03589	0.00000	1.58038	-0.14172
17/ 33/ 37 (C)	-1.98316	-0.00273	0.13990	-0.00000	-1.23207	0.22097
17/ 33/ 38 (C)	-3.09305	0.02709	0.07147	-0.00000	-6.72301	0.33363
17/ 33/ 39 (C)	1.10215	0.00326	-0.02902	-0.00000	0.04549	0.05870
17/ 33/ 40 (C)	1.01239	-0.00786	-0.03167	0.00000	0.69636	-0.14172
18/ 18/ 1	0.93812	-0.00000	0.03812	0.0	0.0	0.0
18/ 18/ 2	-202.33479	0.00000	-8.24289	0.0	0.0	0.0
18/ 18/ 3	-202.33479	0.00000	-8.24289	0.0	0.0	0.0
18/ 18/ 4	-202.33479	0.00000	-8.24289	0.0	0.0	0.0
18/ 18/ 5	2.78205	-0.28931	-1.33467	0.0	0.0	0.0

Bar/Node/Case	FX (kip)	FY (kip)	FZ (kip)	MX (kip-in)	MY (kip-in)	MZ (kip-in)
18/ 18/ 6	-7.78984	-0.46430	2.74267	0.0	0.0	0.0
18/ 18/ 7	121.13611	2.10758	-12.86512	0.0	0.0	0.0
18/ 18/ 8	50.17622	-5.08814	-5.25435	0.0	0.0	0.0
18/ 18/ 9 (C)	1.44512	-0.00000	0.06285	0.0	0.0	0.0
18/ 18/ 10 (C)	4.04670	-0.00000	0.16486	0.0	0.0	0.0
18/ 18/ 11 (C)	-3.12120	-0.00850	-0.16971	0.0	0.0	0.0
18/ 18/ 12 (C)	-3.43193	-0.01365	-0.04988	0.0	0.0	0.0
18/ 18/ 13 (C)	0.10537	-0.01069	-0.01103	0.0	0.0	0.0
18/ 18/ 14 (C)	0.25439	0.00443	-0.02664	0.0	0.0	0.0
18/ 18/ 15 (C)	1.44512	-0.00000	0.06285	0.0	0.0	0.0
18/ 18/ 16 (C)	5.49182	-0.00000	0.22771	0.0	0.0	0.0
18/ 18/ 17 (C)	-1.67809	-0.00850	-0.10888	0.0	0.0	0.0
18/ 18/ 18 (C)	-1.98573	-0.01365	0.01297	0.0	0.0	0.0
18/ 18/ 19 (C)	1.55049	-0.01069	0.05182	0.0	0.0	0.0
18/ 18/ 20 (C)	1.69951	0.00443	0.03621	0.0	0.0	0.0
18/ 18/ 21 (C)	2.13925	-0.00638	0.05921	0.0	0.0	0.0
18/ 18/ 22 (C)	1.90621	-0.01023	0.14909	0.0	0.0	0.0
18/ 18/ 23 (C)	4.53546	-0.00561	0.18070	0.0	0.0	0.0
18/ 18/ 24 (C)	4.61369	0.00232	0.17251	0.0	0.0	0.0
18/ 18/ 25 (C)	-2.25412	-0.00850	-0.13200	0.0	0.0	0.0
18/ 18/ 26 (C)	-2.56483	-0.01365	-0.01217	0.0	0.0	0.0
18/ 18/ 27 (C)	0.94083	-0.00748	0.02999	0.0	0.0	0.0
18/ 18/ 28 (C)	1.04514	0.00310	0.01908	0.0	0.0	0.0
18/ 18/ 29 (C)	2.02317	-0.00000	0.08799	0.0	0.0	0.0
18/ 18/ 30 (C)	3.75749	-0.00000	0.15785	0.0	0.0	0.0
18/ 18/ 31 (C)	5.71190	-0.00680	0.20343	0.0	0.0	0.0
18/ 18/ 32 (C)	5.46333	-0.01092	0.29929	0.0	0.0	0.0
18/ 18/ 33 (C)	-1.23542	-0.01360	-0.11369	0.0	0.0	0.0
18/ 18/ 34 (C)	-1.73355	-0.02183	0.07805	0.0	0.0	0.0
18/ 18/ 35 (C)	2.64885	-0.01069	0.09736	0.0	0.0	0.0
18/ 18/ 36 (C)	2.79787	0.00443	0.08176	0.0	0.0	0.0
18/ 18/ 37 (C)	-3.89330	-0.01360	-0.21407	0.0	0.0	0.0
18/ 18/ 38 (C)	-4.19044	-0.02183	-0.02324	0.0	0.0	0.0
18/ 18/ 39 (C)	1.40598	-0.01069	0.04553	0.0	0.0	0.0
18/ 18/ 40 (C)	1.55499	0.00443	0.02993	0.0	0.0	0.0
18/ 34/ 1	0.53772	0.00000	-0.01998	-0.00000	0.91125	0.00000

Bar/Node/Case	FX (kip)	FY (kip)	FZ (kip)	MX (kip-in)	MY (kip-in)	MZ (kip-in)
18/ 34/ 2	-138.88162	-0.00000	5.78162	0.00000	-124.62111	-0.00000
18/ 34/ 3	-138.88162	-0.00000	5.78162	0.00000	-124.62111	-0.00000
18/ 34/ 4	-138.88162	-0.00000	5.78162	0.00000	-124.62111	-0.00000
18/ 34/ 5	-0.09113	0.06174	-0.44984	0.00000	-89.62626	11.42946
18/ 34/ 6	-0.35146	0.45652	0.45195	-0.00000	160.44830	0.39074
18/ 34/ 7	72.96273	-1.55101	2.15035	0.00000	-529.10451	-27.95356
18/ 34/ 8	30.22215	3.74446	0.89070	0.00000	-219.16226	67.48587
18/ 34/ 9 (C)	1.05436	0.00000	-0.03727	-0.00000	1.28511	0.00000
18/ 34/ 10 (C)	2.77763	0.00000	-0.11523	-0.00000	2.49242	0.00000
18/ 34/ 11 (C)	-2.20117	0.00181	0.07799	0.00000	-4.60687	0.33591
18/ 34/ 12 (C)	-2.20883	0.01342	0.10449	0.00000	2.74282	0.01148
18/ 34/ 13 (C)	0.06347	0.00786	0.00187	0.00000	-0.46024	0.14172
18/ 34/ 14 (C)	0.15322	-0.00326	0.00452	0.00000	-1.11112	-0.05870
18/ 34/ 15 (C)	1.05436	0.00000	-0.03727	-0.00000	1.28511	0.00000
18/ 34/ 16 (C)	3.83200	0.00000	-0.15250	-0.00000	3.77754	0.00000
18/ 34/ 17 (C)	-1.14681	0.00181	0.04072	0.00000	-3.32175	0.33591
18/ 34/ 18 (C)	-1.15446	0.01342	0.06722	0.00000	4.02794	0.01148
18/ 34/ 19 (C)	1.11783	0.00786	-0.03539	-0.00000	0.82487	0.14172
18/ 34/ 20 (C)	1.20759	-0.00326	-0.03275	-0.00000	0.17399	-0.05870
18/ 34/ 21 (C)	1.48871	0.00136	-0.06520	-0.00000	-0.30072	0.25193
18/ 34/ 22 (C)	1.48097	0.01006	-0.04532	-0.00000	5.21155	0.00861
18/ 34/ 23 (C)	3.17091	0.00413	-0.12271	-0.00000	2.91280	0.07440
18/ 34/ 24 (C)	3.21803	-0.00171	-0.12132	-0.00000	2.57109	-0.03082
18/ 34/ 25 (C)	-1.56856	0.00181	0.05563	0.00000	-3.83580	0.33591
18/ 34/ 26 (C)	-1.57621	0.01342	0.08213	0.00000	3.51389	0.01148
18/ 34/ 27 (C)	0.67704	0.00550	-0.02105	-0.00000	0.44890	0.09920
18/ 34/ 28 (C)	0.73987	-0.00228	-0.01920	-0.00000	-0.00672	-0.04109
18/ 34/ 29 (C)	1.47611	0.00000	-0.05217	-0.00000	1.79916	0.00000
18/ 34/ 30 (C)	2.65405	0.00000	-0.10233	-0.00000	2.78835	0.00000
18/ 34/ 31 (C)	3.94851	0.00145	-0.16670	-0.00000	1.84452	0.26873
18/ 34/ 32 (C)	3.94239	0.01073	0.14550	-0.00000	7.72427	0.00919
18/ 34/ 33 (C)	-0.86783	0.00290	0.02244	0.00000	-4.58264	0.53746
18/ 34/ 34 (C)	-0.88007	0.02147	0.06485	-0.00000	7.17687	0.01837
18/ 34/ 35 (C)	1.88423	0.00786	-0.06589	-0.00000	1.58038	0.14172
18/ 34/ 36 (C)	1.97398	-0.00326	-0.06325	-0.00000	0.92950	-0.05870
18/ 34/ 37 (C)	-2.57295	0.00290	0.09124	0.00000	-6.21439	0.53746

Bar/Node/Case	FX (kip)	FY (kip)	FZ (kip)	MX (kip-in)	MY (kip-in)	MZ (kip-in)
18/ 34/ 39 (C)	-2.58519	0.02147	0.13364	0.00000	5.54512	0.01837
18/ 34/ 39 (C)	1.01239	0.00786	-0.03187	-0.00000	0.69636	0.14172
18/ 34/ 40 (C)	1.10215	-0.00326	-0.02902	-0.00000	0.04548	-0.05870
19/ 19/ 1	0.83812	-0.00000	0.03812	0.0	0.0	0.0
19/ 19/ 2	-202.33479	0.00000	-9.24289	0.0	0.0	0.0
19/ 19/ 3	-202.33479	0.00000	-9.24289	0.0	0.0	0.0
19/ 19/ 4	-202.33479	0.00000	-9.24289	0.0	0.0	0.0
19/ 19/ 5	-10.28555	-0.71849	-1.12816	0.0	0.0	0.0
19/ 19/ 6	-7.76984	0.46430	2.74267	0.0	0.0	0.0
19/ 19/ 7	-121.13611	-2.10758	-12.68512	0.0	0.0	0.0
19/ 19/ 8	-50.17622	-5.08814	5.25435	0.0	0.0	0.0
19/ 19/ 9 (C)	1.44512	-0.00000	0.05285	0.0	0.0	0.0
19/ 19/ 10 (C)	4.04670	-0.00000	0.15486	0.0	0.0	0.0
19/ 19/ 11 (C)	-3.50555	-0.02112	-0.15364	0.0	0.0	0.0
19/ 19/ 12 (C)	-3.43190	0.01365	-0.04988	0.0	0.0	0.0
19/ 19/ 13 (C)	-0.10537	-0.01069	0.01103	0.0	0.0	0.0
19/ 19/ 14 (C)	0.25439	-0.00443	-0.02664	0.0	0.0	0.0
19/ 19/ 15 (C)	1.44512	-0.00000	0.05285	0.0	0.0	0.0
19/ 19/ 16 (C)	5.49182	-0.00000	0.22771	0.0	0.0	0.0
19/ 19/ 17 (C)	-2.08043	-0.02112	-0.10079	0.0	0.0	0.0
19/ 19/ 18 (C)	-1.98678	0.01365	0.01297	0.0	0.0	0.0
19/ 19/ 19 (C)	1.33975	-0.01069	0.07389	0.0	0.0	0.0
19/ 19/ 20 (C)	1.63951	-0.00443	0.03621	0.0	0.0	0.0
19/ 19/ 21 (C)	1.85098	-0.01584	0.05376	0.0	0.0	0.0
19/ 19/ 22 (C)	1.90621	0.01023	0.14909	0.0	0.0	0.0
19/ 19/ 23 (C)	4.42482	-0.00561	0.19229	0.0	0.0	0.0
19/ 19/ 24 (C)	4.61369	-0.00232	0.17251	0.0	0.0	0.0
19/ 19/ 25 (C)	-2.63847	-0.02112	-0.12593	0.0	0.0	0.0
19/ 19/ 26 (C)	-2.56483	0.01365	-0.01217	0.0	0.0	0.0
19/ 19/ 27 (C)	0.79331	-0.00748	0.04544	0.0	0.0	0.0
19/ 19/ 28 (C)	1.04514	-0.00310	0.01909	0.0	0.0	0.0
19/ 19/ 29 (C)	2.02317	-0.00000	0.08799	0.0	0.0	0.0
19/ 19/ 30 (C)	3.75749	-0.00000	0.15785	0.0	0.0	0.0
19/ 19/ 31 (C)	5.40442	-0.01689	0.20828	0.0	0.0	0.0
19/ 19/ 32 (C)	5.46333	0.01092	0.29929	0.0	0.0	0.0
19/ 19/ 33 (C)	-1.85138	-0.02379	-0.10369	0.0	0.0	0.0

Bar/Node/Case	FX (kip)	FY (kip)	FZ (kip)	MX (kip-in)	MY (kip-in)	MZ (kip-in)
19/ 19/ 34 (C)	-1.73355	0.02183	0.07805	0.0	0.0	0.0
19/ 19/ 35 (C)	2.43611	-0.01069	0.11943	0.0	0.0	0.0
19/ 19/ 36 (C)	2.79797	-0.00443	0.06776	0.0	0.0	0.0
19/ 19/ 37 (C)	-4.30827	-0.03379	-0.20526	0.0	0.0	0.0
19/ 19/ 38 (C)	-4.10044	0.02183	-0.02324	0.0	0.0	0.0
19/ 19/ 39 (C)	1.10524	-0.01069	0.06760	0.0	0.0	0.0
19/ 19/ 40 (C)	1.55499	-0.00443	0.02993	0.0	0.0	0.0
19/ 35/ 1	0.63772	0.00000	-0.01998	0.00000	0.91125	0.00000
19/ 35/ 2	-138.88162	-0.00000	5.76162	0.00000	-124.62111	-0.00000
19/ 35/ 3	-138.88162	-0.00000	5.76162	0.00000	-124.62111	-0.00000
19/ 35/ 4	-138.88162	-0.00000	5.76162	-0.00000	-124.62111	-0.00000
19/ 35/ 5	-11.13024	0.57634	-0.66909	0.00000	-100.29171	7.13987
19/ 35/ 6	-0.35148	-0.45652	0.45195	0.00000	160.44830	-0.39074
19/ 35/ 7	72.96273	1.55101	2.15035	-0.00000	-529.10451	27.95358
19/ 35/ 8	-30.22215	3.74446	-0.89070	0.00000	219.16226	67.48587
19/ 35/ 9 (C)	1.05436	0.00000	-0.03727	0.00000	1.28511	0.00000
19/ 35/ 10 (C)	2.77763	0.00000	-0.11523	0.00000	2.49242	0.00000
19/ 35/ 11 (C)	-2.52585	0.01694	0.06568	0.00000	-4.92033	0.20983
19/ 35/ 12 (C)	-2.20883	-0.01342	0.10449	0.00000	2.74282	-0.01148
19/ 35/ 13 (C)	-0.06347	0.00786	-0.00187	0.00000	0.46024	0.14172
19/ 35/ 14 (C)	0.15322	0.00326	0.00452	-0.00000	-1.11112	0.05870
19/ 35/ 15 (C)	1.05436	0.00000	-0.03727	0.00000	1.28511	0.00000
19/ 35/ 16 (C)	3.83200	0.00000	-0.15250	0.00000	3.77754	0.00000
19/ 35/ 17 (C)	-1.47149	0.01694	0.02841	0.00000	-3.63521	0.20983
19/ 35/ 18 (C)	-1.15446	-0.01342	0.06722	0.00000	4.02794	-0.01148
19/ 35/ 19 (C)	0.99090	0.00786	-0.03914	0.00000	1.74535	0.14172
19/ 35/ 20 (C)	1.20759	0.00326	-0.03275	-0.00000	0.17399	0.05870
19/ 35/ 21 (C)	1.24320	0.01270	-0.07443	0.00000	-0.53581	0.15738
19/ 35/ 22 (C)	1.48097	-0.01006	-0.04532	0.00000	5.21155	-0.00861
19/ 35/ 23 (C)	3.10427	0.00413	-0.12457	0.00000	3.39806	0.07440
19/ 35/ 24 (C)	3.21803	0.00171	-0.12132	0.00000	2.57109	0.03082
19/ 35/ 25 (C)	-1.89323	0.01694	0.04332	0.00000	-4.14926	0.20983
19/ 35/ 26 (C)	-1.57621	-0.01342	0.08213	0.00000	3.51389	-0.01148
19/ 35/ 27 (C)	0.98819	0.00550	-0.02357	0.00000	1.09324	0.09920
19/ 35/ 28 (C)	0.73987	0.00228	-0.01920	-0.00000	-0.00672	0.04109
19/ 35/ 29 (C)	1.47811	0.00000	-0.05217	0.00000	1.78918	0.00000

Bar/Node/Case	FX (kip)	FY (kip)	FZ (kip)	MX (kip-in)	MY (kip-in)	MZ (kip-in)
19/ 35/ 30 (C)	2.65405	0.00000	-0.10239	0.00000	2.78835	0.00000
19/ 35/ 31 (C)	3.68877	0.01355	-0.17655	0.00000	1.59375	0.16787
19/ 35/ 32 (C)	3.94239	-0.01073	-0.14550	0.00000	7.72427	-0.00919
19/ 35/ 33 (C)	-1.38731	0.02710	0.00275	0.00000	-5.08417	0.33574
19/ 35/ 34 (C)	-0.88007	-0.02147	0.06485	0.00000	7.17687	-0.01837
19/ 35/ 35 (C)	1.75730	0.00786	-0.06964	0.00000	2.50086	0.14172
19/ 35/ 36 (C)	1.97398	0.00326	-0.06325	-0.00000	0.92950	0.05870
19/ 35/ 37 (C)	-3.09243	0.02710	0.07154	0.00000	-6.71592	0.33574
19/ 35/ 38 (C)	-2.58519	-0.02147	0.13364	0.00000	5.54512	-0.01837
19/ 35/ 39 (C)	0.88546	0.00786	-0.03541	0.00000	1.51684	0.14172
19/ 35/ 40 (C)	1.10215	0.00326	-0.02902	-0.00000	0.04548	0.05870
20/ 20/ 1	0.83812	-0.00000	0.03812	0.0	0.0	0.0
20/ 20/ 2	-202.33479	0.00000	-9.24289	0.0	0.0	0.0
20/ 20/ 3	-202.33479	0.00000	-9.24289	0.0	0.0	0.0
20/ 20/ 4	-202.33479	0.00000	-9.24289	0.0	0.0	0.0
20/ 20/ 5	-7.75673	-0.46477	2.74609	0.0	0.0	0.0
20/ 20/ 6	-10.30926	0.71738	-1.12961	0.0	0.0	0.0
20/ 20/ 7	50.17622	-5.08814	-5.25435	0.0	0.0	0.0
20/ 20/ 8	-121.13611	-2.10758	12.68512	0.0	0.0	0.0
20/ 20/ 9 (C)	1.44512	0.00000	0.06285	0.0	0.0	0.0
20/ 20/ 10 (C)	4.04670	0.00000	0.16486	0.0	0.0	0.0
20/ 20/ 11 (C)	-3.43693	-0.01368	-0.04978	0.0	0.0	0.0
20/ 20/ 12 (C)	-3.50595	0.02108	-0.16368	0.0	0.0	0.0
20/ 20/ 13 (C)	-0.25439	-0.00443	0.03664	0.0	0.0	0.0
20/ 20/ 14 (C)	0.10537	-0.01069	-0.01103	0.0	0.0	0.0
20/ 20/ 15 (C)	1.44512	-0.00000	0.06285	0.0	0.0	0.0
20/ 20/ 16 (C)	5.49182	-0.00000	0.22771	0.0	0.0	0.0
20/ 20/ 17 (C)	-1.98581	-0.01368	0.01308	0.0	0.0	0.0
20/ 20/ 18 (C)	-2.06083	0.02108	-0.10089	0.0	0.0	0.0
20/ 20/ 19 (C)	1.19073	-0.00443	0.08949	0.0	0.0	0.0
20/ 20/ 20 (C)	1.55049	-0.01069	0.05182	0.0	0.0	0.0
20/ 20/ 21 (C)	1.90694	-0.01024	0.14919	0.0	0.0	0.0
20/ 20/ 22 (C)	1.85068	0.01581	0.06373	0.0	0.0	0.0
20/ 20/ 23 (C)	4.34859	-0.00232	0.20048	0.0	0.0	0.0
20/ 20/ 24 (C)	4.53548	-0.00561	0.18070	0.0	0.0	0.0
20/ 20/ 25 (C)	-2.56386	-0.01368	-0.01207	0.0	0.0	0.0

Bar/Node/Case	FX (kip)	FY (kip)	FZ (kip)	MX (kip-in)	MY (kip-in)	MZ (kip-in)
20/ 20/ 26 (C)	-2.63888	0.02108	-0.12597	0.0	0.0	0.0
20/ 20/ 27 (C)	0.88900	-0.00310	0.05636	0.0	0.0	0.0
20/ 20/ 28 (C)	0.94083	-0.00748	0.02999	0.0	0.0	0.0
20/ 20/ 29 (C)	2.02317	-0.00000	0.08799	0.0	0.0	0.0
20/ 20/ 30 (C)	3.75749	-0.00000	0.15785	0.0	0.0	0.0
20/ 20/ 31 (C)	5.46411	-0.01093	0.29937	0.0	0.0	0.0
20/ 20/ 32 (C)	5.40410	0.01697	0.20825	0.0	0.0	0.0
20/ 20/ 33 (C)	-1.73200	-0.02186	0.07821	0.0	0.0	0.0
20/ 20/ 34 (C)	-1.65203	0.03373	-0.10404	0.0	0.0	0.0
20/ 20/ 35 (C)	2.28910	-0.00443	0.13503	0.0	0.0	0.0
20/ 20/ 36 (C)	2.64885	-0.01069	0.06736	0.0	0.0	0.0
20/ 20/ 37 (C)	-4.18988	-0.02186	-0.02308	0.0	0.0	0.0
20/ 20/ 38 (C)	-4.30891	0.03373	-0.20533	0.0	0.0	0.0
20/ 20/ 39 (C)	1.04622	-0.00443	0.06321	0.0	0.0	0.0
20/ 20/ 40 (C)	1.40898	-0.01069	0.04553	0.0	0.0	0.0
20/ 36/ 1	0.63772	0.00000	-0.01998	-0.00000	0.91125	0.00000
20/ 36/ 2	-138.88162	-0.00000	5.76162	0.00000	-124.62111	-0.00000
20/ 36/ 3	-138.88162	-0.00000	5.76162	0.00000	-124.62111	-0.00000
20/ 36/ 4	-138.88162	-0.00000	5.76162	0.00000	-124.62111	-0.00000
20/ 36/ 5	-0.31967	0.45682	0.45578	-0.00000	160.01257	0.40938
20/ 36/ 6	-11.15141	-0.57610	-0.87026	0.00000	-100.44259	-7.09485
20/ 36/ 7	30.22215	3.74446	0.89070	0.00000	-219.16226	67.48587
20/ 36/ 8	72.96273	1.55101	2.15035	-0.00000	529.10451	27.95358
20/ 36/ 9 (C)	1.05436	0.00000	-0.03727	0.00000	1.28511	0.00000
20/ 36/ 10 (C)	2.77763	0.00000	-0.11523	-0.00000	2.49242	0.00000
20/ 36/ 11 (C)	-2.20789	0.01342	0.10460	0.00000	2.75353	0.01203
20/ 36/ 12 (C)	-2.52524	-0.01693	0.06563	0.00000	-4.92476	-0.20851
20/ 36/ 13 (C)	-0.15322	0.00326	-0.00452	-0.00000	1.11112	0.05870
20/ 36/ 14 (C)	0.06347	0.00786	0.00187	0.00000	-0.46024	0.14172
20/ 36/ 15 (C)	1.05436	0.00000	-0.03727	-0.00000	1.28511	-0.00000
20/ 36/ 16 (C)	3.83200	0.00000	-0.15250	-0.00000	3.77754	0.00000
20/ 36/ 17 (C)	-1.15353	0.01342	0.06734	0.00000	4.03864	0.01203
20/ 36/ 18 (C)	-1.47187	-0.01693	0.02836	0.00000	-3.63965	-0.20851
20/ 36/ 19 (C)	0.90114	0.00326	-0.04178	-0.00000	2.39623	0.05870
20/ 36/ 20 (C)	1.11783	0.00786	-0.03539	-0.00000	0.82487	0.14172
20/ 36/ 21 (C)	1.48167	0.01007	-0.04524	-0.00000	5.21958	0.00902

Bar/Node/Case	FX (kip)	FY (kip)	FZ (kip)	MX (kip-in)	MY (kip-in)	MZ (kip-in)
20/ 36/ 22 (C)	1.24291	-0.01270	-0.07447	-0.00000	-0.53614	-0.15338
20/ 36/ 23 (C)	3.05715	0.00171	-0.12308	-0.00000	3.73777	0.02382
20/ 36/ 24 (C)	3.17091	0.00413	-0.12271	-0.00000	2.91280	0.07446
20/ 36/ 25 (C)	-1.57527	0.01342	0.08224	0.00000	3.52460	0.01203
20/ 36/ 26 (C)	-1.89362	-0.01693	0.04327	0.00000	-4.15369	-0.20851
20/ 36/ 27 (C)	0.52536	0.00228	-0.02552	-0.00000	1.54885	0.04109
20/ 36/ 28 (C)	0.87704	0.00550	-0.02109	-0.00000	0.44890	0.09920
20/ 36/ 29 (C)	1.476[illegible]1	0.00000	-0.05217	-0.00000	1.79916	0.00000
20/ 36/ 30 (C)	2.85405	0.00000	-0.10233	-0.00000	2.78835	0.00000
20/ 36/ 31 (C)	3.94314	0.01074	-0.14541	-0.00000	7.73284	0.00983
20/ 36/ 32 (C)	3.68846	-0.01355	-0.17559	-0.00000	1.59023	-0.16681
20/ 36/ 33 (C)	-0.87857	0.02147	0.06503	-0.00000	7.19399	0.01925
20/ 36/ 34 (C)	-1.38793	-0.02709	0.00267	0.00000	-5.69127	-0.33363
20/ 36/ 35 (C)	1.66754	0.00326	-0.07228	0.00000	3.15174	0.05876
20/ 36/ 36 (C)	1.88423	0.00786	-0.06568	-0.00000	1.58038	0.14172
20/ 36/ 37 (C)	-2.58370	0.02147	0.13382	0.00000	5.56225	0.01925
20/ 36/ 38 (C)	-3.09305	-0.02709	0.07147	0.00000	-6.72301	-0.33363
20/ 36/ 39 (C)	0.79571	0.00326	-0.03805	-0.00000	2.26772	0.05870
20/ 36/ 40 (C)	1.01239	0.00786	-0.03163	-0.00000	0.89838	0.14172
21/ 21/ 1	0.83812	-0.00000	0.03812	0.0	0.0	0.0
21/ 21/ 2	-202.33479	0.00000	-8.24289	0.0	0.0	0.0
21/ 21/ 3	-202.33479	0.00000	-8.24289	0.0	0.0	0.0
21/ 21/ 4	-202.33479	0.00000	-8.24289	0.0	0.0	0.0
21/ 21/ 5	7.75673	0.46477	2.74609	0.0	0.0	0.0
21/ 21/ 6	2.79577	0.28817	-1.33325	0.0	0.0	0.0
21/ 21/ 7	-50.17622	-5.08814	5.25435	0.0	0.0	0.0
21/ 21/ 8	-121.13611	2.10758	-2.68512	0.0	0.0	0.0
21/ 21/ 9 (C)	1.44512	-0.00000	0.06285	0.0	0.0	0.0
21/ 21/ 10 (C)	4.04670	-0.00000	0.16488	0.0	0.0	0.0
21/ 21/ 11 (C)	-3.43093	0.01356	-0.04978	0.0	0.0	0.0
21/ 21/ 12 (C)	-3.12079	0.00847	-0.16967	0.0	0.0	0.0
21/ 21/ 13 (C)	-0.25439	0.00443	0.02664	0.0	0.0	0.0
21/ 21/ 14 (C)	-0.10537	-0.01069	0.01103	0.0	0.0	0.0
21/ 21/ 15 (C)	1.44512	-0.00000	0.06285	0.0	0.0	0.0
21/ 21/ 16 (C)	5.49182	-0.00000	0.22771	0.0	0.0	0.0
21/ 21/ 17 (C)	-1.98581	0.01356	0.01308	0.0	0.0	0.0

Bar/Node/Case	FX (kip)	FY (kip)	FZ (kip)	MX (kip-in)	MY (kip-in)	MZ (kip-in)
21/ 21/ 18 (C)	-1.67567	0.00847	0.[illegible]0682	0.0	0.0	0.0
21/ 21/ 19 (C)	1.19073	0.00443	0.08949	0.0	0.0	0.0
21/ 21/ 20 (C)	1.33975	-0.01069	0.07389	0.0	0.0	0.0
21/ 21/ 21 (C)	1.98694	0.01024	0.74916	0.0	0.0	0.0
21/ 21/ 22 (C)	2.13955	0.00635	0.05924	0.0	0.0	0.0
21/ 21/ 23 (C)	4.34659	0.00232	0.20048	0.0	0.0	0.0
21/ 21/ 24 (C)	4.42482	-0.00561	0.19229	0.0	0.0	0.0
21/ 21/ 25 (C)	-2.58366	0.01366	-0.01207	0.0	0.0	0.0
21/ 21/ 26 (C)	-2.25372	0.00847	-0.13196	0.0	0.0	0.0
21/ 21/ 27 (C)	0.68900	0.00310	0.05636	0.0	0.0	0.0
21/ 21/ 28 (C)	0.79331	-0.00748	0.04544	0.0	0.0	0.0
21/ 21/ 29 (C)	2.02317	-0.00000	0.08799	0.0	0.0	0.0
21/ 21/ 30 (C)	3.75749	0.00000	0.15785	0.0	0.0	0.0
21/ 21/ 31 (C)	5.40411	0.01093	0.29937	0.0	0.0	0.0
21/ 21/ 32 (C)	5.7[illegible]222	0.00678	0.20946	0.0	0.0	0.0
21/ 21/ 33 (C)	-1.73200	0.02186	0.07821	0.0	0.0	0.0
21/ 21/ 34 (C)	-1.23578	0.01355	-0.11362	0.0	0.0	0.0
21/ 21/ 35 (C)	2.28910	0.00443	0.13503	0.0	0.0	0.0
21/ 21/ 36 (C)	2.43811	-0.01069	0.11943	0.0	0.0	0.0
21/ 21/ 37 (C)	-4.18888	0.02186	-0.02308	0.0	0.0	0.0
21/ 21/ 38 (C)	-3.69266	0.01355	-0.21490	0.0	0.0	0.0
21/ 21/ 39 (C)	1.04622	0.00443	0.08321	0.0	0.0	0.0
21/ 21/ 40 (C)	1.19524	-0.01069	0.06760	0.0	0.0	0.0
21/ 37/ 1	0.63772	0.00000	-0.01998	0.00000	0.91125	0.00000
21/ 37/ 2	-138.88162	-0.00000	5.76162	-0.00000	-124.62111	-0.00000
21/ 37/ 3	-138.88162	-0.00000	5.76162	-0.00000	-124.62111	-0.00000
21/ 37/ 4	-138.88162	-0.00000	5.76162	-0.00000	-124.62111	-0.00000
21/ 37/ 5	-0.31967	-0.45662	0.45578	-0.00000	160.81257	-0.40938
21/ 37/ 6	-0.07796	-0.06150	-0.44826	-0.00000	-89.47537	-11.38444
21/ 37/ 7	30.22215	3.74448	-0.89070	0.00000	219.16226	67.49587
21/ 37/ 8	-72.96273	-[illegible].55101	-2.15035	-0.00000	529.10451	-27.95356
21/ 37/ 9 (C)	1.05436	0.00000	-0.03727	0.00000	1.28511	0.00000
21/ 37/ 10 (C)	2.77763	0.00000	-0.11523	0.00000	2.49242	0.00000
21/ 37/ 11 (C)	-2.20789	-0.01342	0.10460	-0.00000	2.75353	-0.0[illegible]203
21/ 37/ 12 (C)	-2.20079	-0.00181	0.07803	-0.00000	-4.60243	-0.33459
21/ 37/ 13 (C)	-0.15322	-0.00328	-0.00452	-0.00000	1.11112	-0.05870

Bar/Node/Case	FX (kip)	FY (kip)	FZ (kip)	MX (kip-in)	MY (kip-in)	MZ (kip-in)
21/ 37/ 14 (C)	-0.08347	0.00786	-0.00187	0.00000	0.45024	0.14172
21/ 37/ 15 (C)	1.05436	0.00000	-0.03727	0.00000	1.28511	0.00000
21/ 37/ 16 (C)	3.83200	0.00000	-0.15250	0.00000	3.77754	0.00000
21/ 37/ 17 (C)	1.15353	-0.01342	0.06734	-0.00000	4.03064	-0.01203
21/ 37/ 18 (C)	-1.14642	-0.00181	0.04077	-0.00000	-3.31732	-0.33459
21/ 37/ 19 (C)	0.90114	-0.00328	-0.04179	-0.00000	2.39623	-0.05870
21/ 37/ 20 (C)	0.99390	0.00786	-0.03614	0.00000	1.74535	0.14172
21/ 37/ 21 (C)	1.48167	-0.01007	-0.04524	-0.00000	5.21958	-0.00902
21/ 37/ 22 (C)	1.48708	-0.00136	-0.06517	-0.00000	-0.29739	0.25094
21/ 37/ 23 (C)	3.05715	-0.00171	-0.12608	0.00000	3.73777	-0.02082
21/ 37/ 24 (C)	3.10427	0.004[illegible]3	-0.12467	0.00000	3.38606	0.07446
21/ 37/ 25 (C)	-1.57527	-0.01342	0.08224	-0.00000	3.52460	-0.01203
21/ 37/ 26 (C)	-1.56817	-0.00181	0.05567	-0.00000	-3.93137	-0.33459
21/ 37/ 27 (C)	0.52536	-0.00228	-0.02552	-0.00000	1.54885	-0.04109
21/ 37/ 28 (C)	0.58814	0.00550	-0.02367	0.00000	1.09324	0.09920
21/ 37/ 29 (C)	1.47811	0.00000	-0.05217	0.00000	1.79916	0.00000
21/ 37/ 30 (C)	2.85405	0.00000	-0.10233	0.00000	2.78835	0.00000
21/ 37/ 31 (C)	3.94314	-0.0[illegible]074	-0.14541	-0.00000	7.73284	-0.00983
21/ 37/ 32 (C)	3.94882	-0.00145	-0.18666	-0.00000	1.84807	-0.26787
21/ 37/ 33 (C)	-0.87857	-0.02147	0.06503	-0.00000	7.19399	-0.01925
21/ 37/ 34 (C)	-0.86721	-0.00289	0.02252	-0.00000	-4.57555	-0.53534
21/ 37/ 35 (C)	1.66754	-0.00326	-0.07228	-0.00000	3.15174	-0.05870
21/ 37/ 36 (C)	1.75730	0.00786	-0.06964	0.00000	2.50086	0.14172
21/ 37/ 37 (C)	-2.58370	-0.02147	0.13382	-0.00000	5.56225	-0.01925
21/ 37/ 38 (C)	-2.57233	-0.00289	0.09131	-0.00000	-6.20729	-0.53534
21/ 37/ 39 (C)	0.79571	-0.00326	-0.03805	-0.00000	2.26772	-0.05870
21/ 37/ 40 (C)	0.88548	0.00786	-0.03541	0.00000	1.61884	0.14172
22/ 22/ 1	0.83812	-0.00000	0.03812	0.0	0.0	0.0
22/ 22/ 2	-202.33479	0.00000	-8.24289	0.0	0.0	0.0
22/ 22/ 3	-202.33479	0.00000	-8.24289	0.0	0.0	0.0
22/ 22/ 4	-202.33479	0.00000	-8.24289	0.0	0.0	0.0
22/ 22/ 5	-10.29555	0.71849	-1.12819	0.0	0.0	0.0
22/ 22/ 6	15.22738	0.03512	-0.25642	0.0	0.0	0.0
22/ 22/ 7	-121.13611	-2.10758	12.68512	0.0	0.0	0.0
22/ 22/ 8	-50.17622	5.08814	5.25435	0.0	0.0	0.0
22/ 22/ 9 (C)	1.44512	-0.00000	0.06285	0.0	0.0	0.0

Bar/Node/Case	FX (kip)	FY (kip)	FZ (kip)	MX (kip-in)	MY (kip-in)	MZ (kip-in)
22/ 22/ 10 (C)	4.04670	-0.00000	0.16488	0.0	0.0	0.0
22/ 22/ 11 (C)	-3.50555	0.02112	-0.16384	0.0	0.0	0.0
22/ 22/ 12 (C)	-2.75543	0.00103	-0.13802	0.0	0.0	0.0
22/ 22/ 13 (C)	-0.10537	0.01069	0.01103	0.0	0.0	0.0
22/ 22/ 14 (C)	-0.25439	-0.00443	0.02664	0.0	0.0	0.0
22/ 22/ 15 (C)	1.44512	-0.00000	0.06285	0.0	0.0	0.0
22/ 22/ 16 (C)	5.49182	-0.00000	0.22771	0.0	0.0	0.0
22/ 22/ 17 (C)	-2.06043	0.02112	-0.10079	0.0	0.0	0.0
22/ 22/ 18 (C)	-1.31031	0.00103	-0.07517	0.0	0.0	0.0
22/ 22/ 19 (C)	1.33975	0.01069	0.07389	0.0	0.0	0.0
22/ 22/ 20 (C)	1.19073	-0.00443	0.08949	0.0	0.0	0.0
22/ 22/ 21 (C)	1.85098	0.01584	0.06376	0.0	0.0	0.0
22/ 22/ 22 (C)	2.41357	0.00077	0.08298	0.0	0.0	0.0
22/ 22/ 23 (C)	4.42482	0.00561	0.19229	0.0	0.0	0.0
22/ 22/ 24 (C)	4.34659	-0.00232	0.20048	0.0	0.0	0.0
22/ 22/ 25 (C)	-2.63847	0.02112	-0.12593	0.0	0.0	0.0
22/ 22/ 26 (C)	-1.88836	0.00103	-0.10031	0.0	0.0	0.0
22/ 22/ 27 (C)	0.79331	0.00748	0.04544	0.0	0.0	0.0
22/ 22/ 28 (C)	0.68900	-0.00310	0.05636	0.0	0.0	0.0
22/ 22/ 29 (C)	2.02317	-0.00000	0.08799	0.0	0.0	0.0
22/ 22/ 30 (C)	3.75749	-0.00000	0.15785	0.0	0.0	0.0
22/ 22/ 31 (C)	5.40442	0.01689	0.20828	0.0	0.0	0.0
22/ 22/ 32 (C)	6.00452	0.00083	0.22878	0.0	0.0	0.0
22/ 22/ 33 (C)	-1.85138	0.03379	-0.10398	0.0	0.0	0.0
22/ 22/ 34 (C)	-0.65119	0.00185	-0.06298	0.0	0.0	0.0
22/ 22/ 35 (C)	2.43811	0.01069	0.11943	0.0	0.0	0.0
22/ 22/ 36 (C)	2.28910	-0.00443	0.13503	0.0	0.0	0.0
22/ 22/ 37 (C)	-4.30827	0.03379	-0.20526	0.0	0.0	0.0
22/ 22/ 38 (C)	-3.10805	0.00185	-0.16427	0.0	0.0	0.0
22/ 22/ 39 (C)	1.19524	0.01069	0.06760	0.0	0.0	0.0
22/ 22/ 40 (C)	1.04622	-0.00443	0.08321	0.0	0.0	0.0
22/ 38/ 1	0.63772	0.00000	-0.01998	-0.00000	0.91125	0.00000
22/ 38/ 2	-138.88162	-0.00000	5.76162	0.00000	-124.62111	-0.00000
22/ 38/ 3	-138.88162	-0.00000	5.76162	0.00000	-124.62111	-0.00000
22/ 38/ 4	-138.88162	-0.00000	5.76162	0.00000	-124.62111	-0.00000
22/ 38/ 5	-11.13824	-0.57634	-0.86868	0.00000	-100.29171	-7.13967

Bar/Node/Case			FX (kip)	FY (kip)	FZ (kip)	MX (kip-in)	MY (kip-in)	MZ (kip-in)
22/	38/	6	12.48299	0.05807	0.58874	0.00000	16.69064	-4.68053
22/	38/	7	-72.96273	1.55101	-2.15035	-0.00000	529.10451	27.95356
22/	38/	8	-30.22215	-3.74446	-0.89070	-0.00000	219.16226	-67.48587
22/	38/	9 (C)	1.05436	0.00000	-0.03727	-0.00000	1.28511	0.00000
22/	38/	10 (C)	2.77763	0.00000	-0.11523	-0.00000	2.49242	0.00000
22/	38/	11 (C)	-2.52585	-0.01694	0.06568	0.00000	-4.62033	-0.20983
22/	38/	12 (C)	-1.83162	0.00171	0.10851	0.00000	-1.48221	-0.13756
22/	38/	13 (C)	-0.06347	-0.00786	-0.00187	-0.00000	0.46024	-0.14172
22/	38/	14 (C)	-0.15322	0.00326	-0.00452	-0.00000	1.11112	0.05870
22/	38/	15 (C)	1.05436	0.00000	-0.03727	-0.00000	1.28511	0.00000
22/	38/	16 (C)	3.83200	0.00000	-0.15250	-0.00000	3.77754	0.00000
22/	38/	17 (C)	-1.47143	-0.01694	0.02841	0.00000	-3.63521	-0.20983
22/	38/	18 (C)	-0.77726	0.00171	0.07124	0.00000	-0.19710	-0.13756
22/	38/	19 (C)	0.99090	-0.00786	-0.03914	-0.00000	1.74535	-0.14172
22/	38/	20 (C)	0.90114	0.00326	-0.04178	-0.00000	2.39623	0.05870
22/	38/	21 (C)	1.24320	-0.01270	-0.07443	-0.00000	-0.53581	-0.15738
22/	38/	22 (C)	1.76387	0.00128	-0.04231	-0.00000	2.04277	-0.10317
22/	38/	23 (C)	3.10427	-0.00413	-0.12467	-0.00000	3.39508	-0.07440
22/	38/	24 (C)	3.05715	0.00171	-0.12608	-0.00000	3.73777	0.03082
22/	38/	25 (C)	-1.89323	-0.01694	0.04332	0.00000	-4.14926	-0.20983
22/	38/	26 (C)	-1.19900	0.00171	0.08815	0.00000	-0.71115	-0.13756
22/	38/	27 (C)	0.58819	-0.00550	-0.02367	-0.00000	1.09324	-0.09920
22/	38/	28 (C)	0.52536	0.00228	-0.02552	-0.00000	1.54885	0.04109
22/	38/	29 (C)	1.47611	0.00000	-0.05217	-0.00000	1.79916	0.00000
22/	38/	30 (C)	2.65405	0.00000	-0.10233	-0.00000	2.78835	0.00000
22/	38/	31 (C)	3.68877	-0.01355	-0.17655	-0.00000	1.59375	-0.16787
22/	38/	32 (C)	4.24415	0.00137	-0.14228	-0.00000	4.34424	-0.11005
22/	38/	33 (C)	-1.38731	-0.02710	0.00275	0.00000	-5.08417	-0.33574
22/	38/	34 (C)	-0.27854	0.00273	0.07128	0.00000	0.41681	-0.22010
22/	38/	35 (C)	1.75730	-0.00788	-0.06964	-0.00000	2.50089	-0.14172
22/	38/	36 (C)	1.66754	0.00326	-0.07228	-0.00000	3.15174	0.05870
22/	38/	37 (C)	-3.09243	-0.02710	0.07154	0.00000	-6.71592	-0.33574
22/	38/	38 (C)	-1.98167	0.00273	0.14008	0.00000	-1.21494	-0.22010
22/	38/	39 (C)	0.88546	-0.00788	-0.03541	-0.00000	1.61684	-0.14172
22/	38/	40 (C)	0.79571	0.00326	-0.03805	-0.00000	2.26772	0.05870
23/	23/	1	0.83812	-0.00000	0.03812	0.0	0.0	0.0

Bar/Node/Case			FX (kip)	FY (kip)	FZ (kip)	MX (kip-in)	MY (kip-in)	MZ (kip-in)
23/	23/	2	-202.33479	0.00000	-8.24289	0.0	0.0	0.0
23/	23/	3	-202.33479	0.00000	-8.24289	0.0	0.0	0.0
23/	23/	4	-202.33479	0.00000	-8.24289	0.0	0.0	0.0
23/	23/	5	2.78205	0.28931	-1.33467	0.0	0.0	0.0
23/	23/	6	15.22738	-0.03512	-0.25642	0.0	0.0	0.0
23/	23/	7	-121.13611	2.10758	12.68512	0.0	0.0	0.0
23/	23/	8	50.17622	5.08814	-5.25435	0.0	0.0	0.0
23/	23/	9 (C)	1.44512	-0.00000	0.06285	0.0	0.0	0.0
23/	23/	10 (C)	4.04670	-0.00000	0.16486	0.0	0.0	0.0
23/	23/	11 (C)	-3.12120	0.00850	-0.16971	0.0	0.0	0.0
23/	23/	12 (C)	-2.75543	-0.00103	-0.13802	0.0	0.0	0.0
23/	23/	13 (C)	0.10537	0.01069	-0.01103	0.0	0.0	0.0
23/	23/	14 (C)	-0.25439	0.00443	0.02664	0.0	0.0	0.0
23/	23/	15 (C)	1.44512	-0.00000	0.06285	0.0	0.0	0.0
23/	23/	16 (C)	5.49182	-0.00000	0.22771	0.0	0.0	0.0
23/	23/	17 (C)	-1.57608	0.00850	-0.10986	0.0	0.0	0.0
23/	23/	18 (C)	-1.31031	-0.00103	-0.07517	0.0	0.0	0.0
23/	23/	19 (C)	1.55049	0.01069	0.05182	0.0	0.0	0.0
23/	23/	20 (C)	1.19073	0.00443	0.08949	0.0	0.0	0.0
23/	23/	21 (C)	2.13025	0.00638	0.05921	0.0	0.0	0.0
23/	23/	22 (C)	2.41357	-0.00077	0.08298	0.0	0.0	0.0
23/	23/	23 (C)	4.53546	0.00561	0.13070	0.0	0.0	0.0
23/	23/	24 (C)	4.34659	0.00232	0.20048	0.0	0.0	0.0
23/	23/	25 (C)	-2.25412	0.00850	-0.13200	0.0	0.0	0.0
23/	23/	26 (C)	-1.88836	-0.00103	-0.10031	0.0	0.0	0.0
23/	23/	27 (C)	0.94083	0.00748	0.02999	0.0	0.0	0.0
23/	23/	28 (C)	0.88900	0.00310	0.05636	0.0	0.0	0.0
23/	23/	29 (C)	2.02317	-0.00000	0.08799	0.0	0.0	0.0
23/	23/	30 (C)	3.75749	-0.00000	0.15785	0.0	0.0	0.0
23/	23/	31 (C)	5.71190	0.00680	0.20343	0.0	0.0	0.0
23/	23/	32 (C)	6.00452	-0.00083	0.22878	0.0	0.0	0.0
23/	23/	33 (C)	-1.23642	0.01360	-0.11369	0.0	0.0	0.0
23/	23/	34 (C)	-0.65119	-0.00165	-0.06298	0.0	0.0	0.0
23/	23/	35 (C)	2.54885	0.01069	0.09738	0.0	0.0	0.0
23/	23/	36 (C)	2.28910	0.00443	0.13503	0.0	0.0	0.0
23/	23/	37 (C)	-3.69330	0.01360	-0.21497	0.0	0.0	0.0

Bar/Node/Case			FX (kip)	FY (kip)	FZ (kip)	MX (kip-in)	MY (kip-in)	MZ (kip-in)
23/	23/	38 (C)	-3.10808	-0.00165	-0.16427	0.0	0.0	0.0
23/	23/	39 (C)	1.40598	0.01069	0.04553	0.0	0.0	0.0
23/	23/	40 (C)	1.04622	0.00443	0.08321	0.0	0.0	0.0
23/	39/	1	0.63772	0.00000	-0.01998	-0.00000	0.91125	0.00000
23/	39/	2	-138.88162	-0.00000	5.76162	-0.00000	-124.62111	-0.00000
23/	39/	3	-138.88162	-0.00000	5.76162	-0.00000	-124.62111	-0.00000
23/	39/	4	-138.88162	-0.00000	5.76162	-0.00000	-124.62111	-0.00000
23/	39/	5	-0.09113	-0.06174	-0.44984	-0.00000	-89.52626	-11.42946
23/	39/	6	12.48299	-0.05807	0.58874	-0.00000	16.69064	4.68053
23/	39/	7	-72.96273	-1.55101	-2.15035	0.00000	529.10451	-27.95356
23/	39/	8	30.22215	-3.74446	0.89070	0.00000	-219.16226	-67.48587
23/	39/	9 (C)	1.05436	0.00000	-0.03727	0.00000	1.28511	0.00000
23/	39/	10 (C)	2.77763	0.00000	-0.11523	0.00000	2.49242	0.00000
23/	39/	11 (C)	-2.20117	-0.00181	0.07794	-0.00000	-4.60687	-0.33591
23/	39/	12 (C)	-1.83162	-0.00171	0.10851	-0.00000	-1.48221	0.13756
23/	39/	13 (C)	0.06347	-0.00786	0.00187	0.00000	-0.46024	-0.14172
23/	39/	14 (C)	-0.15322	-0.00326	-0.00452	0.00000	1.11112	-0.05870
23/	39/	15 (C)	1.05436	0.00000	-0.03727	0.00000	1.28511	0.00000
23/	39/	16 (C)	3.83200	0.00000	-0.15250	0.00000	3.77754	0.00000
23/	39/	17 (C)	-1.14681	-0.00181	0.04072	-0.00000	-3.32175	-0.33591
23/	39/	18 (C)	-0.77726	-0.00171	0.07124	-0.00000	-0.19710	0.13756
23/	39/	19 (C)	1.11783	-0.00786	-0.03539	0.00000	0.82487	-0.14172
23/	39/	20 (C)	0.90114	-0.00326	-0.04178	0.00000	2.39623	-0.05870
23/	39/	21 (C)	1.48671	-0.00138	-0.06520	-0.00000	-0.30072	-0.25193
23/	39/	22 (C)	1.76397	-0.00128	-0.04231	-0.00000	2.04277	0.10317
23/	39/	23 (C)	3.17091	-0.00413	-0.12271	0.00000	2.91260	-0.07440
23/	39/	24 (C)	3.05715	-0.00171	-0.12608	0.00000	3.73777	-0.03082
23/	39/	25 (C)	-1.56856	-0.00181	0.05563	-0.00000	-3.83580	-0.33591
23/	39/	26 (C)	-1.19900	-0.00171	0.08615	-0.00000	-0.71115	0.13756
23/	39/	27 (C)	0.67704	-0.00550	-0.02105	0.00000	0.44890	-0.09920
23/	39/	28 (C)	0.52536	-0.00228	-0.02552	0.00000	1.54885	-0.04109
23/	39/	29 (C)	1.47611	0.00000	-0.05217	0.00000	1.79916	0.00000
23/	39/	30 (C)	2.65405	0.00000	-0.10233	0.00000	2.78835	0.00000
23/	39/	31 (C)	3.94851	-0.00145	-0.16670	-0.00000	1.84452	-0.26873
23/	39/	32 (C)	4.24415	-0.00137	-0.14228	-0.00000	4.34424	0.11005
23/	39/	33 (C)	-0.86783	-0.00290	0.02264	-0.00000	-4.58264	-0.53746

Bar/Node/Case			FX (kip)	FY (kip)	FZ (kip)	MX (kip-in)	MY (kip-in)	MZ (kip-in)
23/	39/	34 (C)	-0.27854	-0.00273	0.07128	-0.00000	0.41681	0.22010
23/	39/	35 (C)	1.88423	-0.00766	-0.06589	0.00000	1.58038	0.14172
23/	39/	36 (C)	1.66754	-0.00326	-0.07228	0.00000	3.15174	-0.05870
23/	39/	37 (C)	-2.57295	-0.00290	0.09124	-0.00000	-6.21439	-0.53746
23/	39/	38 (C)	-1.98167	-0.00273	0.14008	-0.00000	-1.21494	0.22010
23/	39/	39 (C)	1.01239	-0.00786	-0.03167	0.00000	0.69636	-0.14172
23/	39/	40 (C)	0.79571	-0.00326	-0.03805	0.00000	2.26772	-0.05870
24/	24/	1	0.83812	0.00000	0.03812	0.0	0.0	0.0
24/	24/	2	-202.33479	0.00000	-8.24289	0.0	0.0	0.0
24/	24/	3	-202.33479	0.00000	-8.24289	0.0	0.0	0.0
24/	24/	4	-202.33479	0.00000	-8.24289	0.0	0.0	0.0
24/	24/	5	15.19427	0.03559	-0.25965	0.0	0.0	0.0
24/	24/	6	2.79577	-0.28817	-1.33325	0.0	0.0	0.0
24/	24/	7	50.17622	5.08814	5.25435	0.0	0.0	0.0
24/	24/	8	121.13611	2.10758	-12.68512	0.0	0.0	0.0
24/	24/	9 (C)	1.44512	-0.00000	0.06285	0.0	0.0	0.0
24/	24/	10 (C)	4.04670	-0.00000	0.16486	0.0	0.0	0.0
24/	24/	11 (C)	-2.75640	0.00105	-0.13812	0.0	0.0	0.0
24/	24/	12 (C)	-3.12079	-0.00847	-0.16967	0.0	0.0	0.0
24/	24/	13 (C)	0.25439	0.00443	-0.02664	0.0	0.0	0.0
24/	24/	14 (C)	-0.10537	0.01069	0.01103	0.0	0.0	0.0
24/	24/	15 (C)	1.44512	-0.00000	0.06285	0.0	0.0	0.0
24/	24/	16 (C)	5.49182	-0.00000	0.22771	0.0	0.0	0.0
24/	24/	17 (C)	-1.31128	0.00105	-0.07527	0.0	0.0	0.0
24/	24/	18 (C)	-1.67567	-0.00847	-0.10682	0.0	0.0	0.0
24/	24/	19 (C)	1.69951	0.00443	0.00821	0.0	0.0	0.0
24/	24/	20 (C)	1.33975	0.01069	0.07389	0.0	0.0	0.0
24/	24/	21 (C)	2.41284	0.00078	0.08290	0.0	0.0	0.0
24/	24/	22 (C)	2.13955	-0.00835	0.05974	0.0	0.0	0.0
24/	24/	23 (C)	4.61369	0.00232	0.17251	0.0	0.0	0.0
24/	24/	24 (C)	4.42482	0.00561	0.19229	0.0	0.0	0.0
24/	24/	25 (C)	-1.88933	0.00105	-0.10041	0.0	0.0	0.0
24/	24/	26 (C)	-2.25372	-0.00847	-0.13198	0.0	0.0	0.0
24/	24/	27 (C)	1.04514	0.00310	0.01908	0.0	0.0	0.0
24/	24/	28 (C)	0.79331	0.00748	0.04544	0.0	0.0	0.0
24/	24/	29 (C)	2.02317	-0.00000	0.08799	0.0	0.0	0.0

Bar/Node/Case	FX (kip)	FY (kip)	FZ (kip)	MX (kip-in)	MY (kip-in)	MZ (kip-in)
24/ 24/ 30 (C)	3.75749	-0.00000	0.15785	0.0	0.0	0.0
24/ 24/ 31 (C)	6.00374	0.00084	0.22870	0.0	0.0	0.0
24/ 24/ 32 (C)	5.71222	-0.00078	0.20348	0.0	0.0	0.0
24/ 24/ 33 (C)	-0.65275	0.00167	-0.06314	0.0	0.0	0.0
24/ 24/ 34 (C)	-1.23578	-0.01355	-0.11362	0.0	0.0	0.0
24/ 24/ 35 (C)	2.79787	0.00443	0.08178	0.0	0.0	0.0
24/ 24/ 36 (C)	2.43811	0.01089	0.11943	0.0	0.0	0.0
24/ 24/ 37 (C)	-3.10963	0.00187	-0.16443	0.0	0.0	0.0
24/ 24/ 38 (C)	-3.66266	-0.01355	-0.21490	0.0	0.0	0.0
24/ 24/ 39 (C)	1.55499	0.00443	0.02993	0.0	0.0	0.0
24/ 24/ 40 (C)	1.16524	0.01089	0.06760	0.0	0.0	0.0
24/ 40/ 1	0.63772	0.00000	-0.01998	-0.00000	0.91125	0.00000
24/ 40/ 2	-138.88162	-0.00000	5.76162	0.00000	-124.62111	-0.00000
24/ 40/ 3	-138.88162	-0.00000	5.76162	0.00000	-124.62111	-0.00000
24/ 40/ 4	-138.88162	-0.00000	5.76162	0.00000	-124.62111	-0.00000
24/ 40/ 5	12.45119	0.05798	0.5849	0.00000	16.32637	-4.69917
24/ 40/ 6	-0.07798	0.06150	-0.44826	0.00000	-89.47537	11.39442
24/ 40/ 7	-30.22215	-3.74446	-0.89070	0.00000	219.16226	-67.48587
24/ 40/ 8	72.96273	-1.55101	2.16035	0.00000	-529.10451	-27.95356
24/ 40/ 9 (C)	1.05430	0.00000	-0.03727	-0.00000	1.28511	0.00000
24/ 40/ 10 (C)	2.77753	0.00000	-0.11523	-0.00000	2.49242	0.00000
24/ 40/ 11 (C)	-1.83256	0.00170	0.10840	0.00000	-1.49292	-0.13811
24/ 40/ 12 (C)	-2.20079	0.00181	0.07803	0.00000	-4.60243	0.33456
24/ 40/ 13 (C)	0.15322	-0.00326	0.00452	0.00000	-1.11112	-0.05876
24/ 40/ 14 (C)	-0.06347	-0.00786	-0.00185	-0.00000	0.45024	-0.14172
24/ 40/ 15 (C)	1.05436	0.00000	-0.03727	-0.00000	1.28511	0.00000
24/ 40/ 16 (C)	3.83200	0.00000	-0.15250	-0.00000	3.77754	0.00000
24/ 40/ 17 (C)	-0.77819	0.00170	0.07113	0.00000	-0.20731	-0.13811
24/ 40/ 18 (C)	-1.14642	0.00181	0.04077	0.00000	-3.31732	0.33456
24/ 40/ 19 (C)	1.20759	-0.00326	-0.03275	-0.00000	0.17399	-0.05870
24/ 40/ 20 (C)	0.99090	-0.00786	-0.03914	-0.00000	1.74535	-0.14172
24/ 40/ 21 (C)	1.76317	0.00125	-0.04239	-0.00000	2.03474	-0.10356
24/ 40/ 22 (C)	1.48700	0.00136	-0.06517	-0.00000	-0.29739	0.25094
24/ 40/ 23 (C)	3.21803	-0.00171	-0.12132	-0.00000	2.57109	-0.03082
24/ 40/ 24 (C)	3.10427	-0.00413	-0.12467	-0.00000	3.39606	-0.07440
24/ 40/ 25 (C)	-1.19994	0.00170	0.08604	0.00000	-0.72189	-0.13811

Bar/Node/Case	FX (kip)	FY (kip)	FZ (kip)	MX (kip-in)	MY (kip-in)	MZ (kip-in)
24/ 40/ 26 (C)	1.56517	0.00181	0.05567	0.00000	3.83137	0.33459
24/ 40/ 27 (C)	0.73987	-0.00228	-0.01929	-0.00000	-0.00672	-0.04109
24/ 40/ 28 (C)	0.58819	-0.00556	-0.02367	-0.00000	1.09324	-0.09920
24/ 40/ 29 (C)	1.47611	0.00000	-0.05217	-0.00000	1.79916	0.00000
24/ 40/ 30 (C)	2.65405	0.00000	-0.10233	-0.00000	2.78835	0.00000
24/ 40/ 31 (C)	4.24349	0.00136	-0.14237	-0.00000	4.33568	-0.11049
24/ 40/ 32 (C)	3.94862	0.00145	-0.16666	-0.00000	1.84807	0.26767
24/ 40/ 33 (C)	-0.27804	0.00273	0.07110	0.00000	0.39968	-0.22067
24/ 40/ 34 (C)	-0.86721	0.00289	0.02252	0.00000	-4.57555	0.53534
24/ 40/ 35 (C)	1.97398	-0.00326	-0.06325	-0.00000	0.92950	-0.05870
24/ 40/ 36 (C)	1.75730	-0.00786	-0.08984	-0.00000	2.50066	-0.14172
24/ 40/ 37 (C)	1.98316	0.00273	0.13990	0.00000	-1.22207	-0.22067
24/ 40/ 38 (C)	-2.57233	0.00289	0.09131	0.00000	-5.20729	0.53534
24/ 40/ 39 (C)	1.10215	-0.00326	-0.02902	-0.00000	0.04548	-0.05870
24/ 40/ 40 (C)	0.88546	-0.00786	-0.03541	-0.00000	1.61584	-0.14172
25/ 33/ 1	0.66517	0.00510	0.01531	0.0	0.0	0.0
25/ 33/ 2	-156.14068	-1.28845	-3.86535	0.0	0.0	0.0
25/ 33/ 3	-156.14068	-1.28845	-3.86535	0.0	0.0	0.0
25/ 33/ 4	-156.14068	-1.28845	-3.86535	0.0	0.0	0.0
25/ 33/ 5	7.28151	0.0	0.0	0.0	0.0	0.0
25/ 33/ 6	-3.89581	0.0	0.0	0.0	0.0	0.0
25/ 33/ 7	57.25028	2.73321	-0.91107	0.0	0.0	0.0
25/ 33/ 8	63.01240	2.73321	-0.91107	0.0	0.0	0.0
25/ 33/ 9 (C)	1.16359	0.00897	0.02690	0.0	0.0	0.0
25/ 33/ 10 (C)	3.12281	0.02577	0.07731	0.0	0.0	0.0
25/ 33/ 11 (C)	-2.25829	-0.02040	-0.06119	0.0	0.0	0.0
25/ 33/ 12 (C)	-2.58620	-0.02040	-0.06119	0.0	0.0	0.0
25/ 33/ 13 (C)	0.13233	0.00574	-0.00191	0.0	0.0	0.0
25/ 33/ 14 (C)	0.12023	0.00574	-0.00191	0.0	0.0	0.0
25/ 33/ 15 (C)	1.16359	0.00897	0.02690	0.0	0.0	0.0
25/ 33/ 16 (C)	4.28640	0.03474	0.10421	0.0	0.0	0.0
25/ 33/ 17 (C)	-1.09470	-0.01143	-0.03429	0.0	0.0	0.0
25/ 33/ 18 (C)	-1.42262	-0.01143	-0.03429	0.0	0.0	0.0
25/ 33/ 19 (C)	1.29591	0.01471	0.02499	0.0	0.0	0.0
25/ 33/ 20 (C)	1.28381	0.01471	0.02499	0.0	0.0	0.0
25/ 33/ 21 (C)	1.81198	0.01300	0.03899	0.0	0.0	0.0

Bar/Node/Case	FX (kip)	FY (kip)	FZ (kip)	MX (kip-in)	MY (kip-in)	MZ (kip-in)
25/ 33/ 22 (C)	1.56605	0.01300	0.03899	0.0	0.0	0.0
25/ 33/ 23 (C)	3.57517	0.03131	0.08388	0.0	0.0	0.0
25/ 33/ 24 (C)	3.56882	0.03131	0.08388	0.0	0.0	0.0
25/ 33/ 25 (C)	-1.56014	-0.01502	-0.04505	0.0	0.0	0.0
25/ 33/ 26 (C)	-1.88805	-0.01502	-0.04505	0.0	0.0	0.0
25/ 33/ 27 (C)	0.79078	0.00940	0.01480	0.0	0.0	0.0
25/ 33/ 28 (C)	0.78231	0.00940	0.01480	0.0	0.0	0.0
25/ 33/ 29 (C)	1.62902	0.01255	0.03766	0.0	0.0	0.0
25/ 33/ 30 (C)	2.95771	0.02365	0.07094	0.0	0.0	0.0
25/ 33/ 31 (C)	4.58617	0.03567	0.10702	0.0	0.0	0.0
25/ 33/ 32 (C)	4.32384	0.03567	0.10702	0.0	0.0	0.0
25/ 33/ 33 (C)	-0.65555	-0.00899	-0.02697	0.0	0.0	0.0
25/ 33/ 34 (C)	-1.18021	-0.00899	-0.02697	0.0	0.0	0.0
25/ 33/ 35 (C)	2.15319	0.02165	0.04583	0.0	0.0	0.0
25/ 33/ 36 (C)	2.14109	0.02165	0.04583	0.0	0.0	0.0
25/ 33/ 37 (C)	-2.56604	-0.02456	-0.07369	0.0	0.0	0.0
25/ 33/ 38 (C)	-3.09070	0.02456	-0.07360	0.0	0.0	0.0
25/ 33/ 39 (C)	1.17959	0.01381	0.02230	0.0	0.0	0.0
25/ 33/ 40 (C)	1.16746	0.01381	0.02230	0.0	0.0	0.0
25/ 34/ 1	0.89517	-0.005[illegible]0	-0.01531	0.0	0.0	0.0
25/ 34/ 2	-156.14068	1.28845	3.86535	0.0	0.0	0.0
25/ 34/ 3	-156.14068	1.28845	3.86535	0.0	0.0	0.0
25/ 34/ 4	-156.14068	1.28845	3.86535	0.0	0.0	0.0
25/ 34/ 5	7.28151	0.0	0.0	0.0	0.0	0.0
25/ 34/ 6	-3.89581	0.0	0.0	0.0	0.0	0.0
25/ 34/ 7	63.01240	-2.73321	0.91107	0.0	0.0	0.0
25/ 34/ 8	57.25028	-2.73321	0.91107	0.0	0.0	0.0
25/ 34/ 9 (C)	1.16359	-0.00897	-0.02690	0.0	0.0	0.0
25/ 34/ 10 (C)	3.12281	-0.02577	-0.07731	0.0	0.0	0.0
25/ 34/ 11 (C)	-2.25829	0.02040	0.06119	0.0	0.0	0.0
25/ 34/ 12 (C)	-2.58620	0.02040	0.06119	0.0	0.0	0.0
25/ 34/ 13 (C)	0.12023	-0.00574	0.00191	0.0	0.0	0.0
25/ 34/ 14 (C)	0.13233	-0.00574	0.00191	0.0	0.0	0.0
25/ 34/ 15 (C)	1.16359	-0.00897	0.02690	0.0	0.0	0.0
25/ 34/ 16 (C)	4.28640	-0.03474	-0.10421	0.0	0.0	0.0
25/ 34/ 17 (C)	-1.09470	0.01143	0.03429	0.0	0.0	0.0

Bar/Node/Case	FX (kip)	FY (kip)	FZ (kip)	MX (kip-in)	MY (kip-in)	MZ (kip-in)
25/ 34/ 18 (C)	-1.42262	0.01143	0.03429	0.0	0.0	0.0
25/ 34/ 19 (C)	1.28381	-0.01471	-0.02499	0.0	0.0	0.0
25/ 34/ 20 (C)	1.29591	-0.01471	-0.02499	0.0	0.0	0.0
25/ 34/ 21 (C)	1.81198	-0.01300	-0.03899	0.0	0.0	0.0
25/ 34/ 22 (C)	1.56605	-0.01300	-0.03899	0.0	0.0	0.0
25/ 34/ 23 (C)	3.56882	-0.03131	-0.08388	0.0	0.0	0.0
25/ 34/ 24 (C)	3.57517	-0.03131	-0.08388	0.0	0.0	0.0
25/ 34/ 25 (C)	-1.56014	0.01502	0.04505	0.0	0.0	0.0
25/ 34/ 26 (C)	-1.88805	0.01502	0.04505	0.0	0.0	0.0
25/ 34/ 27 (C)	0.78231	-0.00940	-0.01480	0.0	0.0	0.0
25/ 34/ 28 (C)	0.79078	-0.00940	-0.01480	0.0	0.0	0.0
25/ 34/ 29 (C)	1.62902	-0.01255	-0.03766	0.0	0.0	0.0
25/ 34/ 30 (C)	2.95771	-0.02365	-0.07094	0.0	0.0	0.0
25/ 34/ 31 (C)	4.58617	-0.03567	-0.10702	0.0	0.0	0.0
25/ 34/ 32 (C)	4.32384	-0.03567	-0.10702	0.0	0.0	0.0
25/ 34/ 33 (C)	0.65555	0.00899	0.02697	0.0	0.0	0.0
25/ 34/ 34 (C)	-1.18021	0.00899	0.02697	0.0	0.0	0.0
25/ 34/ 35 (C)	2.14109	-0.02165	-0.04583	0.0	0.0	0.0
25/ 34/ 36 (C)	2.15319	-0.02165	-0.04583	0.0	0.0	0.0
25/ 34/ 37 (C)	-2.56604	0.02456	0.07369	0.0	0.0	0.0
25/ 34/ 38 (C)	-3.09070	0.02456	0.07369	0.0	0.0	0.0
25/ 34/ 39 (C)	1.16746	0.01381	-0.02230	0.0	0.0	0.0
25/ 34/ 40 (C)	1.17959	-0.01381	-0.02230	0.0	0.0	0.0
26/ 34/ 1	0.66517	0.00510	0.01531	0.0	0.0	0.0
26/ 34/ 2	-156.14068	-1.28845	-3.86535	0.0	0.0	0.0
26/ 34/ 3	-156.14068	-1.28845	-3.86535	0.0	0.0	0.0
26/ 34/ 4	-156.14068	-1.28845	-3.86535	0.0	0.0	0.0
26/ 34/ 5	3.43700	0.0	0.0	0.0	0.0	0.0
26/ 34/ 6	-8.72422	0.0	0.0	0.0	0.0	0.0
26/ 34/ 7	85.03855	3.86535	-1.28845	0.0	0.0	0.0
26/ 34/ 8	4.07443	0.0	0.0	0.0	0.0	0.0
26/ 34/ 9 (C)	1.16359	0.00897	0.02690	0.0	0.0	0.0
26/ 34/ 10 (C)	3.12281	0.02577	0.07731	0.0	0.0	0.0
26/ 34/ 11 (C)	-2.37069	-0.02040	-0.06119	0.0	0.0	0.0
26/ 34/ 12 (C)	-2.72811	-0.02040	-0.06119	0.0	0.0	0.0
26/ 34/ 13 (C)	0.00856	0.0	0.0	0.0	0.0	0.0

Bar/Node/Case	FX (kip)	FY (kip)	FZ (kip)	MX (kip-in)	MY (kip-in)	MZ (kip-in)
26/ 34/ 14 (C)	0.17858	0.00812	-0.00271	0.0	0.0	0.0
26/ 34/ 15 (C)	1.16359	0.00897	0.02690	0.0	0.0	0.0
26/ 34/ 16 (C)	4.28640	0.03474	0.10421	0.0	0.0	0.0
26/ 34/ 17 (C)	-1.20711	-0.01143	-0.03429	0.0	0.0	0.0
26/ 34/ 18 (C)	-1.56452	-0.01143	-0.03429	0.0	0.0	0.0
26/ 34/ 19 (C)	1.17214	0.00897	0.02690	0.0	0.0	0.0
26/ 34/ 20 (C)	1.34217	0.01708	0.02420	0.0	0.0	0.0
26/ 34/ 21 (C)	1.72768	0.01300	0.03899	0.0	0.0	0.0
26/ 34/ 22 (C)	1.45961	0.01300	0.03899	0.0	0.0	0.0
26/ 34/ 23 (C)	3.51019	0.02829	0.08488	0.0	0.0	0.0
26/ 34/ 24 (C)	3.59945	0.03259	0.08346	0.0	0.0	0.0
26/ 34/ 25 (C)	1.67254	-0.01502	-0.04505	0.0	0.0	0.0
26/ 34/ 26 (C)	-2.02996	-0.01502	-0.04505	0.0	0.0	0.0
26/ 34/ 27 (C)	0.70414	0.00539	0.01614	0.0	0.0	0.0
26/ 34/ 28 (C)	0.82318	0.01106	0.01425	0.0	0.0	0.0
26/ 34/ 29 (C)	1.62902	0.01255	0.03766	0.0	0.0	0.0
26/ 34/ 30 (C)	2.95771	0.02365	0.07094	0.0	0.0	0.0
26/ 34/ 31 (C)	4.49625	0.03567	0.10702	0.0	0.0	0.0
26/ 34/ 32 (C)	4.21032	0.03567	0.10702	0.0	0.0	0.0
26/ 34/ 33 (C)	-0.83540	-0.00899	-0.02697	0.0	0.0	0.0
26/ 34/ 34 (C)	-1.40727	-0.00899	-0.02697	0.0	0.0	0.0
26/ 34/ 35 (C)	2.02943	0.01591	0.04774	0.0	0.0	0.0
26/ 34/ 36 (C)	2.19945	0.02403	0.04504	0.0	0.0	0.0
26/ 34/ 37 (C)	-2.74588	-0.02459	-0.07369	0.0	0.0	0.0
26/ 34/ 38 (C)	-3.31775	-0.02459	-0.07369	0.0	0.0	0.0
26/ 34/ 39 (C)	1.05579	0.00807	0.02421	0.0	0.0	0.0
26/ 34/ 40 (C)	1.22581	0.01619	0.02151	0.0	0.0	0.0
26/ 35/ 1	0.69517	-0.00513	-0.01531	0.0	0.0	0.0
26/ 35/ 2	-156.14068	1.28845	3.86535	0.0	0.0	0.0
26/ 35/ 3	-156.14068	1.28845	3.86535	0.0	0.0	0.0
26/ 35/ 4	-156.14068	1.28845	3.86535	0.0	0.0	0.0
26/ 35/ 5	3.43700	0.0	0.0	0.0	0.0	0.0
26/ 35/ 6	-8.72422	0.0	0.0	0.0	0.0	0.0
26/ 35/ 7	85.03855	-3.86535	1.28845	0.0	0.0	0.0
26/ 35/ 8	-4.07443	0.0	0.0	0.0	0.0	0.0
26/ 35/ 9 (C)	1.16359	-0.00897	-0.02690	0.0	0.0	0.0

Bar/Node/Case	FX (kip)	FY (kip)	FZ (kip)	MX (kip-in)	MY (kip-in)	MZ (kip-in)
26/ 35/ 10 (C)	3.12281	-0.02577	-0.07731	0.0	0.0	0.0
26/ 35/ 11 (C)	-2.37069	0.02040	0.06119	0.0	0.0	0.0
26/ 35/ 12 (C)	-2.72811	0.02040	0.06119	0.0	0.0	0.0
26/ 35/ 13 (C)	-0.00856	0.0	0.0	0.0	0.0	0.0
26/ 35/ 14 (C)	0.17858	-0.00812	0.00271	0.0	0.0	0.0
26/ 35/ 15 (C)	1.16359	-0.00897	-0.02690	0.0	0.0	0.0
26/ 35/ 16 (C)	4.28640	-0.03474	-0.10421	0.0	0.0	0.0
26/ 35/ 17 (C)	-1.20711	0.01143	0.03429	0.0	0.0	0.0
26/ 35/ 18 (C)	-1.56452	0.01143	0.03429	0.0	0.0	0.0
26/ 35/ 19 (C)	1.15503	-0.00897	-0.02690	0.0	0.0	0.0
26/ 35/ 20 (C)	1.34217	-0.01708	-0.02420	0.0	0.0	0.0
26/ 35/ 21 (C)	1.72768	-0.01300	-0.03899	0.0	0.0	0.0
26/ 35/ 22 (C)	1.45961	-0.01300	-0.03899	0.0	0.0	0.0
26/ 35/ 23 (C)	3.50121	-0.02829	-0.08488	0.0	0.0	0.0
26/ 35/ 24 (C)	3.59945	-0.03259	-0.08346	0.0	0.0	0.0
26/ 35/ 25 (C)	-1.67254	0.01502	0.04505	0.0	0.0	0.0
26/ 35/ 26 (C)	-2.02996	0.01502	0.04505	0.0	0.0	0.0
26/ 35/ 27 (C)	0.69216	-0.00538	-0.01614	0.0	0.0	0.0
26/ 35/ 28 (C)	0.82316	-0.01106	-0.01425	0.0	0.0	0.0
26/ 35/ 29 (C)	1.62902	-0.01255	-0.03766	0.0	0.0	0.0
26/ 35/ 30 (C)	2.95771	-0.02365	-0.07094	0.0	0.0	0.0
26/ 35/ 31 (C)	4.49625	-0.03567	-0.10702	0.0	0.0	0.0
26/ 35/ 32 (C)	4.21032	-0.03567	-0.10702	0.0	0.0	0.0
26/ 35/ 33 (C)	-0.83540	0.00899	0.02697	0.0	0.0	0.0
26/ 35/ 34 (C)	-1.40727	0.00899	0.02697	0.0	0.0	0.0
26/ 35/ 35 (C)	2.01231	-0.01591	-0.04774	0.0	0.0	0.0
26/ 35/ 36 (C)	2.19945	-0.02403	-0.04504	0.0	0.0	0.0
26/ 35/ 37 (C)	-2.74588	0.02456	0.07369	0.0	0.0	0.0
26/ 35/ 38 (C)	-3.31775	0.02456	0.07369	0.0	0.0	0.0
26/ 35/ 39 (C)	1.03867	-0.00807	-0.02421	0.0	0.0	0.0
26/ 35/ 40 (C)	1.22581	-0.01619	-0.02151	0.0	0.0	0.0
27/ 35/ 1	0.69517	0.00510	0.01531	0.0	0.0	0.0
27/ 35/ 2	-156.14068	-1.28845	-3.86535	0.0	0.0	0.0
27/ 35/ 3	-156.14068	-1.28845	-3.86535	0.0	0.0	0.0
27/ 35/ 4	-156.14068	-1.28845	-3.86535	0.0	0.0	0.0
27/ 35/ 5	-3.88792	0.0	0.0	0.0	0.0	0.0

Bar/Node/Case	FX (kip)	FY (kip)	FZ (kip)	MX (kip-in)	MY (kip-in)	MZ (kip-in)
27/ 35/ 6	-3.89581	0.0	0.0	0.0	0.0	0.0
27/ 35/ 7	63.01240	2.73321	-0.91107	0.0	0.0	0.0
27/ 35/ 8	-57.25028	-2.73321	0.91107	0.0	0.0	0.0
27/ 35/ 9 (C)	1.16359	0.00897	0.02690	0.0	0.0	0.0
27/ 35/ 10 (C)	3.12281	0.02577	0.07731	0.0	0.0	0.0
27/ 35/ 11 (C)	-2.58597	-0.02040	-0.06119	0.0	0.0	0.0
27/ 35/ 12 (C)	-2.58620	-0.02040	-0.06119	0.0	0.0	0.0
27/ 35/ 13 (C)	-0.12023	-0.00574	0.00191	0.0	0.0	0.0
27/ 35/ 14 (C)	0.13233	0.00574	-0.00191	0.0	0.0	0.0
27/ 35/ 15 (C)	1.15359	0.00897	0.02690	0.0	0.0	0.0
27/ 35/ 16 (C)	4.28640	0.03474	0.10421	0.0	0.0	0.0
27/ 35/ 17 (C)	-1.42238	-0.01143	-0.03429	0.0	0.0	0.0
27/ 35/ 18 (C)	-1.42262	-0.01143	-0.03429	0.0	0.0	0.0
27/ 35/ 19 (C)	1.04336	0.00323	0.02882	0.0	0.0	0.0
27/ 35/ 20 (C)	1.29501	0.01471	0.02499	0.0	0.0	0.0
27/ 35/ 21 (C)	1.56622	0.01300	0.03899	0.0	0.0	0.0
27/ 35/ 22 (C)	1.56605	0.01300	0.03899	0.0	0.0	0.0
27/ 35/ 23 (C)	3.44258	0.02528	0.08589	0.0	0.0	0.0
27/ 35/ 24 (C)	3.57517	0.03131	0.08388	0.0	0.0	0.0
27/ 35/ 25 (C)	-1.88782	-0.01502	-0.04505	0.0	0.0	0.0
27/ 35/ 26 (C)	-1.88805	-0.01502	-0.04505	0.0	0.0	0.0
27/ 35/ 27 (C)	0.61400	0.00136	0.01748	0.0	0.0	0.0
27/ 35/ 28 (C)	0.79078	0.00940	0.01480	0.0	0.0	0.0
27/ 35/ 29 (C)	1.62902	0.01255	0.03766	0.0	0.0	0.0
27/ 35/ 30 (C)	2.95771	0.02365	0.07094	0.0	0.0	0.0
27/ 35/ 31 (C)	4.32403	0.03567	0.10702	0.0	0.0	0.0
27/ 35/ 32 (C)	4.32384	0.03567	0.10702	0.0	0.0	0.0
27/ 35/ 33 (C)	-1.17984	-0.00899	-0.02697	0.0	0.0	0.0
27/ 35/ 34 (C)	-1.18021	-0.00899	-0.02697	0.0	0.0	0.0
27/ 35/ 35 (C)	1.90064	0.01017	0.04966	0.0	0.0	0.0
27/ 35/ 36 (C)	2.15319	0.02165	0.04583	0.0	0.0	0.0
27/ 35/ 37 (C)	-3.09033	-0.02456	-0.07369	0.0	0.0	0.0
27/ 35/ 38 (C)	-3.09070	-0.02456	-0.07369	0.0	0.0	0.0
27/ 35/ 39 (C)	0.92700	0.00233	0.02613	0.0	0.0	0.0
27/ 35/ 40 (C)	1.17956	0.01381	0.02230	0.0	0.0	0.0
27/ 36/ 1	0.69517	-0.00510	-0.01531	0.0	0.0	0.0

Bar/Node/Case	FX (kip)	FY (kip)	FZ (kip)	MX (kip-in)	MY (kip-in)	MZ (kip-in)
27/ 36/ 2	-156.14068	1.28845	3.86535	0.0	0.0	0.0
27/ 36/ 3	-156.14068	1.28845	3.86535	0.0	0.0	0.0
27/ 36/ 4	-156.14068	1.28845	3.86535	0.0	0.0	0.0
27/ 36/ 5	-3.88792	0.0	0.0	0.0	0.0	0.0
27/ 36/ 6	3.89581	0.0	0.0	0.0	0.0	0.0
27/ 36/ 7	57.25028	-2.73321	0.91107	0.0	0.0	0.0
27/ 36/ 8	-63.01240	2.73321	-0.91107	0.0	0.0	0.0
27/ 36/ 9 (C)	1.16359	-0.00897	-0.02690	0.0	0.0	0.0
27/ 36/ 10 (C)	3.12281	-0.02577	-0.07731	0.0	0.0	0.0
27/ 36/ 11 (C)	-2.58597	0.02040	0.06119	0.0	0.0	0.0
27/ 36/ 12 (C)	-2.58620	0.02040	0.06119	0.0	0.0	0.0
27/ 36/ 13 (C)	-0.13233	0.00574	-0.00191	0.0	0.0	0.0
27/ 36/ 14 (C)	0.12023	-0.00574	0.00191	0.0	0.0	0.0
27/ 36/ 15 (C)	1.15359	-0.00897	-0.02690	0.0	0.0	0.0
27/ 36/ 16 (C)	4.28640	-0.03474	-0.10421	0.0	0.0	0.0
27/ 36/ 17 (C)	-1.42238	0.01143	0.03429	0.0	0.0	0.0
27/ 36/ 18 (C)	-1.42262	0.01143	0.03429	0.0	0.0	0.0
27/ 36/ 19 (C)	1.03126	-0.00323	-0.02882	0.0	0.0	0.0
27/ 36/ 20 (C)	1.28381	-0.01471	-0.02499	0.0	0.0	0.0
27/ 36/ 21 (C)	1.56622	-0.01300	-0.03899	0.0	0.0	0.0
27/ 36/ 22 (C)	1.56605	-0.01300	-0.03899	0.0	0.0	0.0
27/ 36/ 23 (C)	3.43623	-0.02528	-0.08589	0.0	0.0	0.0
27/ 36/ 24 (C)	3.56382	-0.03131	-0.08388	0.0	0.0	0.0
27/ 36/ 25 (C)	-1.88782	0.01502	0.04505	0.0	0.0	0.0
27/ 36/ 26 (C)	-1.88805	0.01502	0.04505	0.0	0.0	0.0
27/ 36/ 27 (C)	0.60552	-0.00136	-0.01748	0.0	0.0	0.0
27/ 36/ 28 (C)	0.79231	-0.00940	-0.01480	0.0	0.0	0.0
27/ 36/ 29 (C)	1.62902	-0.01255	-0.03766	0.0	0.0	0.0
27/ 36/ 30 (C)	2.95771	-0.02365	-0.07094	0.0	0.0	0.0
27/ 36/ 31 (C)	4.32403	-0.03567	-0.10702	0.0	0.0	0.0
27/ 36/ 32 (C)	4.32384	-0.03567	-0.10702	0.0	0.0	0.0
27/ 36/ 33 (C)	-1.17984	0.00899	0.02697	0.0	0.0	0.0
27/ 36/ 34 (C)	-1.18021	0.00899	0.02697	0.0	0.0	0.0
27/ 36/ 35 (C)	1.88854	-0.01017	-0.04966	0.0	0.0	0.0
27/ 36/ 36 (C)	2.14109	-0.02165	-0.04583	0.0	0.0	0.0
27/ 36/ 37 (C)	-3.09033	0.02456	0.07369	0.0	0.0	0.0

Bar/Node/Case			FX (kip)	FY (kip)	FZ (kip)	MX (kip-in)	MY (kip-in)	MZ (kip-in)
27/	36/	38 (C)	-3.09070	0.02458	0.07369	0.0	0.0	0.0
27/	36/	39 (C)	0.91490	-0.00233	-0.02613	0.0	0.0	0.0
27/	36/	40 (C)	1.16746	-0.01381	-0.02230	0.0	0.0	0.0
28/	36/	1	0.69517	0.00510	0.01531	0.0	0.0	0.0
28/	36/	2	-156.14068	-1.28845	-3.86535	0.0	0.0	0.0
28/	36/	3	-156.14068	-1.28845	3.86535	0.0	0.0	0.0
28/	36/	4	-156.14068	-1.28845	-3.86535	0.0	0.0	0.0
28/	36/	5	-8.71307	0.0	0.0	0.0	0.0	0.0
28/	36/	6	3.43700	0.0	0.0	0.0	0.0	0.0
28/	36/	7	4.07443	0.0	0.0	0.0	0.0	0.0
28/	36/	8	-85.03855	-3.86535	1.28845	0.0	0.0	0.0
28/	36/	9 (C)	1.16359	0.00897	0.02690	0.0	0.0	0.0
28/	36/	10 (C)	3.12281	0.02577	0.07731	0.0	0.0	0.0
28/	36/	11 (C)	-2.72778	-0.02040	-0.06119	0.0	0.0	0.0
28/	36/	12 (C)	-2.37059	-0.02040	-0.06119	0.0	0.0	0.0
28/	36/	13 (C)	-0.17858	-0.00812	0.00271	0.0	0.0	0.0
28/	36/	14 (C)	0.00856	0.0	0.0	0.0	0.0	0.0
28/	36/	15 (C)	1.16359	0.00897	0.02690	0.0	0.0	0.0
28/	36/	16 (C)	4.28640	0.03474	0.10421	0.0	0.0	0.0
28/	36/	17 (C)	-1.56420	-0.01143	-0.03429	0.0	0.0	0.0
28/	36/	18 (C)	-1.20711	-0.01143	0.03429	0.0	0.0	0.0
28/	36/	19 (C)	0.98501	0.00085	0.02961	0.0	0.0	0.0
28/	36/	20 (C)	1.17214	0.00897	0.02690	0.0	0.0	0.0
28/	36/	21 (C)	1.45985	0.01300	0.03899	0.0	0.0	0.0
28/	36/	22 (C)	1.72768	0.01300	0.03899	0.0	0.0	0.0
28/	36/	23 (C)	3.41194	0.02403	0.08630	0.0	0.0	0.0
28/	36/	24 (C)	3.51019	0.02829	0.08489	0.0	0.0	0.0
28/	36/	25 (C)	-2.02983	-0.01502	-0.04505	0.0	0.0	0.0
28/	36/	26 (C)	-1.67254	-0.01502	-0.04505	0.0	0.0	0.0
28/	36/	27 (C)	0.57315	-0.00030	0.01804	0.0	0.0	0.0
28/	36/	28 (C)	0.70414	0.00538	0.01614	0.0	0.0	0.0
28/	36/	29 (C)	1.62902	0.01255	0.03765	0.0	0.0	0.0
28/	36/	30 (C)	2.95771	0.02365	0.07094	0.0	0.0	0.0
28/	36/	31 (C)	4.21058	0.03567	0.10702	0.0	0.0	0.0
28/	36/	32 (C)	4.49625	0.03567	0.10702	0.0	0.0	0.0
28/	36/	33 (C)	-1.40674	-0.00899	-0.02697	0.0	0.0	0.0

Bar/Node/Case			FX (kip)	FY (kip)	FZ (kip)	MX (kip-in)	MY (kip-in)	MZ (kip-in)
28/	36/	34 (C)	-0.83540	-0.00899	-0.02697	0.0	0.0	0.0
28/	36/	35 (C)	1.84229	0.00780	0.05045	0.0	0.0	0.0
28/	36/	36 (C)	2.02943	0.01591	0.04774	0.0	0.0	0.0
28/	36/	37 (C)	-3.31723	-0.02456	-0.07369	0.0	0.0	0.0
28/	36/	38 (C)	-2.74588	-0.02456	-0.07369	0.0	0.0	0.0
28/	36/	39 (C)	0.86865	-0.00005	0.02692	0.0	0.0	0.0
28/	36/	40 (C)	1.05579	0.00807	0.02421	0.0	0.0	0.0
28/	37/	1	0.69517	-0.00510	-0.01531	0.0	0.0	0.0
28/	37/	2	-156.14068	1.28845	3.86535	0.0	0.0	0.0
28/	37/	3	-156.14068	1.28845	3.86535	0.0	0.0	0.0
28/	37/	4	-156.14068	1.28845	3.86535	0.0	0.0	0.0
28/	37/	5	-8.71307	0.0	0.0	0.0	0.0	0.0
28/	37/	6	3.43700	0.0	0.0	0.0	0.0	0.0
28/	37/	7	-4.07443	0.0	0.0	0.0	0.0	0.0
28/	37/	8	-85.03855	3.86535	-1.28845	0.0	0.0	0.0
28/	37/	9 (C)	1.16359	-0.00897	-0.02690	0.0	0.0	0.0
28/	37/	10 (C)	3.12281	-0.02577	-0.07731	0.0	0.0	0.0
28/	37/	11 (C)	-2.72778	0.02040	0.06119	0.0	0.0	0.0
28/	37/	12 (C)	-2.37059	0.02040	0.06119	0.0	0.0	0.0
28/	37/	13 (C)	-0.17858	0.00812	-0.00271	0.0	0.0	0.0
28/	37/	14 (C)	-0.00856	0.0	0.0	0.0	0.0	0.0
28/	37/	15 (C)	1.16359	-0.00897	-0.02690	0.0	0.0	0.0
28/	37/	16 (C)	4.28640	-0.03474	-0.10421	0.0	0.0	0.0
28/	37/	17 (C)	-1.56420	0.01143	0.03429	0.0	0.0	0.0
28/	37/	18 (C)	-1.20711	0.01143	0.03429	0.0	0.0	0.0
28/	37/	19 (C)	0.98501	-0.00085	-0.02961	0.0	0.0	0.0
28/	37/	20 (C)	1.15503	-0.00897	-0.02690	0.0	0.0	0.0
28/	37/	21 (C)	1.45985	-0.01300	-0.03899	0.0	0.0	0.0
28/	37/	22 (C)	1.72768	-0.01300	-0.03899	0.0	0.0	0.0
28/	37/	23 (C)	3.41194	-0.02403	-0.08630	0.0	0.0	0.0
28/	37/	24 (C)	3.50121	-0.02829	-0.08489	0.0	0.0	0.0
28/	37/	25 (C)	-2.02983	0.01502	0.04505	0.0	0.0	0.0
28/	37/	26 (C)	-1.67254	0.01502	0.04505	0.0	0.0	0.0
28/	37/	27 (C)	0.57315	0.00030	-0.01804	0.0	0.0	0.0
28/	37/	28 (C)	0.69218	-0.00538	-0.01614	0.0	0.0	0.0
28/	37/	29 (C)	1.62902	-0.01255	-0.03765	0.0	0.0	0.0

Bar/Node/Case			FX (kip)	FY (kip)	FZ (kip)	MX (kip-in)	MY (kip-in)	MZ (kip-in)
28/	37/	30 (C)	2.95771	-0.02365	-0.07094	0.0	0.0	0.0
28/	37/	31 (C)	4.21058	-0.03567	-0.10702	0.0	0.0	0.0
28/	37/	32 (C)	4.49625	-0.03567	-0.10702	0.0	0.0	0.0
28/	37/	33 (C)	-1.40674	0.00899	0.02697	0.0	0.0	0.0
28/	37/	34 (C)	-0.83540	0.00899	0.02697	0.0	0.0	0.0
28/	37/	35 (C)	1.84229	-0.00780	-0.05045	0.0	0.0	0.0
28/	37/	36 (C)	2.01231	-0.01591	-0.04774	0.0	0.0	0.0
28/	37/	37 (C)	-3.31723	0.02456	0.07369	0.0	0.0	0.0
28/	37/	38 (C)	-2.74588	0.02456	0.07369	0.0	0.0	0.0
28/	37/	39 (C)	0.86865	0.00005	-0.02692	0.0	0.0	0.0
28/	37/	40 (C)	1.03867	-0.00807	-0.02421	0.0	0.0	0.0
29/	37/	1	0.69517	0.00510	0.01531	0.0	0.0	0.0
29/	37/	2	-156.14068	-1.28845	-3.86535	0.0	0.0	0.0
29/	37/	3	-156.14068	-1.28845	-3.86535	0.0	0.0	0.0
29/	37/	4	-156.14068	-1.28845	-3.86535	0.0	0.0	0.0
29/	37/	5	-3.88792	0.0	0.0	0.0	0.0	0.0
29/	37/	6	7.26940	0.0	0.0	0.0	0.0	0.0
29/	37/	7	-57.25028	-2.73321	0.91107	0.0	0.0	0.0
29/	37/	8	-63.01240	-2.73321	0.91107	0.0	0.0	0.0
29/	37/	9 (C)	1.16359	0.00897	0.02690	0.0	0.0	0.0
29/	37/	10 (C)	3.12281	0.02577	0.07731	0.0	0.0	0.0
29/	37/	11 (C)	-2.58597	-0.02040	-0.06119	0.0	0.0	0.0
29/	37/	12 (C)	-2.25806	-0.02040	-0.06119	0.0	0.0	0.0
29/	37/	13 (C)	-0.13233	-0.00574	0.00191	0.0	0.0	0.0
29/	37/	14 (C)	-0.12023	-0.00574	0.00191	0.0	0.0	0.0
29/	37/	15 (C)	1.16359	0.00897	0.02690	0.0	0.0	0.0
29/	37/	16 (C)	4.28640	0.03474	0.10421	0.0	0.0	0.0
29/	37/	17 (C)	-1.42238	-0.01143	-0.03429	0.0	0.0	0.0
29/	37/	18 (C)	-1.09447	-0.01143	-0.03429	0.0	0.0	0.0
29/	37/	19 (C)	1.03126	0.00323	0.02882	0.0	0.0	0.0
29/	37/	20 (C)	1.04336	0.00323	0.02882	0.0	0.0	0.0
29/	37/	21 (C)	1.56622	0.01300	0.03899	0.0	0.0	0.0
29/	37/	22 (C)	1.81215	0.01300	0.03899	0.0	0.0	0.0
29/	37/	23 (C)	3.43623	0.02528	0.08589	0.0	0.0	0.0
29/	37/	24 (C)	3.44258	0.02528	0.08589	0.0	0.0	0.0
29/	37/	25 (C)	-1.88782	-0.01502	-0.04505	0.0	0.0	0.0

Bar/Node/Case			FX (kip)	FY (kip)	FZ (kip)	MX (kip-in)	MY (kip-in)	MZ (kip-in)
29/	37/	26 (C)	-1.55991	-0.01502	-0.04505	0.0	0.0	0.0
29/	37/	27 (C)	0.60552	0.00135	0.01748	0.0	0.0	0.0
29/	37/	28 (C)	0.61400	0.00135	0.01748	0.0	0.0	0.0
29/	37/	29 (C)	1.62902	0.01255	0.03768	0.0	0.0	0.0
29/	37/	30 (C)	2.95771	0.02365	0.07094	0.0	0.0	0.0
29/	37/	31 (C)	4.30403	0.03567	0.10702	0.0	0.0	0.0
29/	37/	32 (C)	4.58636	0.03567	0.10702	0.0	0.0	0.0
29/	37/	33 (C)	-1.17984	-0.00899	-0.02697	0.0	0.0	0.0
29/	37/	34 (C)	-0.65518	-0.00899	-0.02697	0.0	0.0	0.0
29/	37/	35 (C)	1.88854	0.01017	0.04966	0.0	0.0	0.0
29/	37/	36 (C)	1.90064	0.01017	0.04966	0.0	0.0	0.0
29/	37/	37 (C)	-3.09033	-0.02456	-0.07369	0.0	0.0	0.0
29/	37/	38 (C)	-2.56567	-0.02456	-0.07369	0.0	0.0	0.0
29/	37/	39 (C)	0.91490	0.00233	0.02613	0.0	0.0	0.0
29/	37/	40 (C)	0.92700	0.00233	0.02613	0.0	0.0	0.0
29/	38/	1	0.69517	-0.00510	-0.01531	0.0	0.0	0.0
29/	38/	2	-156.14068	1.28845	3.86535	0.0	0.0	0.0
29/	38/	3	-156.14068	1.28845	3.86535	0.0	0.0	0.0
29/	38/	4	-156.14068	1.28845	3.86535	0.0	0.0	0.0
29/	38/	5	-3.88792	0.0	0.0	0.0	0.0	0.0
29/	38/	6	7.26940	0.0	0.0	0.0	0.0	0.0
29/	38/	7	-63.01240	2.73321	-0.91107	0.0	0.0	0.0
29/	38/	8	-57.25028	2.73321	-0.91107	0.0	0.0	0.0
29/	38/	9 (C)	1.16359	-0.00897	-0.02690	0.0	0.0	0.0
29/	38/	10 (C)	3.12281	-0.02577	-0.07731	0.0	0.0	0.0
29/	38/	11 (C)	-2.58597	0.02040	0.06119	0.0	0.0	0.0
29/	38/	12 (C)	-2.25805	0.02040	0.06119	0.0	0.0	0.0
29/	38/	13 (C)	-0.12023	0.00574	-0.00191	0.0	0.0	0.0
29/	38/	14 (C)	-0.13233	0.00574	-0.00191	0.0	0.0	0.0
29/	38/	15 (C)	1.16359	-0.00897	-0.02690	0.0	0.0	0.0
29/	38/	16 (C)	4.28640	-0.03474	-0.10421	0.0	0.0	0.0
29/	38/	17 (C)	-1.42238	0.01143	0.03429	0.0	0.0	0.0
29/	38/	18 (C)	-1.09447	0.01143	0.03429	0.0	0.0	0.0
29/	38/	19 (C)	1.04336	-0.00323	-0.02882	0.0	0.0	0.0
29/	38/	20 (C)	1.03126	-0.00323	-0.02882	0.0	0.0	0.0
29/	38/	21 (C)	1.56622	-0.01300	-0.03899	0.0	0.0	0.0

Bar/Node/Case	FX (kip)	FY (kip)	FZ (kip)	MX (kip-in)	MY (kip-in)	MZ (kip-in)
29/ 38/ 22 (C)	1.81215	-0.01300	-0.03899	0.0	0.0	0.0
29/ 38/ 23 (C)	3.44258	-0.02528	-0.08589	0.0	0.0	0.0
29/ 38/ 24 (C)	3.43623	-0.02528	-0.08589	0.0	0.0	0.0
29/ 38/ 25 (C)	-1.88782	0.01502	0.04505	0.0	0.0	0.0
29/ 38/ 26 (C)	-1.55991	0.01502	0.04505	0.0	0.0	0.0
29/ 38/ 27 (C)	0.61400	-0.00135	-0.01748	0.0	0.0	0.0
29/ 38/ 28 (C)	0.60552	-0.00135	-0.01748	0.0	0.0	0.0
29/ 38/ 29 (C)	1.62902	-0.01255	-0.03766	0.0	0.0	0.0
29/ 38/ 30 (C)	2.95771	-0.02365	-0.07094	0.0	0.0	0.0
29/ 38/ 31 (C)	4.32403	-0.03567	-0.10702	0.0	0.0	0.0
29/ 38/ 32 (C)	4.58836	-0.03567	-0.10702	0.0	0.0	0.0
29/ 38/ 33 (C)	-1.17984	0.00899	0.02697	0.0	0.0	0.0
29/ 38/ 34 (C)	-0.65518	0.00899	0.02697	0.0	0.0	0.0
29/ 38/ 35 (C)	1.90064	-0.01017	-0.04966	0.0	0.0	0.0
29/ 38/ 36 (C)	1.88354	-0.01017	-0.04966	0.0	0.0	0.0
29/ 38/ 37 (C)	-3.09033	0.02459	0.07369	0.0	0.0	0.0
29/ 38/ 38 (C)	-2.58567	0.02459	0.07369	0.0	0.0	0.0
29/ 38/ 39 (C)	0.92700	-0.00233	-0.02613	0.0	0.0	0.0
29/ 38/ 40 (C)	0.91490	-0.00233	-0.02613	0.0	0.0	0.0
30/ 38/ 1	0.69517	0.00510	0.01531	0.0	0.0	0.0
30/ 38/ 2	-156.14068	-1.28845	-3.86535	0.0	0.0	0.0
30/ 38/ 3	-156.14068	-1.28845	-3.86535	0.0	0.0	0.0
30/ 38/ 4	-156.14068	-1.28845	-3.86535	0.0	0.0	0.0
30/ 38/ 5	3.43700	0.0	0.0	0.0	0.0	0.0
30/ 38/ 6	8.59740	0.0	0.0	0.0	0.0	0.0
30/ 38/ 7	-85.03855	-3.86535	1.28845	0.0	0.0	0.0
30/ 38/ 8	-4.07443	0.0	0.0	0.0	0.0	0.0
30/ 38/ 9 (C)	1.16359	0.00897	0.02690	0.0	0.0	0.0
30/ 38/ 10 (C)	3.12281	0.02577	0.07731	0.0	0.0	0.0
30/ 38/ 11 (C)	-2.37069	-0.02040	-0.06119	0.0	0.0	0.0
30/ 38/ 12 (C)	-2.21903	-0.02040	-0.06119	0.0	0.0	0.0
30/ 38/ 13 (C)	-0.00856	0.0	0.0	0.0	0.0	0.0
30/ 38/ 14 (C)	-0.17858	-0.00812	0.00271	0.0	0.0	0.0
30/ 38/ 15 (C)	1.16359	0.00897	0.02690	0.0	0.0	0.0
30/ 38/ 16 (C)	4.28640	0.03474	0.10421	0.0	0.0	0.0
30/ 38/ 17 (C)	-1.20711	0.01143	0.03429	0.0	0.0	0.0
30/ 38/ 18 (C)	-1.05544	0.01143	0.03429	0.0	0.0	0.0

Bar/Node/Case	FX (kip)	FY (kip)	FZ (kip)	MX (kip-in)	MY (kip-in)	MZ (kip-in)
30/ 38/ 19 (C)	-1.05544	-0.01143	-0.03429	0.0	0.0	0.0
30/ 38/ 19 (C)	1.15503	0.00897	0.02690	0.0	0.0	0.0
30/ 38/ 20 (C)	0.98501	0.00085	0.02961	0.0	0.0	0.0
30/ 38/ 21 (C)	1.72768	0.01300	0.03899	0.0	0.0	0.0
30/ 38/ 22 (C)	1.84143	0.01300	0.03899	0.0	0.0	0.0
30/ 38/ 23 (C)	3.50121	0.02629	0.08488	0.0	0.0	0.0
30/ 38/ 24 (C)	3.41194	0.02403	0.08630	0.0	0.0	0.0
30/ 38/ 25 (C)	1.67254	-0.01502	-0.04505	0.0	0.0	0.0
30/ 38/ 26 (C)	-1.52088	-0.01502	-0.04505	0.0	0.0	0.0
30/ 38/ 27 (C)	0.69216	0.00638	0.01614	0.0	0.0	0.0
30/ 38/ 28 (C)	0.57315	-0.00030	0.01804	0.0	0.0	0.0
30/ 38/ 29 (C)	1.62902	0.01255	0.03766	0.0	0.0	0.0
30/ 38/ 30 (C)	2.95771	0.02365	0.07094	0.0	0.0	0.0
30/ 38/ 31 (C)	4.49625	0.03567	0.10702	0.0	0.0	0.0
30/ 38/ 32 (C)	4.61758	0.03567	0.10702	0.0	0.0	0.0
30/ 38/ 33 (C)	-0.83540	-0.00899	-0.02697	0.0	0.0	0.0
30/ 38/ 34 (C)	-0.59273	-0.00899	-0.02697	0.0	0.0	0.0
30/ 38/ 35 (C)	2.01231	0.01591	0.04774	0.0	0.0	0.0
30/ 38/ 36 (C)	1.84229	0.00780	0.05045	0.0	0.0	0.0
30/ 38/ 37 (C)	-2.74588	-0.02456	-0.07369	0.0	0.0	0.0
30/ 38/ 38 (C)	-2.50322	-0.02456	-0.07369	0.0	0.0	0.0
30/ 38/ 39 (C)	1.03857	0.00807	0.02421	0.0	0.0	0.0
30/ 38/ 40 (C)	0.86855	-0.00005	0.02692	0.0	0.0	0.0
30/ 39/ 1	0.69517	-0.00510	-0.01531	0.0	0.0	0.0
30/ 39/ 2	-156.14068	1.28845	3.86535	0.0	0.0	0.0
30/ 39/ 3	-156.14068	1.28845	3.86535	0.0	0.0	0.0
30/ 39/ 4	-156.14068	1.28845	3.86535	0.0	0.0	0.0
30/ 39/ 5	3.43700	0.0	0.0	0.0	0.0	0.0
30/ 39/ 6	8.59740	- 0.0	0.0	0.0	0.0	0.0
30/ 39/ 7	-85.03855	3.86535	-1.28845	0.0	0.0	0.0
30/ 39/ 8	4.07443	0.0	0.0	0.0	0.0	0.0
30/ 39/ 9 (C)	1.16359	-0.00897	-0.02690	0.0	0.0	0.0
30/ 39/ 10 (C)	3.12281	-0.02577	-0.07731	0.0	0.0	0.0
30/ 39/ 11 (C)	-2.37069	0.02040	0.06119	0.0	0.0	0.0
30/ 39/ 12 (C)	-2.21903	0.02040	0.06119	0.0	0.0	0.0
30/ 39/ 13 (C)	0.00856	0.0	0.0	0.0	0.0	0.0

Bar/Node/Case	FX (kip)	FY (kip)	FZ (kip)	MX (kip-in)	MY (kip-in)	MZ (kip-in)
30/ 39/ 14 (C)	-0.17858	0.00812	-0.00271	0.0	0.0	0.0
30/ 39/ 15 (C)	1.16359	-0.00897	-0.02690	0.0	0.0	0.0
30/ 39/ 16 (C)	4.28640	-0.03474	-0.10421	0.0	0.0	0.0
30/ 39/ 17 (C)	-1.20711	0.01143	0.03429	0.0	0.0	0.0
30/ 39/ 18 (C)	-1.05544	0.01143	0.03429	0.0	0.0	0.0
30/ 39/ 19 (C)	1.17214	-0.00897	-0.02690	0.0	0.0	0.0
30/ 39/ 20 (C)	0.98501	-0.00085	-0.02961	0.0	0.0	0.0
30/ 39/ 21 (C)	1.72768	-0.01300	-0.03899	0.0	0.0	0.0
30/ 39/ 22 (C)	1.84143	-0.01300	-0.03899	0.0	0.0	0.0
30/ 39/ 23 (C)	3.51019	-0.02629	-0.08488	0.0	0.0	0.0
30/ 39/ 24 (C)	3.41194	-0.02403	-0.08630	0.0	0.0	0.0
30/ 39/ 25 (C)	-1.67254	0.01502	0.04505	0.0	0.0	0.0
30/ 39/ 26 (C)	-1.52088	0.01502	0.04505	0.0	0.0	0.0
30/ 39/ 27 (C)	0.70414	-0.00638	-0.01614	0.0	0.0	0.0
30/ 39/ 28 (C)	0.57315	0.00030	-0.01804	0.0	0.0	0.0
30/ 39/ 29 (C)	1.62902	-0.01255	-0.03766	0.0	0.0	0.0
30/ 39/ 30 (C)	2.95771	-0.02365	-0.07094	0.0	0.0	0.0
30/ 39/ 31 (C)	4.49625	-0.03567	-0.10702	0.0	0.0	0.0
30/ 39/ 32 (C)	4.61758	-0.03567	-0.10702	0.0	0.0	0.0
30/ 39/ 33 (C)	-0.83540	0.00899	0.02697	0.0	0.0	0.0
30/ 39/ 34 (C)	-0.59273	0.00899	0.02697	0.0	0.0	0.0
30/ 39/ 35 (C)	2.02943	-0.01591	-0.04774	0.0	0.0	0.0
30/ 39/ 36 (C)	1.84229	-0.00780	-0.05045	0.0	0.0	0.0
30/ 39/ 37 (C)	-2.74588	0.02456	0.07369	0.0	0.0	0.0
30/ 39/ 38 (C)	-2.50322	0.02456	0.07369	0.0	0.0	0.0
30/ 39/ 39 (C)	1.05578	-0.00807	-0.02421	0.0	0.0	0.0
30/ 39/ 40 (C)	0.86855	0.00005	-0.02692	0.0	0.0	0.0
31/ 39/ 1	0.69517	0.00510	0.01531	0.0	0.0	0.0
31/ 39/ 2	-156.14068	-1.28845	-3.86535	0.0	0.0	0.0
31/ 39/ 3	-156.14068	-1.28845	-3.86535	0.0	0.0	0.0
31/ 39/ 4	-156.14068	-1.28845	-3.86535	0.0	0.0	0.0
31/ 39/ 6	7.26151	0.0	0.0	0.0	0.0	0.0
31/ 39/ 6	7.26940	0.0	0.0	0.0	0.0	0.0
31/ 39/ 7	-83.01240	-2.73321	0.91107	0.0	0.0	0.0
31/ 39/ 8	57.25028	2.73321	-0.91107	0.0	0.0	0.0
31/ 39/ 9 (C)	1.16359	0.00897	0.02690	0.0	0.0	0.0

Bar/Node/Case	FX (kip)	FY (kip)	FZ (kip)	MX (kip-in)	MY (kip-in)	MZ (kip-in)
31/ 39/ 10 (C)	3.12281	0.02577	0.07731	0.0	0.0	0.0
31/ 39/ 11 (C)	-2.25829	-0.02040	-0.06119	0.0	0.0	0.0
31/ 39/ 12 (C)	-2.25806	-0.02040	-0.06119	0.0	0.0	0.0
31/ 39/ 13 (C)	0.12023	0.00574	-0.00191	0.0	0.0	0.0
31/ 39/ 14 (C)	-0.13233	-0.00574	0.00191	0.0	0.0	0.0
31/ 39/ 15 (C)	1.16359	0.00897	0.02690	0.0	0.0	0.0
31/ 39/ 16 (C)	4.28640	0.03474	0.10421	0.0	0.0	0.0
31/ 39/ 17 (C)	-1.09470	-0.01143	-0.03429	0.0	0.0	0.0
31/ 39/ 18 (C)	-1.09447	-0.01143	-0.03429	0.0	0.0	0.0
31/ 39/ 19 (C)	1.28381	0.01471	0.02499	0.0	0.0	0.0
31/ 39/ 20 (C)	1.03126	0.00323	0.02882	0.0	0.0	0.0
31/ 39/ 21 (C)	1.81198	0.01300	0.03899	0.0	0.0	0.0
31/ 39/ 22 (C)	1.81215	0.01300	0.03899	0.0	0.0	0.0
31/ 39/ 23 (C)	3.56882	0.03131	0.08388	0.0	0.0	0.0
31/ 39/ 24 (C)	3.43623	0.02528	0.08589	0.0	0.0	0.0
31/ 39/ 25 (C)	-1.55014	-0.01502	-0.04505	0.0	0.0	0.0
31/ 39/ 26 (C)	-1.55991	-0.01502	-0.04505	0.0	0.0	0.0
31/ 39/ 27 (C)	0.78231	0.00940	0.01480	0.0	0.0	0.0
31/ 39/ 28 (C)	0.60552	0.00135	0.01748	0.0	0.0	0.0
31/ 39/ 29 (C)	1.62902	0.01255	0.03766	0.0	0.0	0.0
31/ 39/ 30 (C)	2.95771	0.02365	0.07094	0.0	0.0	0.0
31/ 39/ 31 (C)	4.58617	0.03567	0.10702	0.0	0.0	0.0
31/ 39/ 32 (C)	4.59636	0.03567	0.10702	0.0	0.0	0.0
31/ 39/ 33 (C)	-0.65555	-0.00899	-0.02697	0.0	0.0	0.0
31/ 39/ 34 (C)	-0.65518	-0.00899	-0.02697	0.0	0.0	0.0
31/ 39/ 35 (C)	2.14109	0.02165	0.04583	0.0	0.0	0.0
31/ 39/ 36 (C)	1.88354	0.01017	0.04966	0.0	0.0	0.0
31/ 39/ 37 (C)	-2.58604	0.02456	-0.07369	0.0	0.0	0.0
31/ 39/ 38 (C)	-2.58567	0.02456	-0.07369	0.0	0.0	0.0
31/ 39/ 39 (C)	1.16746	0.01381	0.02230	0.0	0.0	0.0
31/ 39/ 40 (C)	0.91490	0.00233	0.02613	0.0	0.0	0.0
31/ 40/ 1	0.69517	-0.00510	-0.01531	0.0	0.0	0.0
31/ 40/ 2	-156.14068	1.28845	3.86535	0.0	0.0	0.0
31/ 40/ 3	-156.14068	1.28845	3.86535	0.0	0.0	0.0
31/ 40/ 4	-156.14068	1.28845	3.86535	0.0	0.0	0.0
31/ 40/ 5	7.26151	0.0	0.0	0.0	0.0	0.0

Bar/Node/Case	FX (kip)	FY (kip)	FZ (kip)	MX (kip-in)	MY (kip-in)	MZ (kip-in)
31/ 40/ 6	7.26940	0.0	0.0	0.0	0.0	0.0
31/ 40/ 7	-57.25028	2.73321	-0.91107	0.0	0.0	0.0
31/ 40/ 8	63.01240	-2.73321	0.91107	0.0	0.0	0.0
31/ 40/ 9 (C)	1.16359	0.00897	-0.02690	0.0	0.0	0.0
31/ 40/ 10 (C)	3.12281	-0.02577	-0.07731	0.0	0.0	0.0
31/ 40/ 11 (C)	-2.25926	0.02040	0.05119	0.0	0.0	0.0
31/ 40/ 12 (C)	-2.25906	0.02040	0.05119	0.0	0.0	0.0
31/ 40/ 13 (C)	0.13233	-0.00574	0.00191	0.0	0.0	0.0
31/ 40/ 14 (C)	-0.12023	0.00574	-0.00191	0.0	0.0	0.0
31/ 40/ 15 (C)	1.16359	-0.00897	-0.02690	0.0	0.0	0.0
31/ 40/ 16 (C)	4.28640	-0.03474	-0.10421	0.0	0.0	0.0
31/ 40/ 17 (C)	-1.09470	0.01143	0.03429	0.0	0.0	0.0
31/ 40/ 18 (C)	-1.09447	0.01143	0.03429	0.0	0.0	0.0
31/ 40/ 19 (C)	1.29591	-0.01471	-0.02498	0.0	0.0	0.0
31/ 40/ 20 (C)	1.04336	-0.00323	-0.02883	0.0	0.0	0.0
31/ 40/ 21 (C)	1.81198	-0.01303	-0.03899	0.0	0.0	0.0
31/ 40/ 22 (C)	1.81215	-0.01303	-0.03890	0.0	0.0	0.0
31/ 40/ 23 (C)	3.57517	-0.03131	-0.08386	0.0	0.0	0.0
31/ 40/ 24 (C)	3.44258	-0.02528	-0.08588	0.0	0.0	0.0
31/ 40/ 25 (C)	-1.56014	0.01502	0.04505	0.0	0.0	0.0
31/ 40/ 26 (C)	-1.55991	0.01502	0.04505	0.0	0.0	0.0
31/ 40/ 27 (C)	0.79078	-0.00940	-0.01480	0.0	0.0	0.0
31/ 40/ 28 (C)	0.61400	-0.00138	-0.01748	0.0	0.0	0.0
31/ 40/ 29 (C)	1.62902	-0.01255	-0.03766	0.0	0.0	0.0
31/ 40/ 30 (C)	2.95771	-0.02365	-0.07094	0.0	0.0	0.0
31/ 40/ 31 (C)	4.58617	-0.03567	-0.10702	0.0	0.0	0.0
31/ 40/ 32 (C)	4.58636	-0.03567	-0.10702	0.0	0.0	0.0
31/ 40/ 33 (C)	-0.65555	0.00899	0.02697	0.0	0.0	0.0
31/ 40/ 34 (C)	-0.65518	0.00899	0.02697	0.0	0.0	0.0
31/ 40/ 35 (C)	2.15319	-0.02165	-0.04583	0.0	0.0	0.0
31/ 40/ 36 (C)	1.90064	-0.01017	-0.04966	0.0	0.0	0.0
31/ 40/ 37 (C)	-2.56604	0.02456	0.07369	0.0	0.0	0.0
31/ 40/ 38 (C)	-2.56567	0.02456	0.07369	0.0	0.0	0.0
31/ 40/ 39 (C)	1.17966	-0.01381	-0.02230	0.0	0.0	0.0
31/ 40/ 40 (C)	0.92700	-0.00233	-0.02613	0.0	0.0	0.0
32/ 40/ 1	0.69517	0.00510	0.01531	0.0	0.0	0.0

Bar/Node/Case	FX (kip)	FY (kip)	FZ (kip)	MX (kip-in)	MY (kip-in)	MZ (kip-in)
32/ 40/ 2	-156.14068	-1.28845	-3.86535	0.0	0.0	0.0
32/ 40/ 3	-156.14068	-1.28845	-3.86535	0.0	0.0	0.0
32/ 40/ 4	-156.14068	-1.28845	-3.86535	0.0	0.0	0.0
32/ 40/ 5	8.58624	0.0	0.0	0.0	0.0	0.0
32/ 40/ 6	3.43700	0.0	0.0	0.0	0.0	0.0
32/ 40/ 7	4.07443	0.0	0.0	0.0	0.0	0.0
32/ 40/ 8	85.03855	3.86535	-1.28845	0.0	0.0	0.0
32/ 40/ 9 (C)	1.16359	0.00897	0.02690	0.0	0.0	0.0
32/ 40/ 10 (C)	3.12281	0.02577	0.07731	0.0	0.0	0.0
32/ 40/ 11 (C)	-2.21936	-0.02040	-0.05119	0.0	0.0	0.0
32/ 40/ 12 (C)	-2.37069	-0.02040	-0.05119	0.0	0.0	0.0
32/ 40/ 13 (C)	0.17858	0.00812	-0.00271	0.0	0.0	0.0
32/ 40/ 14 (C)	-0.00856	0.0	0.0	0.0	0.0	0.0
32/ 40/ 15 (C)	1.16359	0.00897	0.02690	0.0	0.0	0.0
32/ 40/ 16 (C)	4.28640	0.03474	0.10421	0.0	0.0	0.0
32/ 40/ 17 (C)	-1.05577	-0.01143	-0.03429	0.0	0.0	0.0
32/ 40/ 18 (C)	-1.20711	-0.01143	-0.03429	0.0	0.0	0.0
32/ 40/ 19 (C)	1.34217	0.01708	0.02420	0.0	0.0	0.0
32/ 40/ 20 (C)	1.15503	0.00897	0.02690	0.0	0.0	0.0
32/ 40/ 21 (C)	1.84118	0.01300	0.03899	0.0	0.0	0.0
32/ 40/ 22 (C)	1.72768	0.01300	0.03899	0.0	0.0	0.0
32/ 40/ 23 (C)	3.59045	0.03256	0.08346	0.0	0.0	0.0
32/ 40/ 24 (C)	3.50121	0.02829	0.08488	0.0	0.0	0.0
32/ 40/ 25 (C)	-1.52120	-0.01502	-0.04505	0.0	0.0	0.0
32/ 40/ 26 (C)	-1.67254	-0.01502	-0.04505	0.0	0.0	0.0
32/ 40/ 27 (C)	0.82316	0.01106	0.01425	0.0	0.0	0.0
32/ 40/ 28 (C)	0.69216	0.00538	0.01614	0.0	0.0	0.0
32/ 40/ 29 (C)	1.62902	0.01255	0.03766	0.0	0.0	0.0
32/ 40/ 30 (C)	2.95771	0.02365	0.07094	0.0	0.0	0.0
32/ 40/ 31 (C)	4.61732	0.03567	0.10702	0.0	0.0	0.0
32/ 40/ 32 (C)	4.49625	0.03567	0.10702	0.0	0.0	0.0
32/ 40/ 33 (C)	-0.59326	-0.00899	-0.02697	0.0	0.0	0.0
32/ 40/ 34 (C)	-0.83540	-0.00899	-0.02697	0.0	0.0	0.0
32/ 40/ 35 (C)	2.19945	0.02403	0.04504	0.0	0.0	0.0
32/ 40/ 36 (C)	2.01231	0.01591	0.04774	0.0	0.0	0.0
32/ 40/ 37 (C)	-2.50374	-0.02456	-0.07369	0.0	0.0	0.0

Bar/Node/Case	FX (kip)	FY (kip)	FZ (kip)	MX (kip-in)	MY (kip-in)	MZ (kip-in)
32/ 40/ 38 (C)	-2.74588	-0.02456	-0.07369	0.0	0.0	0.0
32/ 40/ 39 (C)	1.22581	0.01619	0.02151	0.0	0.0	0.0
32/ 40/ 40 (C)	1.03867	0.00807	0.02421	0.0	0.0	0.0
32/ 33/ 1	0.69517	-0.00510	-0.01531	0.0	0.0	0.0
32/ 33/ 2	-156.14068	1.28845	3.86535	0.0	0.0	0.0
32/ 33/ 3	-156.14068	1.28845	3.86535	0.0	0.0	0.0
32/ 33/ 4	-156.14068	1.28845	3.86535	0.0	0.0	0.0
32/ 33/ 5	8.58624	0.0	0.0	0.0	0.0	0.0
32/ 33/ 6	3.43700	0.0	0.0	0.0	0.0	0.0
32/ 33/ 7	4.07443	0.0	0.0	0.0	0.0	0.0
32/ 33/ 8	85.03855	-3.86535	1.28845	0.0	0.0	0.0
32/ 33/ 9 (C)	1.16359	-0.00897	-0.02690	0.0	0.0	0.0
32/ 33/ 10 (C)	3.12281	-0.02577	-0.07731	0.0	0.0	0.0
32/ 33/ 11 (C)	-2.21936	0.02040	0.05119	0.0	0.0	0.0
32/ 33/ 12 (C)	-2.37069	0.02040	0.05119	0.0	0.0	0.0
32/ 33/ 13 (C)	0.17858	-0.00812	0.00271	0.0	0.0	0.0
32/ 33/ 14 (C)	0.00856	0.0	0.0	0.0	0.0	0.0
32/ 33/ 15 (C)	1.16359	-0.00897	-0.02690	0.0	0.0	0.0
32/ 33/ 16 (C)	4.28640	-0.03474	-0.10421	0.0	0.0	0.0
32/ 33/ 17 (C)	-1.05577	0.01143	0.03429	0.0	0.0	0.0
32/ 33/ 18 (C)	-1.20711	0.01143	0.03429	0.0	0.0	0.0
32/ 33/ 19 (C)	1.34217	-0.01708	-0.02420	0.0	0.0	0.0
32/ 33/ 20 (C)	1.17214	-0.00897	-0.02690	0.0	0.0	0.0
32/ 33/ 21 (C)	1.84118	-0.01300	-0.03899	0.0	0.0	0.0
32/ 33/ 22 (C)	1.72768	-0.01300	-0.03899	0.0	0.0	0.0
32/ 33/ 23 (C)	3.59945	-0.03256	-0.08346	0.0	0.0	0.0
32/ 33/ 24 (C)	3.51019	-0.02829	-0.08488	0.0	0.0	0.0
32/ 33/ 25 (C)	-1.52120	0.01502	0.04505	0.0	0.0	0.0
32/ 33/ 26 (C)	-1.67254	0.01502	0.04505	0.0	0.0	0.0
32/ 33/ 27 (C)	0.82316	-0.01106	-0.01425	0.0	0.0	0.0
32/ 33/ 28 (C)	0.70414	-0.00538	-0.01614	0.0	0.0	0.0
32/ 33/ 29 (C)	1.62902	-0.01255	-0.03766	0.0	0.0	0.0
32/ 33/ 30 (C)	2.95771	-0.02365	-0.07094	0.0	0.0	0.0
32/ 33/ 31 (C)	4.61732	-0.03567	-0.10702	0.0	0.0	0.0
32/ 33/ 32 (C)	4.49625	-0.03567	-0.10702	0.0	0.0	0.0
32/ 33/ 33 (C)	-0.59326	0.00899	0.02697	0.0	0.0	0.0

Bar/Node/Case	FX (kip)	FY (kip)	FZ (kip)	MX (kip-in)	MY (kip-in)	MZ (kip-in)
32/ 33/ 34 (C)	-0.83540	0.00899	0.02697	0.0	0.0	0.0
32/ 33/ 35 (C)	2.19945	-0.02403	-0.04504	0.0	0.0	0.0
32/ 33/ 36 (C)	2.02943	-0.01591	-0.04774	0.0	0.0	0.0
32/ 33/ 37 (C)	-2.50374	0.02456	0.07369	0.0	0.0	0.0
32/ 33/ 38 (C)	-2.74588	0.02456	0.07369	0.0	0.0	0.0
32/ 33/ 39 (C)	1.22581	-0.01619	-0.02151	0.0	0.0	0.0
32/ 33/ 40 (C)	1.05579	-0.00807	-0.02421	0.0	0.0	0.0
33/ 33/ 1	0.13633	-0.00000	0.08330	0.00000	-0.01125	-0.00000
33/ 33/ 2	-27.22027	0.00000	-14.92101	-0.00000	124.62111	0.00000
33/ 33/ 3	-27.22027	0.00000	-14.92101	-0.00000	124.62111	0.00000
33/ 33/ 4	-27.22027	0.00000	-14.92101	-0.00000	124.62111	0.00000
33/ 33/ 5	4.22363	1.28187	5.66287	4.49103	-15.32637	-1.38306
33/ 33/ 6	-4.11379	4.96669	-9.71552	6.78041	100.44259	2.08809
33/ 33/ 7	9.74622	-44.28108	2.49167	-84.49073	219.16226	19.86240
33/ 33/ 8	23.52945	18.34182	6.01543	26.71542	529.10451	-8.22728
33/ 33/ 9 (C)	0.21799	-0.00000	0.12808	0.00000	-1.28511	-0.00000
33/ 33/ 10 (C)	0.54441	-0.00000	0.29842	0.00000	-2.49242	-0.00000
33/ 33/ 11 (C)	-0.30676	0.03767	-0.06977	0.13199	1.49202	-0.04065
33/ 33/ 12 (C)	-0.55180	0.14597	-0.52174	0.19928	4.92476	-0.06137
33/ 33/ 13 (C)	0.04941	0.03852	0.01263	0.05610	1.11112	-0.01728
33/ 33/ 14 (C)	0.02047	-0.09299	0.00523	-0.13544	0.46024	0.04171
33/ 33/ 15 (C)	0.21799	-0.00000	0.12808	0.00000	-1.28511	-0.00000
33/ 33/ 16 (C)	0.78240	-0.00000	0.42548	0.00000	-3.77754	-0.00000
33/ 33/ 17 (C)	-0.08877	0.03767	0.05829	0.13199	0.20791	-0.04065
33/ 33/ 18 (C)	-0.33381	0.14597	-0.39368	0.19928	3.63955	-0.06137
33/ 33/ 19 (C)	0.26740	0.03852	0.14069	0.05610	-0.17399	-0.01728
33/ 33/ 20 (C)	0.23846	-0.09299	0.13329	-0.13544	-0.82487	0.04171
33/ 33/ 21 (C)	0.39622	0.02826	0.29955	0.09899	-2.03474	-0.03049
33/ 33/ 22 (C)	0.21244	0.10948	-0.03943	0.14948	0.53914	-0.04603
33/ 33/ 23 (C)	0.65224	0.02022	0.35851	0.02945	-2.57109	-0.00907
33/ 33/ 24 (C)	0.65704	-0.04882	0.35462	-0.07111	-2.91280	0.02190
33/ 33/ 25 (C)	-0.17597	0.03767	0.00707	0.13199	0.72185	-0.04065
33/ 33/ 26 (C)	-0.47101	0.14597	-0.44490	0.19928	4.15369	-0.06137
33/ 33/ 27 (C)	0.18538	0.02698	0.08568	0.03927	0.00672	-0.01209
33/ 33/ 28 (C)	0.14512	-0.06509	0.08050	-0.09481	-0.44890	0.02920
33/ 33/ 29 (C)	0.30519	-0.00000	0.17928	0.00000	-1.79916	-0.00000

Bar/Node/Case			FX (kip)	FY (kip)	FZ (kip)	MX (kip-in)	MY (kip-in)	MZ (kip-in)
33/	33/	30 (C)	0.53379	-0.00000	0.30288	0.00000	-2.78835	-0.00000
33/	33/	31 (C)	0.88723	0.03014	0.57533	0.10559	-4.33568	-0.03252
33/	33/	32 (C)	0.89123	0.11678	0.21375	0.15942	-1.59028	-0.04910
33/	33/	33 (C)	0.04297	0.06028	0.19125	0.21119	-0.39968	-0.06504
33/	33/	34 (C)	-0.34906	0.23355	-0.53190	0.31884	5.09127	-0.09819
33/	33/	35 (C)	0.41988	0.03852	0.22599	0.05610	-0.92950	-0.01728
33/	33/	36 (C)	0.39034	-0.09299	0.21859	-0.13544	-1.58038	0.04171
33/	33/	37 (C)	-0.29463	0.06028	0.00362	0.21119	1.23207	-0.06504
33/	33/	38 (C)	0.68669	0.23355	-0.71953	0.31884	6.72301	-0.09819
33/	33/	39 (C)	0.24560	0.03852	0.12788	0.05610	-0.04548	-0.01728
33/	33/	40 (C)	0.21666	-0.09299	0.12049	-0.13544	-0.69636	0.04171
33/	49/	1	0.11394	-0.00000	0.08330	0.00000	1.08784	-0.00000
33/	49/	2	-27.22027	0.00000	-14.92101	-0.00000	-233.48305	0.00000
33/	49/	3	-27.22027	0.00000	-14.92101	-0.00000	-233.48305	0.00000
33/	49/	4	-27.22027	0.00000	-14.92101	-0.00000	-233.48305	0.00000
33/	49/	5	4.22363	1.28187	5.86287	4.49103	119.58252	-32.14795
33/	49/	6	-4.11379	4.98669	-9.71552	6.78041	-132.72991	-121.28874
33/	49/	7	9.74622	-44.28108	2.49167	-64.49673	278.96238	1082.60829
33/	49/	8	23.52945	18.34182	6.01543	26.71542	673.47475	-448.43104
33/	49/	9 (C)	0.19560	-0.00000	0.12806	0.00000	1.78829	-0.00000
33/	49/	10 (C)	0.54441	-0.00000	0.29842	0.00000	4.66966	-0.00000
33/	49/	11 (C)	-0.30676	0.03767	-0.06977	0.13199	-0.18151	-0.94483
33/	49/	12 (C)	-0.55180	0.14597	-0.52174	0.19928	-7.59597	-3.56468
33/	49/	13 (C)	0.04941	0.03852	0.01263	0.05610	1.41430	-0.94171
33/	49/	14 (C)	0.02047	-0.09299	0.00523	-0.13544	0.58582	2.27348
33/	49/	15 (C)	0.19560	-0.00000	0.12806	0.00000	1.78829	-0.00000
33/	49/	16 (C)	0.74001	-0.00000	0.42648	0.00000	6.45795	-0.00000
33/	49/	17 (C)	-0.11116	0.03767	0.05829	0.13199	1.60578	-0.94483
33/	49/	18 (C)	-0.35620	0.14597	-0.39368	0.19928	-5.80868	-3.56468
33/	49/	19 (C)	0.24501	0.03852	0.14069	0.05610	3.20258	-0.94171
33/	49/	20 (C)	0.21607	-0.09299	0.13329	-0.13544	2.37411	2.27348
33/	49/	21 (C)	0.37383	0.02829	0.29955	0.09899	5.15440	-0.70882
33/	49/	22 (C)	0.19009	0.10948	-0.03943	0.14948	-0.40710	-2.67351
33/	49/	23 (C)	0.62989	0.02022	0.35851	0.02945	6.03304	-0.49440
33/	49/	24 (C)	0.61465	-0.04882	0.35462	-0.07111	5.59809	1.19356
33/	49/	25 (C)	-0.18940	0.03767	0.00707	0.13199	0.89147	-0.94483

Bar/Node/Case			FX (kip)	FY (kip)	FZ (kip)	MX (kip-in)	MY (kip-in)	MZ (kip-in)
33/	49/	26 (C)	-0.43444	0.14597	-0.44990	0.19928	-6.52400	-3.56468
33/	49/	27 (C)	0.15195	0.02696	0.08568	0.03927	2.06298	-0.65919
33/	49/	28 (C)	0.13169	-0.06509	0.08050	-0.09481	1.48305	1.59143
33/	49/	29 (C)	0.27384	-0.00000	0.17928	0.00000	2.50360	-0.00000
33/	49/	30 (C)	0.50692	-0.00000	0.30288	0.00000	4.48077	-0.00000
33/	49/	31 (C)	0.86036	0.03014	0.57533	0.10559	9.47220	-0.75586
33/	49/	32 (C)	0.86435	0.11678	0.21375	0.15942	3.53983	-2.85174
33/	49/	33 (C)	0.01610	0.06028	0.19125	0.21119	4.19030	-1.51173
33/	49/	34 (C)	-0.37596	0.23355	-0.53190	0.31884	-7.67438	-5.70348
33/	49/	35 (C)	0.39301	0.03852	0.22599	0.05610	4.49417	-0.94171
33/	49/	36 (C)	0.36407	-0.09299	0.21859	-0.13544	3.66570	2.27348
33/	49/	37 (C)	-0.31478	0.06028	0.00362	0.21119	1.31905	-1.51173
33/	49/	38 (C)	-0.70884	0.23355	-0.71953	0.31884	-10.54569	-5.70348
33/	49/	39 (C)	0.22545	0.03852	0.12788	0.05610	3.02375	-0.94171
33/	49/	40 (C)	0.19651	-0.09299	0.12049	-0.13544	2.19528	2.27348
34/	34/	1	0.13633	-0.00000	0.08330	0.00000	-0.91125	-0.00000
34/	34/	2	-27.22027	0.00000	-14.92101	-0.00000	124.62111	0.00000
34/	34/	3	-27.22027	0.00000	-14.92101	-0.00000	124.62111	0.00000
34/	34/	4	-27.22027	0.00000	-14.92101	-0.00000	124.62111	0.00000
34/	34/	5	-0.45674	3.47164	-4.04884	10.92321	89.62626	-3.36391
34/	34/	6	0.32849	2.77251	7.33449	0.37343	-150.44830	-0.11500
34/	34/	7	23.52945	-18.34182	6.01543	-26.71542	529.10451	8.22728
34/	34/	8	9.74622	44.28108	2.49167	64.49673	219.16228	-19.86240
34/	34/	9 (C)	0.21799	-0.00000	0.12806	0.00000	-1.28511	-0.00000
34/	34/	10 (C)	0.54441	-0.00000	0.29842	0.00000	-2.49242	-0.00000
34/	34/	11 (C)	-0.44432	0.10203	-0.35519	0.32103	4.80887	-0.09887
34/	34/	12 (C)	-0.42124	0.08148	-0.02064	0.01098	-2.74282	-0.00338
34/	34/	13 (C)	0.02047	0.09299	0.00523	0.13544	0.46024	-0.04171
34/	34/	14 (C)	0.04941	-0.03852	0.01263	-0.05610	1.11112	0.01728
34/	34/	15 (C)	0.21799	-0.00000	0.12806	0.00000	-1.28511	-0.00000
34/	34/	16 (C)	0.76240	-0.00000	0.42648	0.00000	-3.77754	-0.00000
34/	34/	17 (C)	-0.22633	0.10203	-0.22714	0.32103	3.32175	-0.09887
34/	34/	18 (C)	-0.20325	0.08148	0.10742	0.01098	-4.02794	-0.00338
34/	34/	19 (C)	0.23846	0.09299	0.13329	0.13544	-0.82487	-0.04171
34/	34/	20 (C)	0.26740	-0.03852	0.14069	-0.05610	-0.17399	0.01728
34/	34/	21 (C)	0.29305	0.07652	0.08548	0.24077	0.30072	-0.07415

Bar/Node/Case			FX (kip)	FY (kip)	FZ (kip)	MX (kip-in)	MY (kip-in)	MZ (kip-in)
34/	34/	22 (C)	0.31036	0.06111	0.33639	0.00823	-5.21155	-0.00253
34/	34/	23 (C)	0.63704	0.04882	0.35462	0.07111	-2.91280	-0.02190
34/	34/	24 (C)	0.65224	-0.02022	0.35851	-0.02945	-2.57109	0.00907
34/	34/	25 (C)	-0.31353	0.10203	-0.27836	0.32103	3.83580	-0.09887
34/	34/	26 (C)	-0.29045	0.08148	0.05620	0.01098	-3.51389	-0.00338
34/	34/	27 (C)	0.14512	0.06509	0.08050	0.09481	-0.44690	-0.02920
34/	34/	28 (C)	0.16538	-0.02696	0.08568	-0.03927	0.00672	0.01209
34/	34/	29 (C)	0.30519	-0.00000	0.17928	0.00000	-1.79916	-0.00000
34/	34/	30 (C)	0.53379	-0.00000	0.30288	0.00000	-2.78835	-0.00000
34/	34/	31 (C)	0.77718	0.08163	0.34699	0.25683	-1.84452	-0.07909
34/	34/	32 (C)	0.79564	0.06519	0.61463	0.00878	-7.72427	-0.00270
34/	34/	33 (C)	-0.17712	0.16325	-0.26543	0.51365	4.58264	-0.15818
34/	34/	34 (C)	-0.14020	0.13037	0.26986	0.01756	-7.17687	-0.00541
34/	34/	35 (C)	0.39094	0.09299	0.21859	0.13544	-1.58038	-0.04171
34/	34/	36 (C)	0.41988	0.03852	0.22599	-0.05610	-0.92950	0.01728
34/	34/	37 (C)	-0.51472	0.16325	-0.45306	0.51365	6.21430	-0.15818
34/	34/	38 (C)	-0.47780	0.13037	0.08223	0.01756	-5.54512	-0.00541
34/	34/	39 (C)	0.21666	0.09299	0.12049	0.13544	-0.69636	-0.04171
34/	34/	40 (C)	0.24560	-0.03852	0.12788	-0.05610	-0.04548	0.01728
34/	60/	1	0.11394	-0.00000	0.08330	0.00000	1.08784	-0.00000
34/	50/	2	-27.22027	0.00000	-14.92101	-0.00000	-233.48304	0.00000
34/	60/	3	-27.22027	0.00000	-14.92101	-0.00000	-233.48304	0.00000
34/	60/	4	-27.22027	0.00000	-14.92101	-0.00000	-233.48304	0.00000
34/	60/	5	-0.45674	3.47164	-4.04884	10.92321	-7.54591	-88.68333
34/	50/	6	0.32849	2.77251	7.33449	0.37343	15.57947	-88.65529
34/	60/	7	23.52945	-18.34182	6.01543	-26.71542	673.47475	448.43104
34/	60/	8	9.74622	44.28108	2.49167	64.49673	278.96238	-1082.60829
34/	50/	9 (C)	0.19560	-0.00000	0.12806	0.00000	1.78829	-0.00000
34/	60/	10 (C)	0.54441	-0.00000	0.29842	0.00000	4.66966	-0.00000
34/	60/	11 (C)	-0.44432	0.10203	-0.35519	0.32103	-3.91781	-2.54762
34/	60/	12 (C)	-0.42124	0.08148	-0.02064	0.01098	-3.23816	-1.95900
34/	60/	13 (C)	0.02047	0.09299	0.00523	0.13544	0.58582	-2.27348
34/	60/	14 (C)	0.04941	-0.03852	0.01263	-0.05610	1.41430	0.94171
34/	60/	15 (C)	0.19560	-0.00000	0.12806	0.00000	1.78829	-0.00000
34/	60/	16 (C)	0.74001	-0.00000	0.42648	0.00000	6.45795	-0.00000
34/	60/	17 (C)	-0.24873	0.10203	-0.22714	0.32103	-2.12953	-2.54762

Bar/Node/Case			FX (kip)	FY (kip)	FZ (kip)	MX (kip-in)	MY (kip-in)	MZ (kip-in)
34/	60/	18 (C)	-0.22564	0.08148	0.10742	0.01098	-1.44987	-1.95900
34/	60/	19 (C)	0.21607	0.09299	0.13329	0.13544	2.37411	-2.27348
34/	60/	20 (C)	0.24501	-0.03852	0.14069	-0.05610	3.20258	0.94171
34/	60/	21 (C)	0.27066	0.07652	0.08548	0.24077	2.35217	-1.91072
34/	60/	22 (C)	0.28797	0.06111	0.33639	0.00823	2.86191	-1.48925
34/	60/	23 (C)	0.61465	0.04882	0.35462	0.07111	5.59809	-1.19356
34/	60/	24 (C)	0.62985	-0.02022	0.35851	-0.02945	6.03304	0.49440
34/	60/	25 (C)	-0.32696	0.10203	-0.27836	0.32103	-2.84434	-2.54762
34/	60/	26 (C)	-0.30388	0.08148	0.05620	0.01098	-2.16518	-1.95900
34/	60/	27 (C)	0.13169	0.06509	0.08050	0.09481	1.48305	1.59143
34/	60/	28 (C)	0.15195	-0.02696	0.08568	-0.03927	2.06298	0.65919
34/	60/	29 (C)	0.27384	-0.00000	0.17928	0.00000	2.50360	-0.00000
34/	60/	30 (C)	0.50692	-0.00000	0.30288	0.00000	4.48077	-0.00000
34/	60/	31 (C)	0.75031	0.08163	0.34699	0.25683	6.48315	-2.03810
34/	60/	32 (C)	0.76877	0.06519	0.61463	0.00878	7.02688	-1.56720
34/	60/	33 (C)	-0.20339	0.16325	-0.26543	0.51365	-1.78772	-4.07620
34/	60/	34 (C)	-0.16707	0.13037	0.26986	0.01756	-0.70028	-3.13440
34/	60/	35 (C)	0.36407	0.09299	0.21859	0.13544	3.66570	-2.27348
34/	60/	36 (C)	0.39301	-0.03852	0.22599	-0.05610	4.49417	0.94171
34/	60/	37 (C)	-0.53487	0.16325	-0.45306	0.51365	-4.65994	-4.07620
34/	60/	38 (C)	-0.49795	0.13037	0.08223	0.01756	-3.57159	-3.13440
34/	60/	39 (C)	0.19651	0.09299	0.12049	0.13544	2.19528	-2.27348
34/	60/	40 (C)	0.22545	-0.03852	0.12788	-0.05610	3.02375	0.94171
35/	35/	1	0.13633	-0.00000	0.08330	0.00000	-0.91125	-0.00000
35/	35/	2	-27.22027	0.00000	-14.92101	-0.00000	124.62111	0.00000
35/	35/	3	-27.22027	0.00000	-14.92101	-0.00000	124.62111	0.00000
35/	35/	4	-27.22027	0.00000	-14.92101	-0.00000	124.62111	0.00000
35/	35/	5	-4.10840	4.95917	-9.70642	6.82343	100.29171	-2.10134
35/	35/	6	0.32849	-2.77251	7.33449	-0.37343	-150.44830	0.11500
35/	35/	7	23.52945	18.34182	6.01543	26.71542	529.10451	-8.22728
35/	35/	8	9.74622	44.28108	2.49167	64.49673	-219.16228	-19.86240
35/	35/	9 (C)	0.21799	-0.00000	0.12806	0.00000	-1.28511	-0.00000
35/	35/	10 (C)	0.54441	-0.00000	0.29842	0.00000	-2.49242	-0.00000
35/	35/	11 (C)	-0.55164	0.14575	-0.52147	0.20054	4.92033	-0.06176
35/	35/	12 (C)	-0.42124	-0.08148	-0.02064	-0.01098	-2.74282	0.00338
35/	35/	13 (C)	-0.02047	0.09299	-0.00523	0.13544	-0.46024	0.04171

Bar/Node/Case	FX (kip)	FY (kip)	FZ (kip)	MX (kip-in)	MY (kip-in)	MZ (kip-in)
35/ 35/ 14 (C)	0.04941	0.03852	0.01263	0.05610	1.11112	-0.01728
35/ 35/ 15 (C)	0.21799	-0.00000	0.12806	0.00000	-1.28511	-0.00000
35/ 35/ 16 (C)	0.76240	-0.00000	0.42648	0.00000	-3.77754	-0.00000
35/ 35/ 17 (C)	-0.33365	0.14575	-0.39341	0.20054	3.53521	0.06176
35/ 35/ 18 (C)	-0.20325	-0.08148	0.10742	-0.01098	-4.02794	0.00338
35/ 35/ 19 (C)	0.19752	0.09299	0.12283	0.13544	-1.74535	-0.04171
35/ 35/ 20 (C)	0.26140	0.03852	0.14069	0.05610	-0.17398	-0.01728
35/ 35/ 21 (C)	0.21256	0.10931	-0.03923	0.15041	0.53581	-0.04632
35/ 35/ 22 (C)	0.31036	-0.06111	0.33639	-0.00823	-5.21155	0.00253
35/ 35/ 23 (C)	0.61555	0.04882	0.34913	0.07111	3.39606	-0.02190
35/ 35/ 24 (C)	0.65224	0.02022	0.35851	0.02945	-2.57109	-0.00907
35/ 35/ 25 (C)	-0.42085	0.14575	-0.44464	0.20054	4.14928	-0.06176
35/ 35/ 26 (C)	-0.29045	-0.08148	0.05620	-0.01098	-3.51389	0.00338
35/ 35/ 27 (C)	0.11647	0.06503	0.07317	0.09481	-1.09324	-0.02920
35/ 35/ 28 (C)	0.16538	0.02698	0.08568	0.03927	0.00672	-0.01209
35/ 35/ 29 (C)	0.30519	-0.00000	0.17928	0.00000	-1.79916	-0.00000
35/ 35/ 30 (C)	0.53379	-0.00000	0.30288	0.00000	-2.78835	-0.00000
35/ 35/ 31 (C)	0.99132	0.11663	0.21397	0.16043	-1.59375	-0.04941
35/ 35/ 32 (C)	0.79564	-0.06519	0.61463	-0.00878	-7.72427	0.00270
35/ 35/ 33 (C)	-0.34884	0.23320	-0.53147	0.32086	5.08417	-0.09881
35/ 35/ 34 (C)	-0.14020	-0.13037	0.26986	-0.01756	-7.17687	0.00541
35/ 35/ 35 (C)	0.35000	0.09299	0.20812	0.13544	-2.50086	-0.04171
35/ 35/ 36 (C)	0.41988	0.03852	0.22599	0.05610	-0.92956	-0.01728
35/ 35/ 37 (C)	-0.08644	0.23320	-0.71910	0.32086	6.71993	-0.09881
35/ 35/ 38 (C)	-0.47786	-0.13037	0.08223	-0.01756	-5.54512	0.00541
35/ 35/ 39 (C)	0.17572	0.09299	0.11002	0.13544	-1.61684	-0.04171
35/ 35/ 40 (C)	0.24560	0.03852	0.12788	0.05610	-0.04548	-0.01728
35/ 51/ 1	0.11394	-0.00000	0.08330	0.00000	1.08784	-0.00000
35/ 51/ 2	-27.22027	0.00000	14.92101	-0.00000	-233.48305	0.00000
35/ 51/ 3	-27.22027	0.00000	-14.92101	-0.00000	-233.48305	0.00000
35/ 51/ 4	-27.22027	0.00000	-14.92101	-0.00000	-233.48305	0.00000
35/ 51/ 5	-4.10840	-4.95917	-9.70542	8.82343	-132.56236	-121.12139
35/ 51/ 6	0.32840	-2.77251	7.33446	-0.37343	15.57947	66.65539
35/ 51/ 7	23.52945	18.34182	6.01543	26.71542	673.47475	-448.43104
35/ 51/ 8	9.74622	44.28108	2.49167	64.49673	-278.96238	-1082.60829
35/ 51/ 9 (C)	0.19560	-0.00000	0.12806	0.00000	1.78829	-0.00000

Bar/Node/Case	FX (kip)	FY (kip)	FZ (kip)	MX (kip-in)	MY (kip-in)	MZ (kip-in)
35/ 51/ 10 (C)	0.54441	-0.00000	0.29842	0.00000	4.66966	-0.00000
35/ 51/ 11 (C)	-0.55184	0.14575	-0.52147	0.20054	-7.59498	-3.55976
35/ 51/ 12 (C)	-0.42124	-0.08148	-0.02064	-0.01098	-3.23816	1.95900
35/ 51/ 13 (C)	-0.02047	0.09299	-0.00523	0.13544	-0.58582	-2.27348
35/ 51/ 14 (C)	0.04941	0.03852	0.01263	0.05610	1.41430	-0.94171
35/ 51/ 15 (C)	0.19560	-0.00000	0.12806	0.00000	1.78829	-0.00000
35/ 51/ 16 (C)	0.74001	-0.00000	0.42648	0.00000	6.45795	-0.00000
35/ 51/ 17 (C)	-0.35604	0.14575	-0.39341	0.20054	-5.80670	-3.55976
35/ 51/ 18 (C)	-0.22564	-0.08148	0.10742	-0.01098	-1.44987	1.95900
35/ 51/ 19 (C)	0.17513	0.09299	0.12283	0.13544	1.20247	-2.27348
35/ 51/ 20 (C)	0.24501	0.03852	0.14069	0.05610	3.20256	-0.94171
35/ 51/ 21 (C)	0.19017	0.10931	-0.03923	0.15041	-0.40571	-2.69982
35/ 51/ 22 (C)	0.28797	-0.06111	0.33639	-0.00823	2.86191	1.46925
35/ 51/ 23 (C)	0.59316	0.04882	0.34913	0.07111	4.98298	-1.19358
35/ 51/ 24 (C)	0.62985	0.02022	0.35851	0.02945	6.03304	-0.49440
35/ 51/ 25 (C)	-0.43428	0.14575	-0.44464	0.20054	-6.52201	-3.55976
35/ 51/ 26 (C)	-0.30388	-0.08148	0.05620	-0.01098	-2.16516	1.95900
35/ 51/ 27 (C)	0.10303	0.06503	0.07317	0.09481	0.86290	-1.59143
35/ 51/ 28 (C)	0.15195	0.02698	0.08568	0.03927	2.06298	-0.65919
35/ 51/ 29 (C)	0.27384	-0.00000	0.17928	0.00000	2.50360	-0.00000
35/ 51/ 30 (C)	0.50692	-0.00000	0.30288	0.00000	4.48077	-0.00000
35/ 51/ 31 (C)	0.66445	0.11660	0.21397	0.16043	3.54141	-2.84781
35/ 51/ 32 (C)	0.76877	-0.06519	0.61463	-0.00878	7.02586	1.56720
35/ 51/ 33 (C)	-0.37571	0.23320	-0.53147	0.32086	-7.67120	-5.69561
35/ 51/ 34 (C)	-0.16701	-0.13037	0.26986	-0.01756	-6.70028	3.13440
35/ 51/ 35 (C)	0.32313	0.09299	0.20812	0.13544	2.49405	-2.27348
35/ 51/ 36 (C)	0.39301	0.03852	0.22599	0.05610	4.49417	-0.94171
35/ 51/ 37 (C)	-0.70659	0.23320	-0.71910	0.32086	-10.54252	-5.69561
35/ 51/ 38 (C)	-0.49795	-0.13037	0.08223	-0.01756	-3.57159	3.13440
35/ 51/ 39 (C)	0.15551	0.09299	0.11002	0.13544	1.02364	-2.27348
35/ 51/ 40 (C)	0.22545	0.03852	0.12788	0.05610	3.02375	-0.94171
35/ 35/ 1	0.13633	-0.00000	0.08330	0.00000	-0.91125	-0.00000
35/ 35/ 2	-27.22027	0.00000	-14.92101	-0.00000	124.62111	0.00000
35/ 35/ 3	-27.22027	0.00000	14.92101	-0.00000	124.62111	0.00000
35/ 35/ 4	-27.22027	0.00000	-14.92101	-0.00000	124.62111	0.00000
35/ 35/ 5	0.34150	2.76940	7.35646	0.39125	-160.81257	-0.12048

Bar/Node/Case	FX (kip)	FY (kip)	FZ (kip)	MX (kip-in)	MY (kip-in)	MZ (kip-in)
35/ 35/ 6	-4.11379	-4.96669	-9.71552	-8.78041	100.44259	2.08806
35/ 35/ 7	9.74622	44.28108	2.49167	64.49673	219.16226	-19.86206
35/ 35/ 8	-23.52945	18.34182	-6.01543	26.71542	-529.10451	-9.22726
35/ 35/ 9 (C)	0.21799	-0.00000	0.12806	0.00000	-1.28511	-0.00000
35/ 35/ 10 (C)	0.54441	-0.00000	0.29842	0.00000	-2.49242	-0.00000
35/ 35/ 11 (C)	-0.42086	0.08139	-0.01999	0.01150	-2.75353	-0.00354
35/ 35/ 12 (C)	-0.55180	-0.14597	-0.52174	-0.19928	4.92476	0.06137
35/ 35/ 13 (C)	-0.04941	0.03852	-0.01263	0.05610	-1.11112	-0.01728
35/ 35/ 14 (C)	0.02047	0.09299	0.00523	0.13544	0.46024	0.04171
35/ 35/ 15 (C)	0.21799	-0.00000	0.12806	0.00000	-1.28511	-0.00000
35/ 35/ 16 (C)	0.76240	-0.00000	0.42648	0.00000	-3.77754	-0.00000
35/ 35/ 17 (C)	-0.20287	0.08139	0.10807	0.01150	-4.03854	-0.00354
35/ 35/ 18 (C)	-0.33381	-0.14597	-0.39368	-0.19928	3.53965	0.06137
35/ 35/ 19 (C)	0.16856	0.03852	0.11543	0.05610	-2.39623	-0.01728
35/ 35/ 20 (C)	0.23846	0.09299	0.13329	0.13544	-0.92487	-0.04171
35/ 35/ 21 (C)	0.31065	0.06104	0.33688	0.00862	-5.21958	-0.00286
35/ 35/ 22 (C)	0.21244	-0.10948	-0.03943	-0.14946	0.53914	0.04603
35/ 35/ 23 (C)	0.60035	0.02022	0.34524	0.02945	-3.73777	-0.00907
35/ 35/ 24 (C)	0.63704	0.04882	0.35462	0.07111	-2.91280	-0.02190
35/ 35/ 25 (C)	0.29007	0.08139	0.05684	0.01150	-3.52460	-0.00354
35/ 35/ 26 (C)	-0.42101	-0.14597	-0.44490	-0.19928	4.15369	0.06137
35/ 35/ 27 (C)	0.09621	0.02698	0.06799	0.03927	-1.54869	-0.01209
35/ 35/ 28 (C)	0.14512	0.06503	0.08050	0.09481	-0.44890	-0.02920
35/ 35/ 29 (C)	0.30519	-0.00000	0.17928	0.00000	-1.79916	-0.00000
35/ 35/ 30 (C)	0.53379	-0.00000	0.30288	0.00000	-2.78835	-0.00000
35/ 35/ 31 (C)	0.79595	0.06511	0.61515	0.00920	-7.73284	-0.00283
35/ 35/ 32 (C)	0.69120	-0.11678	0.21375	-0.15942	-1.59020	0.04910
35/ 35/ 33 (C)	-0.13959	0.13023	0.27089	0.01840	-7.19399	-0.00567
35/ 35/ 34 (C)	-0.34909	-0.23355	-0.53190	-0.31884	5.09127	0.09819
35/ 35/ 35 (C)	0.32108	0.03852	0.20072	0.05610	-3.15174	-0.01728
35/ 35/ 36 (C)	0.39094	0.09299	0.21859	0.13544	-1.58038	-0.04171
35/ 35/ 37 (C)	-0.47718	0.13023	0.08326	0.01840	-5.56225	-0.00567
35/ 35/ 38 (C)	-0.88669	-0.23355	-0.71953	-0.31884	6.72301	0.09819
35/ 35/ 39 (C)	0.14678	0.03852	0.10262	0.05610	-2.26772	-0.01728
35/ 35/ 40 (C)	0.21666	0.09299	0.12049	0.13544	-0.69036	-0.04171
35/ 52/ 1	0.11394	-0.00000	0.08330	0.00000	1.08784	-0.00000

Bar/Node/Case	FX (kip)	FY (kip)	FZ (kip)	MX (kip-in)	MY (kip-in)	MZ (kip-in)
35/ 52/ 2	-27.22027	0.00000	-14.92101	-0.00000	-233.48304	0.00000
35/ 52/ 3	27.22027	0.00000	14.92101	-0.00000	233.48304	0.00000
35/ 52/ 4	-27.22027	0.00000	-14.92101	-0.00000	-233.48304	0.00000
35/ 52/ 5	0.34150	2.76940	7.35646	0.39125	15.74255	-66.56598
35/ 52/ 6	-4.11379	-4.96669	-9.71552	-6.78041	-132.72991	121.28874
35/ 52/ 7	9.74622	44.28108	2.49167	64.49673	278.96238	-1082.60829
35/ 52/ 8	-23.52945	18.34182	-6.01543	26.71542	-673.47475	-448.43104
35/ 52/ 9 (C)	0.19560	-0.00000	0.12806	0.00000	1.78829	-0.00000
35/ 52/ 10 (C)	0.54441	-0.00000	0.29842	0.00000	4.66966	-0.00000
35/ 52/ 11 (C)	-0.42086	0.08139	-0.01999	0.01150	-3.23336	-1.95696
35/ 52/ 12 (C)	-0.55180	-0.14597	-0.52174	-0.19928	-7.59697	3.56468
35/ 52/ 13 (C)	-0.04941	0.03852	-0.01263	0.05610	-1.41430	-0.94171
35/ 52/ 14 (C)	0.02047	0.09299	0.00523	0.13544	0.58582	-2.27348
35/ 52/ 15 (C)	0.19560	-0.00000	0.12806	0.00000	1.78829	-0.00000
35/ 52/ 16 (C)	0.74001	-0.00000	0.42648	0.00000	6.45795	-0.00000
35/ 52/ 17 (C)	-0.22526	0.08139	0.10807	0.01150	-1.44508	-1.95696
35/ 52/ 18 (C)	-0.35620	-0.14597	-0.39368	-0.19928	-5.80868	3.56468
35/ 52/ 19 (C)	0.14819	0.03852	0.11543	0.05610	0.37399	-0.94171
35/ 52/ 20 (C)	0.21807	0.09299	0.13329	0.13544	2.37411	-2.27348
35/ 52/ 21 (C)	0.28826	0.06104	0.33688	0.00862	2.86551	-1.46772
35/ 52/ 22 (C)	0.19005	-0.10948	-0.03943	-0.14946	-0.40719	2.67351
35/ 52/ 23 (C)	0.57798	0.02022	0.34524	0.02945	4.54803	-0.49440
35/ 52/ 24 (C)	0.61465	0.04882	0.35462	0.07111	5.99809	-1.19358
35/ 52/ 25 (C)	-0.30350	0.08139	0.05684	0.01150	-2.16039	-1.95696
35/ 52/ 26 (C)	-0.43444	-0.14597	-0.44490	-0.19928	-5.52400	3.56468
35/ 52/ 27 (C)	0.08277	0.02698	0.06799	0.03927	0.08298	-0.65919
35/ 52/ 28 (C)	0.13169	0.06509	0.08050	0.09481	1.48305	-1.59143
35/ 52/ 29 (C)	0.27384	-0.00000	0.17928	0.00000	2.50360	-0.00000
35/ 52/ 30 (C)	0.50692	-0.00000	0.30288	0.00000	4.48077	-0.00000
35/ 52/ 31 (C)	0.76908	0.06511	0.61515	0.00920	7.03071	-1.56557
35/ 52/ 32 (C)	0.66433	-0.11678	0.21375	-0.15942	3.53983	2.85174
35/ 52/ 33 (C)	-0.16645	0.13023	0.27089	0.01840	-0.69261	-3.13114
35/ 52/ 34 (C)	-0.37598	-0.23355	-0.53190	-0.31884	-7.67438	5.70348
35/ 52/ 35 (C)	0.29419	0.03852	0.20072	0.05610	1.66558	-0.94171
35/ 52/ 36 (C)	0.36407	0.09299	0.21859	0.13544	3.86570	-2.27348
35/ 52/ 37 (C)	-0.49734	0.13023	0.08326	0.01840	-3.56392	-3.13114

Bar/Node/Case			FX (kip)	FY (kip)	FZ (kip)	MX (kip-in)	MY (kip-in)	MZ (kip-in)
36/	62/	39 (C)	-0.70684	-0.23355	-0.71953	-0.31884	-10.54569	5.70348
36/	62/	39 (C)	0.12663	0.03852	0.10262	0.05610	0.19516	-0.94171
36/	62/	40 (C)	0.19651	0.09299	0.12049	0.13544	2.19528	-2.27348
37/	37/	1	0.13633	-0.00000	0.08330	0.00000	-0.91125	-0.00000
37/	37/	2	-27.22027	0.00000	-14.92101	-0.00000	124.62111	0.00000
37/	37/	3	-27.22027	0.00000	-14.92101	-0.00000	124.62111	0.00000
37/	37/	4	-27.22027	0.00000	-14.92101	-0.00000	124.62111	0.00000
37/	37/	5	0.34150	-2.76940	7.35646	-0.39125	-160.81257	0.12049
37/	37/	6	-0.45135	-3.47917	-4.03974	-10.88019	89.47537	3.35066
37/	37/	7	-9.74822	44.28108	-2.49167	64.49673	-219.16226	-19.86240
37/	37/	8	-23.52945	-18.34182	-6.01543	-26.71542	-529.10451	8.22728
37/	37/	9 (C)	0.21799	-0.00000	0.12806	0.00000	-1.28511	-0.00000
37/	37/	10 (C)	0.54441	-0.00000	0.29842	0.00000	-2.49242	-0.00000
37/	37/	11 (C)	-0.42086	-0.08139	-0.01999	-0.01150	-2.75353	0.00354
37/	37/	12 (C)	-0.44416	-0.10225	-0.35493	-0.31977	4.60243	0.09848
37/	37/	13 (C)	-0.04941	-0.03852	-0.01263	-0.05610	-1.11112	0.01728
37/	37/	14 (C)	-0.02047	0.09299	-0.00523	0.13544	-0.46024	-0.04171
37/	37/	15 (C)	0.21799	-0.00000	0.12806	0.00000	-1.28511	-0.00000
37/	37/	16 (C)	0.76240	-0.00000	0.42648	0.00000	-3.77754	-0.00000
37/	37/	17 (C)	-0.20287	-0.08139	0.10807	-0.01150	-4.03864	0.00354
37/	37/	18 (C)	-0.22617	-0.10225	-0.22687	-0.31977	3.31732	0.09848
37/	37/	19 (C)	0.16858	-0.03852	0.11543	-0.05610	-2.39623	0.01728
37/	37/	20 (C)	0.19752	0.09299	0.12283	0.13544	-1.74535	-0.04171
37/	37/	21 (C)	0.31065	-0.06104	0.33688	-0.00862	-5.21958	0.00268
37/	37/	22 (C)	0.29317	-0.07669	0.08568	-0.23983	0.29739	0.07388
37/	37/	23 (C)	0.60035	-0.02022	0.34524	-0.02945	-3.73777	0.00907
37/	37/	24 (C)	0.61555	0.04882	0.34913	0.07111	-3.39606	-0.02190
37/	37/	25 (C)	-0.29007	-0.08139	0.05684	-0.01150	-3.52460	0.00354
37/	37/	26 (C)	-0.31337	-0.10225	-0.27809	-0.31977	3.83137	0.09848
37/	37/	27 (C)	0.09621	-0.02696	0.05799	-0.03927	-1.54885	0.01209
37/	37/	28 (C)	0.11647	0.06509	0.07317	0.09481	-1.09324	-0.02920
37/	37/	29 (C)	0.30519	-0.00000	0.17928	0.00000	-1.79916	-0.00000
37/	37/	30 (C)	0.53379	-0.00000	0.30288	0.00000	-2.78835	-0.00000
37/	37/	31 (C)	0.76908	-0.06511	0.61515	-0.00920	7.03071	1.56557
37/	37/	32 (C)	0.75044	-0.08180	0.34720	-0.25582	6.48474	2.04203
37/	37/	33 (C)	-0.16645	-0.13023	0.27089	-0.01840	-0.69361	3.13114
37/	37/	34 (C)	-0.20374	-0.16360	-0.26500	-0.51163	-1.78455	4.08407
37/	53/	35 (C)	0.29419	-0.03852	0.20072	-0.05610	1.66558	0.94171
37/	53/	36 (C)	0.32313	0.09299	0.20812	0.13544	2.49405	-2.27348
37/	53/	37 (C)	-0.49734	-0.13023	0.08326	-0.01840	-3.56392	3.13114
37/	53/	38 (C)	-0.53462	-0.16360	-0.45263	-0.51163	-4.65586	4.08407
37/	53/	39 (C)	0.12663	-0.03852	0.10262	-0.05610	0.19516	0.94171
37/	53/	40 (C)	0.15557	0.09299	0.11002	0.13544	1.02364	-2.27348
38/	38/	1	0.13633	-0.00000	0.08330	0.00000	-0.91125	-0.00000
38/	38/	2	-27.22027	0.00000	-14.92101	-0.00000	124.62111	0.00000
38/	38/	3	-27.22027	0.00000	-14.92101	-0.00000	124.62111	0.00000
38/	38/	4	-27.22027	0.00000	-14.92101	-0.00000	124.62111	0.00000
38/	38/	5	-4.10840	-4.95917	-9.70642	-6.62343	100.29171	2.10134
38/	38/	6	-4.23665	-1.28499	5.68484	-4.47321	-16.60064	1.37757
38/	38/	7	-23.52945	18.34182	-6.01543	26.71542	529.10451	-8.22728
38/	38/	8	-9.74822	-44.28108	-2.49167	-64.49673	-219.16226	19.86240
38/	38/	9 (C)	0.21799	0.00000	0.12806	0.00000	-1.28511	-0.00000
38/	38/	10 (C)	0.54441	0.00000	0.29842	0.00000	-2.49242	0.00000
38/	38/	11 (C)	-0.55164	-0.14575	-0.52147	-0.20054	4.92083	0.06176
38/	38/	12 (C)	-0.30638	-0.03777	-0.06912	0.13147	1.48221	0.04049
38/	38/	13 (C)	-0.02047	-0.09299	-0.00523	-0.13544	-0.46024	0.04171
38/	38/	14 (C)	-0.04941	0.03852	-0.01263	0.05610	-1.11112	-0.01728
38/	38/	15 (C)	0.21799	-0.00000	0.12806	0.00000	-1.28511	-0.00000
38/	38/	16 (C)	0.76240	-0.00000	0.42648	0.00000	-3.77754	-0.00000
38/	38/	17 (C)	-0.33365	-0.14575	-0.39341	-0.20054	3.63521	0.06176
38/	38/	18 (C)	-0.08839	-0.03777	0.05894	-0.13147	0.19710	0.04049
38/	38/	19 (C)	0.19752	-0.09299	0.12283	-0.13544	-1.74535	0.04171
38/	38/	20 (C)	0.16858	0.03852	0.11543	0.05610	-2.39623	-0.01728
38/	38/	21 (C)	0.21258	-0.10931	-0.03923	-0.15041	0.53581	0.04632
38/	38/	22 (C)	0.39651	-0.02832	0.30003	-0.09860	-2.04277	0.03037
38/	38/	23 (C)	0.61555	-0.04882	0.34913	-0.07111	-3.39606	0.02190
38/	38/	24 (C)	0.60035	0.02022	0.34524	0.02945	-3.73777	-0.00907
38/	38/	25 (C)	-0.42085	-0.14575	-0.44464	-0.20054	4.14926	0.06176

Bar/Node/Case			FX (kip)	FY (kip)	FZ (kip)	MX (kip-in)	MY (kip-in)	MZ (kip-in)
37/	37/	34 (C)	-0.17687	-0.16360	-0.26500	-0.51163	4.57555	0.15756
37/	37/	35 (C)	0.32106	-0.03852	0.20072	-0.05610	-3.15174	0.01728
37/	37/	36 (C)	0.35000	0.09299	0.20812	0.13544	-2.50086	-0.04171
37/	37/	37 (C)	-0.47718	-0.13023	0.08326	-0.01840	-5.56225	0.00567
37/	37/	38 (C)	-0.51447	-0.16360	-0.45263	-0.51163	6.20729	0.15756
37/	37/	39 (C)	0.14878	-0.03852	0.10262	-0.05610	-2.26772	0.01728
37/	37/	40 (C)	0.17572	0.09299	0.11002	0.13544	-1.61684	-0.04171
37/	53/	1	0.11394	-0.00000	0.08330	0.00000	1.08784	-0.00000
37/	53/	2	-27.22027	0.00000	-14.92101	-0.00000	-233.48305	0.00000
37/	53/	3	-27.22027	0.00000	-14.92101	-0.00000	-233.48305	0.00000
37/	53/	4	-27.22027	0.00000	-14.92101	-0.00000	-233.48305	0.00000
37/	53/	5	0.34150	-2.76940	7.35646	-0.39125	15.74255	66.58598
37/	53/	6	-0.45135	-3.47917	-4.03974	-10.88019	-7.47835	86.85071
37/	53/	7	-9.74822	44.28108	-2.49167	64.49673	-278.96238	-1082.60829
37/	53/	8	-23.52945	-18.34182	-6.01543	-26.71542	-673.47475	448.43104
37/	53/	9 (C)	0.19560	-0.00000	0.12806	0.00000	1.78829	-0.00000
37/	53/	10 (C)	0.54441	-0.00000	0.29842	0.00000	4.66966	-0.00000
37/	53/	11 (C)	-0.42086	-0.08139	-0.01999	-0.01150	-3.23336	1.95696
37/	53/	12 (C)	-0.44416	-0.10225	-0.35493	-0.31977	-3.91583	2.55254
37/	53/	13 (C)	-0.04941	-0.03852	-0.01263	-0.05610	-1.41430	0.94171
37/	53/	14 (C)	-0.02047	0.09299	-0.00523	0.13544	-0.58582	-2.27348
37/	53/	15 (C)	0.19560	-0.00000	0.12806	0.00000	1.78829	-0.00000
37/	53/	16 (C)	0.74001	-0.00000	0.42648	0.00000	6.45795	-0.00000
37/	53/	17 (C)	-0.22526	-0.08139	0.10807	-0.01150	-1.44508	1.95696
37/	53/	18 (C)	-0.24856	-0.10225	-0.22687	-0.31977	-2.12754	2.55254
37/	53/	19 (C)	0.14619	-0.03852	0.11543	-0.05610	0.37399	0.94171
37/	53/	20 (C)	0.17513	0.09299	0.12283	0.13544	1.20247	-2.27348
37/	53/	21 (C)	0.28826	-0.06104	0.33688	-0.00862	2.86551	1.46772
37/	53/	22 (C)	0.27078	-0.07669	0.08568	-0.23983	2.35366	1.91441
37/	53/	23 (C)	0.57796	-0.02022	0.34524	-0.02945	4.54803	0.49440
37/	53/	24 (C)	0.59316	0.04882	0.34913	0.07111	4.98298	-1.19358
37/	53/	25 (C)	-0.30350	-0.08139	0.05684	-0.01150	-2.16039	1.95696
37/	53/	26 (C)	-0.32680	-0.10225	-0.27809	-0.31977	-2.84285	2.55254
37/	53/	27 (C)	0.08277	-0.02696	0.05799	-0.03927	0.08296	0.65918
37/	53/	28 (C)	0.10303	0.06509	0.07317	0.09481	0.66290	-1.59143
37/	53/	29 (C)	0.27384	-0.00000	0.17928	0.00000	2.50368	-0.00000

Bar/Node/Case			FX (kip)	FY (kip)	FZ (kip)	MX (kip-in)	MY (kip-in)	MZ (kip-in)
38/	38/	26 (C)	-0.17559	-0.03777	0.00771	-0.13147	0.71115	0.04049
38/	38/	27 (C)	0.11647	-0.06509	0.07317	-0.09481	-1.09324	0.02920
38/	38/	28 (C)	0.09621	0.02696	0.06799	0.03927	-1.54885	-0.01209
38/	38/	29 (C)	0.30519	-0.00000	0.17928	0.00000	-1.79916	-0.00000
38/	38/	30 (C)	0.53379	-0.00000	0.30288	0.00000	-2.78835	-0.00000
38/	38/	31 (C)	0.69132	-0.11660	0.21397	-0.16043	-1.59375	0.04941
38/	38/	32 (C)	0.68753	-0.03021	0.57584	-0.10517	-4.34424	0.03239
38/	38/	33 (C)	-0.34884	-0.23320	-0.53147	-0.32086	5.08417	0.09881
38/	38/	34 (C)	0.04358	-0.06043	0.19228	-0.21035	-0.41681	0.06476
38/	38/	35 (C)	0.35000	-0.09299	0.20812	-0.13544	-2.50086	0.04171
38/	38/	36 (C)	0.32106	0.03852	0.20072	0.05610	-3.15174	-0.01728
38/	38/	37 (C)	-0.66644	-0.23320	-0.71910	-0.32086	6.71592	0.09881
38/	38/	38 (C)	-0.29402	-0.06043	0.00456	-0.21035	1.21494	0.06476
38/	38/	39 (C)	0.17572	-0.09299	0.11002	-0.13544	-1.61684	0.04171
38/	38/	40 (C)	0.14678	0.03852	0.10262	0.05610	-2.26772	-0.01728
38/	54/	1	0.11394	-0.00000	0.08330	0.00000	1.08784	-0.00000
38/	54/	2	-27.22027	0.00000	-14.92101	-0.00000	-233.48304	0.00000
38/	54/	3	-27.22027	0.00000	-14.92101	-0.00000	-233.48304	0.00000
38/	54/	4	-27.22027	0.00000	-14.92101	-0.00000	-233.48304	0.00000
38/	54/	5	-4.10840	-4.95917	-9.70642	-6.62343	132.66236	121.12139
38/	54/	6	-4.23665	-1.28499	5.68484	-4.47321	-119.74561	32.21727
38/	54/	7	-23.52945	18.34182	-6.01543	26.71542	-673.47475	-448.43104
38/	54/	8	-9.74822	-44.28108	-2.49167	-64.49673	-278.96238	1082.60829
38/	54/	9 (C)	0.19560	-0.00000	0.12806	0.00000	1.78829	-0.00000
38/	54/	10 (C)	0.54441	-0.00000	0.29842	0.00000	4.66966	-0.00000
38/	54/	11 (C)	-0.55164	-0.14575	-0.52147	-0.20054	-7.59498	3.55976
38/	54/	12 (C)	-0.30638	-0.03777	-0.06912	-0.13147	-0.17671	0.94587
38/	54/	13 (C)	-0.02047	-0.09299	-0.00523	-0.13544	-0.58582	2.27348
38/	54/	14 (C)	-0.04941	0.03852	-0.01263	0.05610	-1.41430	-0.94171
38/	54/	15 (C)	0.19560	-0.00000	0.12806	0.00000	1.78829	-0.00000
38/	54/	16 (C)	0.74001	-0.00000	0.42648	0.00000	6.45795	-0.00000
38/	54/	17 (C)	-0.35604	-0.14575	-0.39341	-0.20054	-5.80670	3.55976
38/	54/	18 (C)	-0.11078	-0.03777	0.05894	-0.13147	1.61157	0.94587
38/	54/	19 (C)	0.17513	-0.09299	0.12283	-0.13544	1.20247	2.27348
38/	54/	20 (C)	0.14619	0.03852	0.11543	0.05610	0.37399	-0.94171
38/	54/	21 (C)	0.19017	-0.10931	-0.03923	-0.15041	-0.40571	2.86982

Bar/Node/Case	FX (kip)	FY (kip)	FZ (kip)	MX (kip-in)	MY (kip-in)	MZ (kip-in)
39/ 54/ 22 (C)	0.37412	-0.02832	0.30003	-0.09860	5.15800	0.71015
39/ 54/ 23 (C)	0.59316	-0.04882	0.34913	-0.07111	4.98293	1.19356
39/ 54/ 24 (C)	0.57798	0.02022	0.34524	0.02945	4.54803	-0.49440
39/ 54/ 25 (C)	-0.43428	-0.14575	-0.44464	-0.20054	-6.52201	3.55976
39/ 54/ 26 (C)	-0.18902	-0.03777	0.00771	-0.13147	0.89628	0.94687
39/ 54/ 27 (C)	0.10303	-0.06509	0.07317	-0.09481	0.68290	1.59143
39/ 54/ 28 (C)	0.08277	0.02698	0.06799	0.03927	0.08290	-0.65919
39/ 54/ 29 (C)	0.27384	-0.00000	0.17928	0.00000	2.50360	-0.00000
39/ 54/ 30 (C)	0.50592	-0.00000	0.30288	0.00000	4.48077	-0.00000
39/ 54/ 31 (C)	0.66445	-0.11662	0.21397	-0.16043	3.54141	2.84791
39/ 54/ 32 (C)	0.86066	-0.03021	0.57584	-0.10517	9.47603	0.75749
39/ 54/ 33 (C)	-0.37571	-0.23320	-0.53147	-0.32086	-7.67120	5.69551
39/ 54/ 34 (C)	0.01671	-0.06043	0.19228	-0.21035	4.19803	1.51498
39/ 54/ 35 (C)	0.32313	-0.09299	0.20812	-0.13544	2.49405	2.27348
39/ 54/ 36 (C)	0.29419	0.03852	0.20072	0.05610	1.65558	-0.94171
39/ 54/ 37 (C)	-0.70659	-0.23320	-0.71910	-0.32086	-10.54252	5.69551
39/ 54/ 38 (C)	-0.31417	-0.06043	0.00466	-0.21035	1.32672	1.51498
39/ 54/ 39 (C)	0.15557	-0.09299	0.11002	-0.13544	1.02364	2.27348
39/ 54/ 40 (C)	0.12663	0.03852	0.10262	0.05610	0.19516	-0.94171
39/ 39/ 1	0.13633	-0.00000	0.08330	0.00000	-0.91125	0.00000
39/ 39/ 2	-27.22027	0.00000	-14.92101	-0.00000	124.62111	0.00000
39/ 39/ 3	-27.22027	0.00000	-14.92101	-0.00000	124.62111	0.00000
39/ 39/ 4	-27.22027	0.00000	-14.92101	-0.00000	124.62111	0.00000
39/ 39/ 5	-0.45674	-3.47164	-4.04884	-10.92321	89.62626	3.36391
39/ 39/ 6	4.23665	1.28499	5.66484	-4.47321	-16.69064	-1.37757
39/ 39/ 7	-23.52945	-18.34182	-6.01543	-26.71542	-529.10451	8.22728
39/ 39/ 8	9.74622	-44.28108	2.49167	-64.49673	219.16226	19.66240
39/ 39/ 9 (C)	0.21799	-0.00000	0.12806	0.00000	-1.28511	-0.00000
39/ 39/ 10 (C)	0.54441	-0.00000	0.29842	0.00000	-2.49242	-0.00000
39/ 39/ 11 (C)	-0.44432	-0.10203	-0.35519	-0.32103	4.60687	0.09837
39/ 39/ 12 (C)	-0.30638	0.03777	-0.06912	0.13147	1.46221	-0.04049
39/ 39/ 13 (C)	0.02047	-0.09299	0.00523	-0.13544	0.46024	0.04171
39/ 39/ 14 (C)	-0.04941	-0.03852	-0.01263	-0.05610	-1.11112	0.01728
39/ 39/ 15 (C)	0.21799	-0.00000	0.12806	0.00000	-1.28511	-0.00000
39/ 39/ 16 (C)	0.76240	-0.00000	0.42648	0.00000	-3.77754	-0.00000
39/ 39/ 17 (C)	0.22633	0.10203	-0.22714	-0.32103	3.32175	0.09837

Bar/Node/Case	FX (kip)	FY (kip)	FZ (kip)	MX (kip-in)	MY (kip-in)	MZ (kip-in)
39/ 39/ 18 (C)	-0.08839	0.02777	0.05894	0.13147	0.19710	-0.04049
39/ 39/ 19 (C)	0.23846	-0.06299	0.13329	-0.13544	-0.82487	0.04171
39/ 39/ 20 (C)	0.16858	-0.03852	0.11543	-0.05610	-2.39623	0.01728
39/ 39/ 21 (C)	0.29305	-0.07652	0.08548	-0.24077	0.30072	0.07415
39/ 39/ 22 (C)	0.36651	0.02832	0.30003	0.09860	2.04277	-0.03037
39/ 39/ 23 (C)	0.63704	-0.04882	0.35462	-0.07111	-2.91280	0.02190
39/ 39/ 24 (C)	0.60035	-0.02022	0.34524	-0.02945	-3.73777	0.00907
39/ 39/ 25 (C)	-0.31353	-0.10203	-0.27836	-0.32103	3.83580	0.09887
39/ 39/ 26 (C)	-0.17559	0.03777	0.00771	0.13147	0.71115	-0.04049
39/ 39/ 27 (C)	0.14512	-0.06509	0.08050	-0.09481	-0.44890	0.02920
39/ 39/ 28 (C)	0.09621	-0.02698	0.06799	-0.03927	-1.54885	0.01209
39/ 39/ 29 (C)	0.30519	-0.00000	0.17928	0.00000	-1.79916	-0.00000
39/ 39/ 30 (C)	0.53379	-0.00000	0.30288	0.00000	-2.78835	-0.00000
39/ 39/ 31 (C)	0.77718	-0.08163	0.34599	-0.25683	-1.84452	0.07909
39/ 39/ 32 (C)	0.86753	0.03021	0.57584	0.10517	-4.34424	-0.03239
39/ 39/ 33 (C)	-0.17712	-0.16325	-0.26543	-0.51365	4.58264	0.15818
39/ 39/ 34 (C)	0.04358	0.06043	0.19228	0.21035	-0.41581	-0.06478
39/ 39/ 35 (C)	0.35094	-0.09299	0.21859	-0.13544	-1.58038	0.04171
39/ 39/ 36 (C)	0.32106	-0.03852	0.20072	-0.05610	-3.15174	0.01728
39/ 39/ 37 (C)	-0.51472	-0.16325	-0.46306	-0.51365	6.21439	0.15818
39/ 39/ 38 (C)	-0.29402	0.06043	0.00466	0.21035	1.21494	-0.06478
39/ 39/ 39 (C)	0.21656	-0.09299	0.12049	-0.13544	-0.66536	0.04171
39/ 39/ 40 (C)	0.16678	-0.03852	0.10262	-0.05610	-2.25772	0.01728
39/ 55/ 1	0.11394	-0.00000	0.08330	0.00000	1.06784	-0.00000
39/ 55/ 2	-27.22027	0.00000	-14.92101	-0.00000	-233.48305	0.00000
39/ 55/ 3	-27.22027	0.00000	-14.92101	-0.00000	-233.48305	0.00000
39/ 55/ 4	-27.22027	0.00000	-14.92101	-0.00000	-233.48305	0.00000
39/ 55/ 5	-0.45674	-3.47164	-4.04884	-10.92321	-7.54501	86.66335
39/ 55/ 6	4.23665	1.28499	5.66484	-4.47321	119.74561	-32.21727
39/ 55/ 7	-23.52945	-18.34182	-6.01543	-26.71542	-673.47475	448.43104
39/ 55/ 8	9.74622	-44.28108	2.49167	-64.49673	278.96238	1082.66829
39/ 55/ 9 (C)	0.19560	-0.00000	0.12806	0.00000	1.78829	-0.00000
39/ 55/ 10 (C)	0.54441	-0.00000	0.29842	0.00000	4.66966	-0.00000
39/ 55/ 11 (C)	-0.44432	-0.10203	-0.35519	-0.32103	-3.91781	2.54767
39/ 55/ 12 (C)	-0.30638	0.03777	-0.06912	0.13147	-0.17671	-0.94687
39/ 55/ 13 (C)	0.02047	-0.09299	0.00523	-0.13544	0.56592	2.27348

Bar/Node/Case	FX (kip)	FY (kip)	FZ (kip)	MX (kip-in)	MY (kip-in)	MZ (kip-in)
39/ 55/ 14 (C)	0.04941	-0.03852	-0.01263	-0.05610	-1.41430	0.94171
39/ 55/ 15 (C)	0.19560	-0.00000	0.12806	0.00000	1.78829	-0.00000
39/ 55/ 16 (C)	0.74001	-0.00000	0.42648	0.00000	6.45795	-0.00000
39/ 55/ 17 (C)	-0.24872	-0.10203	-0.22714	-0.32103	-2.12952	2.54752
39/ 55/ 18 (C)	-0.11078	0.03777	0.05894	0.13147	1.51157	-0.94687
39/ 55/ 19 (C)	0.21607	-0.09299	0.13329	-0.13544	2.37411	2.27348
39/ 55/ 20 (C)	0.14619	-0.03852	0.11543	-0.05610	0.37399	0.94171
39/ 55/ 21 (C)	0.27088	-0.07652	0.08548	-0.24077	2.35217	1.91072
39/ 55/ 22 (C)	0.37412	0.02832	0.30003	0.09860	5.15800	-0.71015
39/ 55/ 23 (C)	0.61462	-0.04882	0.35462	-0.07111	5.59809	1.19356
39/ 55/ 24 (C)	0.57798	-0.02022	0.34524	-0.02945	4.54803	0.49440
39/ 55/ 25 (C)	-0.32698	-0.10203	-0.27836	-0.32103	-2.84484	2.54752
39/ 55/ 26 (C)	-0.18902	0.03777	0.00771	0.13147	0.89628	-0.94687
39/ 55/ 27 (C)	0.13169	-0.06509	0.08050	-0.09481	1.48305	1.59143
39/ 55/ 28 (C)	0.08277	-0.02698	0.06799	-0.03927	0.03298	0.65919
39/ 55/ 29 (C)	0.27384	-0.00000	0.17928	0.00000	2.50360	-0.00000
39/ 55/ 30 (C)	0.50592	-0.00000	0.30288	0.00000	4.48077	-0.00000
39/ 55/ 31 (C)	0.75031	-0.08163	0.34699	-0.25683	6.48315	2.23810
39/ 55/ 32 (C)	0.86066	0.03021	0.57584	0.10517	9.47603	-0.75749
39/ 55/ 33 (C)	-0.20399	-0.16325	-0.26543	-0.51365	-1.78772	4.07620
39/ 55/ 34 (C)	0.01671	0.06043	0.19228	0.21035	4.19803	-1.51498
39/ 55/ 35 (C)	0.36407	-0.09299	0.21859	-0.13544	3.66570	2.27348
39/ 55/ 36 (C)	0.29419	-0.03852	0.20072	-0.05610	1.65558	0.94171
39/ 55/ 37 (C)	-0.53487	-0.10323	-0.45306	-0.51365	-4.85904	4.07620
39/ 55/ 38 (C)	-0.31417	0.06043	0.00466	0.21035	1.32672	-1.51498
39/ 55/ 39 (C)	0.19651	-0.09299	0.12049	-0.13544	2.19528	2.27348
39/ 55/ 40 (C)	0.12663	-0.03852	0.10262	-0.05610	0.19516	0.94171
40/ 40/ 1	0.13633	-0.00000	0.08330	0.00000	-0.91125	-0.00000
40/ 40/ 2	-27.22027	0.00000	-14.92101	-0.00000	124.62111	0.00000
40/ 40/ 3	-27.22027	0.00000	-14.92101	-0.00000	124.62111	0.00000
40/ 40/ 4	-27.22027	0.00000	-14.92101	-0.00000	124.62111	0.00000
40/ 40/ 5	4.22363	-1.28187	5.66287	-4.49103	-16.32637	1.38306
40/ 40/ 6	-0.45135	3.47917	-4.03974	10.88019	89.47537	-3.35086
40/ 40/ 7	-9.74622	-44.28108	-2.49167	-64.49673	-219.16226	19.66240
40/ 40/ 8	23.52945	-18.34182	6.01543	-26.71542	529.10451	8.22728
40/ 40/ 9 (C)	0.21799	-0.00000	0.12806	0.00000	-1.28511	-0.00000

Bar/Node/Case	FX (kip)	FY (kip)	FZ (kip)	MX (kip-in)	MY (kip-in)	MZ (kip-in)
40/ 40/ 10 (C)	0.54441	-0.00000	0.29842	0.00000	-2.49242	-0.00000
40/ 40/ 11 (C)	-0.30676	-0.03767	-0.00977	-0.13199	1.49292	0.04065
40/ 40/ 12 (C)	-0.44416	0.10225	-0.35493	0.31977	4.60243	-0.09848
40/ 40/ 13 (C)	0.01941	-0.03852	0.01263	-0.05610	1.11112	0.01728
40/ 40/ 14 (C)	-0.02047	-0.09299	-0.00523	-0.13544	-0.46024	0.04171
40/ 40/ 15 (C)	0.21799	-0.00000	0.12806	0.00000	-1.28511	-0.00000
40/ 40/ 16 (C)	0.76240	-0.00000	0.42648	0.00000	-3.77754	-0.00000
40/ 40/ 17 (C)	-0.08877	-0.03767	0.06829	-0.13199	0.20781	0.04065
40/ 40/ 18 (C)	-0.22617	0.10225	-0.22687	0.31977	3.31732	-0.09848
40/ 40/ 19 (C)	0.26740	-0.03852	0.14069	-0.05610	-0.17399	0.01728
40/ 40/ 20 (C)	0.19752	-0.09299	0.12283	-0.13544	-1.74535	0.04171
40/ 40/ 21 (C)	0.39622	-0.02826	0.29955	-0.09899	-2.03474	0.03049
40/ 40/ 22 (C)	0.29317	0.07669	0.08568	0.23983	0.29739	-0.07386
40/ 40/ 23 (C)	0.65224	-0.02022	0.35851	-0.02945	-2.57109	0.00907
40/ 40/ 24 (C)	0.61555	-0.04882	0.34913	-0.07111	-3.39606	0.02190
40/ 40/ 25 (C)	-0.17987	-0.03767	0.00707	-0.13199	0.72185	0.04065
40/ 40/ 26 (C)	-0.31337	0.10225	-0.27809	0.31977	3.83137	-0.09848
40/ 40/ 27 (C)	0.16538	-0.02698	0.08568	-0.03927	0.00672	0.01209
40/ 40/ 28 (C)	0.11647	-0.06509	0.07317	-0.09481	-1.06324	0.02920
40/ 40/ 29 (C)	0.30519	-0.00000	0.17928	0.00000	-1.79916	-0.00000
40/ 40/ 30 (C)	0.53379	-0.00000	0.30288	0.00000	-2.78835	-0.00000
40/ 40/ 31 (C)	0.88723	-0.03014	0.57533	-0.10559	-4.33568	0.05252
40/ 40/ 32 (C)	0.77731	0.08180	0.34720	0.25582	-1.84807	-0.07878
40/ 40/ 33 (C)	0.04257	-0.06028	0.19125	-0.21119	-0.39968	0.06504
40/ 40/ 34 (C)	-0.17687	0.16360	-0.26500	0.51163	4.57555	-0.15756
40/ 40/ 35 (C)	0.41988	-0.03852	0.22599	-0.05610	-0.92950	0.01728
40/ 40/ 36 (C)	0.35000	-0.09299	0.20812	-0.13544	-2.50086	0.04171
40/ 40/ 37 (C)	-0.29463	-0.06028	0.00362	-0.21119	1.23207	0.06504
40/ 40/ 38 (C)	-0.51447	0.16360	-0.45283	0.51163	6.20729	-0.15756
40/ 40/ 39 (C)	0.24560	-0.03852	0.12788	0.05610	-0.04548	0.01728
40/ 40/ 40 (C)	0.17572	-0.09299	0.11002	-0.13544	-1.61684	0.04171
40/ 56/ 1	0.11394	-0.00000	0.08330	0.00000	1.06784	-0.00000
40/ 56/ 2	-27.22027	0.00000	-14.92101	-0.00000	-233.48304	0.00000
40/ 56/ 3	-27.22027	0.00000	-14.92101	-0.00000	-233.48304	0.00000
40/ 56/ 4	-27.22027	0.00000	-14.92101	-0.00000	-233.48304	0.00000
40/ 56/ 5	4.22363	-1.28187	5.66287	-4.49103	119.58252	32.14795

Bar/Node/Case	FX (kip)	FY (kip)	FZ (kip)	MX (kip-in)	MY (kip-in)	MZ (kip-in)
40/ 56/ 6	0.45135	3.47917	-4.03974	10.88015	-7.47835	-86.85071
40/ 56/ 7	-9.74522	-44.28108	-2.49187	-84.49673	-278.96238	1082.60829
40/ 56/ 8	23.52945	-18.34182	6.01543	-26.71542	673.47475	448.43104
40/ 56/ 9 (C)	0.19560	-0.00000	0.12806	0.00000	1.78829	-0.00000
40/ 56/ 10 (C)	0.54441	-0.00000	0.29842	0.00000	4.66966	-0.00000
40/ 56/ 11 (C)	-0.30876	-0.03767	-0.06977	-0.13199	-0.18151	0.94483
40/ 56/ 12 (C)	-0.44416	0.10225	-0.35493	0.31977	-3.91583	-2.55254
40/ 56/ 13 (C)	0.04941	-0.03852	0.01263	-0.05610	1.41430	0.94171
40/ 56/ 14 (C)	-0.02047	-0.09299	-0.00523	-0.13544	-0.58582	2.27348
40/ 56/ 15 (C)	0.19560	-0.00000	0.12806	0.00000	1.78829	-0.00000
40/ 56/ 16 (C)	0.74001	-0.00000	0.42648	0.00000	6.45795	-0.00000
40/ 56/ 17 (C)	-0.11116	-0.03767	0.05829	-0.13199	1.89678	0.94483
40/ 56/ 18 (C)	-0.24858	0.10225	-0.22687	0.31977	-2.12754	-2.55254
40/ 56/ 19 (C)	0.24501	-0.03852	0.14069	-0.05610	3.20258	0.94171
40/ 56/ 20 (C)	0.17513	-0.09299	0.12283	-0.13544	1.20247	2.27348
40/ 56/ 21 (C)	0.37383	-0.02826	0.29955	-0.09899	5.15440	0.70862
40/ 56/ 22 (C)	0.27078	0.07669	0.08568	0.23983	2.35366	-1.91441
40/ 56/ 23 (C)	0.62985	-0.02022	0.35851	-0.02945	6.03304	0.49440
40/ 56/ 24 (C)	0.59316	-0.04882	0.34913	-0.07111	4.98298	1.19358
40/ 56/ 25 (C)	-0.18940	-0.03767	0.00707	-0.13199	0.89147	0.94483
40/ 56/ 26 (C)	-0.32680	0.10225	-0.27809	0.31977	-2.84285	-2.55254
40/ 56/ 27 (C)	0.15195	-0.02696	0.08568	-0.03927	2.06298	0.65919
40/ 56/ 28 (C)	0.10303	-0.06509	0.07317	-0.09431	0.86290	1.59143
40/ 56/ 29 (C)	0.27384	-0.00000	0.17928	0.00000	2.50360	-0.00000
40/ 56/ 30 (C)	0.50692	-0.00000	0.30288	0.00000	4.48077	-0.00000
40/ 56/ 31 (C)	0.86036	-0.03014	0.57533	-0.10559	9.47220	0.75586
40/ 56/ 32 (C)	0.75044	0.08180	0.34720	0.25582	6.48474	-2.04203
40/ 56/ 33 (C)	0.01610	-0.06028	0.19125	-0.21119	4.19036	1.51173
40/ 56/ 34 (C)	-0.20374	0.16360	-0.26500	0.51163	-1.78455	-4.08407
40/ 56/ 35 (C)	0.39301	-0.03852	0.22599	-0.05610	4.49417	0.94171
40/ 56/ 36 (C)	0.32313	-0.09299	0.20812	-0.13544	2.49405	2.27348
40/ 56/ 37 (C)	-0.31478	-0.06028	0.00362	-0.21119	1.31605	1.51173
40/ 56/ 38 (C)	-0.53462	0.16360	-0.45263	0.51163	-4.55586	-4.08407
40/ 56/ 39 (C)	0.22545	-0.03852	0.12788	-0.05610	3.02375	0.94171
40/ 56/ 40 (C)	0.15557	-0.09299	0.11002	-0.13544	1.02354	2.27348
41/ 49/ 1	-0.01457	0.00000	0.01613	0.00000	-0.22549	0.00000

Bar/Node/Case	FX (kip)	FY (kip)	FZ (kip)	MX (kip-in)	MY (kip-in)	MZ (kip-in)
41/ 49/ 2	-2.19508	-0.00000	-8.43014	-0.00000	100.60598	-0.00000
41/ 49/ 3	-2.19508	-0.00000	-8.43014	-0.00000	100.60598	-0.00000
41/ 49/ 4	-2.19508	-0.00000	-8.43014	-0.00000	100.60598	-0.00000
41/ 49/ 5	-2.34181	0.48335	0.91093	14.60283	-30.03525	15.92321
41/ 49/ 6	4.77706	-0.73455	2.08558	-24.29423	-68.35606	-23.99905
41/ 49/ 7	36.26958	5.17412	-13.43750	-7.86438	418.92313	34.11281
41/ 49/ 8	-24.34756	6.74789	13.43750	7.86438	-444.98470	84.70219
41/ 49/ 9 (C)	-0.00798	0.00000	0.04142	0.00000	-0.52730	0.00000
41/ 49/ 10 (C)	0.04390	0.00000	0.16860	0.00000	-2.01212	0.00000
41/ 49/ 11 (C)	-0.10357	0.01421	-0.10668	0.42918	0.70986	0.46798
41/ 49/ 12 (C)	0.10565	-0.02159	-0.07215	-0.71401	-0.35761	-0.70533
41/ 49/ 13 (C)	-0.05113	0.01417	0.02822	0.01652	-0.93447	0.17787
41/ 49/ 14 (C)	-0.07617	0.01087	-0.02822	-0.01652	0.87974	0.07164
41/ 49/ 15 (C)	-0.00798	0.00000	0.04142	0.00000	-0.52730	0.00000
41/ 49/ 16 (C)	0.03592	0.00000	0.21003	0.00000	-2.53942	0.00000
41/ 49/ 17 (C)	-0.11156	0.01421	-0.06525	0.42918	0.18255	0.46798
41/ 49/ 18 (C)	0.09767	-0.02159	-0.03073	-0.71401	-0.88492	-0.70533
41/ 49/ 19 (C)	-0.05911	0.01417	0.06964	0.01652	-1.46177	0.17787
41/ 49/ 20 (C)	-0.08415	0.01087	0.01221	-0.01652	0.35243	0.07164
41/ 49/ 21 (C)	-0.05274	0.01065	0.08787	0.32188	-1.50400	0.35099
41/ 49/ 22 (C)	0.10418	-0.01619	0.11376	-0.53551	-2.30460	-0.52900
41/ 49/ 23 (C)	-0.00190	0.00744	0.18269	0.00867	-2.52699	0.09338
41/ 49/ 24 (C)	-0.01505	0.00570	0.15306	-0.00867	-1.57453	0.03761
41/ 49/ 25 (C)	-0.10836	0.01421	-0.08182	0.42918	0.38347	0.46798
41/ 49/ 26 (C)	0.10086	-0.02159	-0.04730	-0.71401	-0.67399	-0.70533
41/ 49/ 27 (C)	-0.04058	0.00992	0.04461	0.01156	-0.97051	0.12451
41/ 49/ 28 (C)	-0.05811	0.00761	0.00510	-0.01156	0.29943	0.05015
41/ 49/ 29 (C)	-0.01118	0.00000	0.05799	0.00000	-0.73823	0.00000
41/ 49/ 30 (C)	0.01237	0.00000	0.13401	0.00000	-1.63882	0.00000
41/ 49/ 31 (C)	-0.02220	0.01136	0.23413	0.34334	-3.28427	0.37439
41/ 49/ 32 (C)	0.14518	-0.01727	0.26175	-0.57121	-4.13825	-0.56427
41/ 49/ 33 (C)	-0.15335	0.02273	-0.03667	0.68668	-0.50305	0.74877
41/ 49/ 34 (C)	0.18141	-0.03454	0.01656	-1.14241	-2.21100	-1.12853
41/ 49/ 35 (C)	-0.05193	0.01417	0.11165	0.01652	-1.96986	0.17787
41/ 49/ 36 (C)	-0.07697	0.01087	0.05521	-0.01652	-0.15545	0.07164
41/ 49/ 37 (C)	-0.17290	0.02273	-0.13340	0.68668	0.66120	0.74877

Bar/Node/Case	FX (kip)	FY (kip)	FZ (kip)	MX (kip-in)	MY (kip-in)	MZ (kip-in)
41/ 49/ 38 (C)	0.16185	-0.03454	-0.07816	-1.14241	-1.04675	-1.12853
41/ 49/ 39 (C)	-0.05832	0.01417	0.06550	0.01652	-1.40904	0.17787
41/ 49/ 40 (C)	-0.08335	0.01087	0.00906	-0.01652	0.40517	0.07164
41/ 50/ 1	-0.01457	0.00000	-0.01613	0.00000	-0.22549	-0.00000
41/ 50/ 2	-2.19508	-0.00000	8.43014	-0.00000	100.60598	0.00000
41/ 50/ 3	-2.19508	-0.00000	8.43014	-0.00000	100.60598	0.00000
41/ 50/ 4	-2.19508	-0.00000	8.43014	-0.00000	100.60598	0.00000
41/ 50/ 5	-2.34181	0.48335	0.91093	14.60283	28.52919	-15.15149
41/ 50/ 6	4.77706	-0.73455	2.08558	-24.29423	57.72763	23.22592
41/ 50/ 7	-24.34756	-6.74789	-13.43750	-7.86438	-444.98470	84.70219
41/ 50/ 8	-36.26958	-5.17412	13.43750	7.86438	418.92313	34.11281
41/ 50/ 9 (C)	-0.00798	0.00000	-0.04142	0.00000	-0.52730	-0.00000
41/ 50/ 10 (C)	0.04390	0.00000	-0.16860	0.00000	-2.01212	-0.00000
41/ 50/ 11 (C)	-0.10357	0.01421	0.10622	0.42918	2.43107	-0.44530
41/ 50/ 12 (C)	0.10565	-0.02159	0.19474	-0.71401	3.59311	0.68261
41/ 50/ 13 (C)	-0.07617	-0.01087	0.02822	0.01652	0.87974	0.07164
41/ 50/ 14 (C)	-0.05113	-0.01417	-0.02822	-0.01652	-0.93447	0.17787
41/ 50/ 15 (C)	-0.00798	0.00000	-0.04142	0.00000	-0.52730	-0.00000
41/ 50/ 16 (C)	0.03592	0.00000	-0.21003	0.00000	-2.53942	0.00000
41/ 50/ 17 (C)	0.11156	0.01421	0.11880	0.42918	1.90376	-0.44530
41/ 50/ 18 (C)	0.09767	0.02159	0.15332	-0.71401	3.05580	0.68261
41/ 50/ 19 (C)	-0.08415	-0.01087	-0.01221	0.01652	0.35243	0.07164
41/ 50/ 20 (C)	-0.05911	-0.01417	-0.06964	-0.01652	-1.46177	0.17787
41/ 50/ 21 (C)	-0.05274	0.01065	-0.04771	0.32188	-0.21309	-0.33398
41/ 50/ 22 (C)	0.10418	-0.01619	-0.02182	-0.53551	0.65094	0.51196
41/ 50/ 23 (C)	-0.01505	-0.00570	-0.15308	0.00867	-1.57453	0.03761
41/ 50/ 24 (C)	-0.00190	-0.00744	-0.18269	-0.00867	-2.52699	0.09338
41/ 50/ 25 (C)	-0.10836	0.01421	0.13537	0.42918	2.11468	-0.44530
41/ 50/ 26 (C)	0.10086	-0.02159	0.16988	-0.71401	3.26673	0.68261
41/ 50/ 27 (C)	-0.05811	-0.00761	-0.00510	0.01156	0.29943	0.05015
41/ 50/ 28 (C)	-0.04058	-0.00992	-0.04461	-0.01156	-0.97051	0.12451
41/ 50/ 29 (C)	-0.01118	0.00000	-0.05799	0.00000	-0.73823	-0.00000
41/ 50/ 30 (C)	0.01237	0.00000	-0.13401	0.00000	-1.63882	-0.00000
41/ 50/ 31 (C)	-0.02220	0.01136	-0.19130	0.34334	-1.90730	-0.35624
41/ 50/ 32 (C)	0.14518	-0.01727	-0.16368	-0.57121	-0.98537	0.54609
41/ 50/ 33 (C)	-0.15335	0.02273	0.12234	0.68668	2.25088	-0.71248

Bar/Node/Case	FX (kip)	FY (kip)	FZ (kip)	MX (kip-in)	MY (kip-in)	MZ (kip-in)
41/ 50/ 34 (C)	0.18141	-0.03454	0.17758	-1.14241	4.09415	1.06218
41/ 50/ 35 (C)	-0.07697	-0.01087	-0.05521	0.01652	-0.15545	0.07164
41/ 50/ 36 (C)	-0.05193	-0.01417	-0.11165	-0.01652	-1.96986	0.17787
41/ 50/ 37 (C)	-0.17290	0.02273	0.21907	0.68668	3.41513	-0.71248
41/ 50/ 38 (C)	0.16185	-0.03454	0.27431	-1.14241	5.25840	1.06218
41/ 50/ 39 (C)	-0.08335	-0.01087	-0.00906	0.01652	0.40517	0.07164
41/ 50/ 40 (C)	-0.05832	-0.01417	-0.06550	-0.01652	-1.40904	0.17787
42/ 50/ 1	-0.01457	0.00000	0.01613	0.00000	-0.22549	0.00000
42/ 50/ 2	-2.19508	-0.00000	-8.43014	0.00000	100.60598	-0.00000
42/ 50/ 3	-2.19508	-0.00000	-8.43014	0.00000	100.60598	-0.00000
42/ 50/ 4	-2.19508	-0.00000	-8.43014	0.00000	100.60598	-0.00000
42/ 50/ 5	1.13707	0.32611	1.53135	8.95495	-54.79367	6.08954
42/ 50/ 6	6.11162	0.00000	-0.00000	0.00000	4.75397	5.91356
42/ 50/ 7	-42.86279	8.43014	0.00000	-0.00000	18.42831	84.01489
42/ 50/ 8	8.43014	1.11282	19.00349	11.12192	610.87508	35.77210
42/ 50/ 9 (C)	-0.00798	0.00000	0.04142	-0.00000	-0.52730	0.00000
42/ 50/ 10 (C)	0.04390	0.00000	0.16860	-0.00000	-2.01212	0.00000
42/ 50/ 11 (C)	-0.00133	0.00958	-0.06550	0.26319	-0.01779	0.17897
42/ 50/ 12 (C)	0.14487	-0.00000	-0.13346	0.00000	1.73231	0.17380
42/ 50/ 13 (C)	0.01770	0.00234	0.03991	0.02336	-1.26284	0.07512
42/ 50/ 14 (C)	-0.00001	0.01770	0.00000	-0.00000	-0.03870	0.17643
42/ 50/ 15 (C)	-0.00798	0.00000	0.04142	-0.00000	-0.52730	0.00000
42/ 50/ 16 (C)	0.03592	0.00000	0.21003	-0.00000	2.53942	0.00000
42/ 50/ 17 (C)	-0.00931	0.00958	-0.04408	0.26319	0.54510	0.17897
42/ 50/ 18 (C)	0.13689	-0.00000	-0.09202	0.00000	1.20501	0.17380
42/ 50/ 19 (C)	0.00972	0.00234	0.08133	0.02336	-1.81014	0.07512
42/ 50/ 20 (C)	-0.09800	0.01770	0.04142	-0.00000	-0.56600	0.17643
42/ 50/ 21 (C)	0.02394	0.00719	0.10375	0.19739	-2.04974	0.13423
42/ 50/ 22 (C)	0.13360	0.00000	0.06779	-0.00000	-0.73716	0.13035
42/ 50/ 23 (C)	0.03424	0.00123	0.18883	0.01226	-2.70988	0.03944
42/ 50/ 24 (C)	-0.02231	0.00929	0.16788	-0.00000	-2.05671	0.09263
42/ 50/ 25 (C)	-0.00612	0.00958	-0.05065	0.26319	-0.33418	0.17897
42/ 50/ 26 (C)	0.14008	-0.00000	-0.10859	0.00000	1.41593	0.17380
42/ 50/ 27 (C)	0.00750	0.00164	0.05279	0.01635	-1.21437	0.05258
42/ 50/ 28 (C)	-0.06780	0.01239	0.02485	-0.00000	-0.34347	0.12350
42/ 50/ 29 (C)	-0.01118	0.00000	0.05799	-0.00000	-0.73823	0.00000

Bar/Node/Case	FX (kip)	FY (kip)	FZ (kip)	MX (kip-in)	MY (kip-in)	MZ (kip-in)
42/ 50/ 30 (C)	0.01237	0.00000	0.13401	-0.00000	-1.63882	0.00000
42/ 50/ 31 (C)	0.05960	0.00767	0.25107	0.21055	-3.86639	0.14318
42/ 50/ 32 (C)	0.17656	0.00000	0.21271	-0.00000	-2.46631	0.13904
42/ 50/ 33 (C)	0.01024	0.01533	-0.00280	0.42110	-1.66729	0.28635
42/ 50/ 34 (C)	0.24416	-0.00000	-0.07951	0.00000	1.13287	0.27808
42/ 50/ 35 (C)	0.01890	0.00234	0.12334	0.02336	-2.31803	0.07512
42/ 50/ 36 (C)	-0.09081	0.01770	0.08343	-0.00000	-1.07389	0.17643
42/ 50/ 37 (C)	-0.00931	0.01533	-0.09952	0.42110	-0.50304	0.28635
42/ 50/ 38 (C)	0.22461	-0.00000	-0.17624	0.00000	2.29713	0.27808
42/ 50/ 39 (C)	0.01052	0.00234	0.07719	0.02336	-1.75741	0.07512
42/ 50/ 40 (C)	-0.09720	0.01770	0.03728	-0.00000	-0.51327	0.17643
42/ 51/ 1	-0.01457	0.00000	-0.01613	-0.00000	-0.22549	-0.00000
42/ 51/ 2	-2.19508	-0.00000	8.43014	0.00000	100.60598	0.00000
42/ 51/ 3	-2.19508	-0.00000	8.43014	0.00000	100.60598	0.00000
42/ 51/ 4	-2.19508	-0.00000	8.43014	0.00000	100.60598	0.00000
42/ 51/ 5	1.13707	0.32611	1.63135	8.95495	50.08727	-14.87618
42/ 51/ 6	6.11162	0.00000	-0.00000	0.00000	4.75397	5.91356
42/ 51/ 7	-42.86279	-8.43014	0.00000	-0.00000	-18.42831	84.01489
42/ 51/ 8	-8.43014	1.11282	19.00349	11.12192	610.87508	-35.77210
42/ 51/ 9 (C)	-0.00798	0.00000	-0.04142	-0.00000	-0.52730	-0.00000
42/ 51/ 10 (C)	0.04390	0.00000	-0.16860	-0.00000	-2.01212	-0.00000
42/ 51/ 11 (C)	-0.00133	0.00958	0.18139	0.26319	3.05466	-0.43721
42/ 51/ 12 (C)	0.14487	-0.00007	0.13345	0.00000	1.73231	0.17380
42/ 51/ 13 (C)	-0.01770	0.00234	0.0395	0.02336	1.28284	-0.07512
42/ 51/ 14 (C)	-0.09001	-0.01770	0.00000	-0.00000	-0.03870	0.17643
42/ 51/ 15 (C)	-0.00798	0.00000	-0.04142	-0.00000	-0.52730	-0.00000
42/ 51/ 16 (C)	0.03592	0.00000	-0.21003	-0.00000	-2.53942	0.00000
42/ 51/ 17 (C)	-0.00931	0.00958	0.13967	0.26319	2.53735	-0.43721
42/ 51/ 18 (C)	0.13689	-0.00000	0.09202	0.00000	1.20601	0.17380
42/ 51/ 19 (C)	-0.02569	0.00234	-0.00152	0.02336	0.75553	-0.07512
42/ 51/ 20 (C)	-0.09800	-0.01770	-0.04142	-0.00000	-0.55600	0.17643
42/ 51/ 21 (C)	0.02394	0.00719	-0.03183	0.19739	0.26210	-0.32791
42/ 51/ 22 (C)	0.13360	0.00000	-0.06779	-0.00000	-0.73716	0.13035
42/ 51/ 23 (C)	0.01565	0.00123	-0.14993	0.01236	-1.36290	-0.03944
42/ 51/ 24 (C)	-0.02231	-0.00929	-0.16788	-0.00000	-2.05671	0.09293
42/ 51/ 25 (C)	-0.00812	0.00958	0.15654	0.26319	2.74828	-0.43721

Bar/Node/Case	FX (kip)	FY (kip)	FZ (kip)	MX (kip-in)	MY (kip-in)	MZ (kip-in)
42/ 51/ 26 (C)	0.14008	-0.00000	0.16859	0.00000	1.41593	0.17380
42/ 51/ 27 (C)	-0.01718	0.00164	0.00308	0.01635	0.58160	-0.05258
42/ 51/ 28 (C)	-0.06780	-0.01239	-0.02485	-0.00000	-0.34347	0.12350
42/ 51/ 29 (C)	-0.01118	0.00000	-0.05799	-0.00000	-0.73823	-0.00000
42/ 51/ 30 (C)	0.01237	0.00000	-0.13401	-0.00000	-1.63882	-0.00000
42/ 51/ 31 (C)	0.05960	0.00767	-0.17436	0.21055	-1.46043	-0.34977
42/ 51/ 32 (C)	0.17656	0.00000	-0.21271	-0.00000	-2.46631	0.13904
42/ 51/ 33 (C)	0.01024	0.01533	0.15622	0.42110	3.26463	-0.69954
42/ 51/ 34 (C)	0.24416	-0.00000	0.01951	0.00000	1.13287	0.27808
42/ 51/ 35 (C)	-0.01850	0.00234	-0.04352	0.02336	0.24765	-0.07512
42/ 51/ 36 (C)	-0.09081	-0.01770	-0.08343	-0.00000	-1.07389	0.17643
42/ 51/ 37 (C)	-0.00931	0.01533	0.25295	0.42110	4.42886	-0.69954
42/ 51/ 38 (C)	0.22461	-0.00000	0.17624	0.00000	2.29713	0.27808
42/ 51/ 39 (C)	-0.02489	0.00234	0.00263	0.02336	0.80826	-0.07512
42/ 51/ 40 (C)	-0.09720	-0.01770	-0.03728	-0.00000	-0.51327	0.17643
43/ 51/ 1	-0.01457	0.00000	0.01613	0.00000	-0.22549	0.00000
43/ 51/ 2	-2.19508	-0.00000	-8.43014	-0.00000	100.60598	-0.00000
43/ 51/ 3	-2.19508	-0.00000	-8.43014	-0.00000	100.60598	-0.00000
43/ 51/ 4	-2.19508	-0.00000	-8.43014	-0.00000	100.60598	-0.00000
43/ 51/ 5	4.77037	-0.73434	2.08329	24.29770	66.28834	23.99966
43/ 51/ 6	4.77706	0.73455	-2.06558	24.29423	67.72763	23.22592
43/ 51/ 7	-24.34756	6.74789	13.43750	7.86438	-444.98470	84.70219
43/ 51/ 8	36.26958	-5.17412	13.43750	7.86438	-418.92313	-34.11281
43/ 51/ 9 (C)	-0.00798	0.00000	0.04142	0.00000	-0.52730	0.00000
43/ 51/ 10 (C)	0.04390	0.00000	0.16860	0.00000	-2.01212	0.00000
43/ 51/ 11 (C)	0.10545	-0.02158	-0.07222	-0.71411	-0.35562	-0.70512
43/ 51/ 12 (C)	0.10565	0.02159	-0.19474	0.71401	3.58311	0.68261
43/ 51/ 13 (C)	0.07617	-0.01087	0.02822	0.01652	-0.87974	-0.07164
43/ 51/ 14 (C)	-0.05113	0.01417	0.02822	0.01652	-0.93447	0.17787
43/ 51/ 15 (C)	-0.00798	0.00000	0.04142	0.00000	-0.52730	0.00000
43/ 51/ 16 (C)	0.02592	0.00000	0.21003	0.00000	-2.53942	0.00000
43/ 51/ 17 (C)	0.09747	-0.02158	-0.03080	-0.71411	-0.88293	-0.70512
43/ 51/ 18 (C)	0.09767	0.02159	-0.15332	0.71401	3.05580	0.68261
43/ 51/ 19 (C)	0.06818	-0.01087	0.06964	0.01652	-1.40704	-0.07164
43/ 51/ 20 (C)	-0.05911	0.01417	0.06964	0.01652	-1.46177	0.17787
43/ 51/ 21 (C)	0.10403	-0.01619	0.11371	-0.53558	-2.30311	-0.52884

Bar/Node/Case	FX (kip)	FY (kip)	FZ (kip)	MX (kip-in)	MY (kip-in)	MZ (kip-in)
43/ 51/ 22 (C)	0.10418	0.01619	0.02192	0.53551	0.65049	0.51198
43/ 51/ 23 (C)	0.06493	-0.00570	0.18269	0.00867	-2.49026	-0.03761
43/ 51/ 24 (C)	-0.00190	0.00744	0.18269	0.00867	-2.52699	0.09338
43/ 51/ 25 (C)	0.10066	-0.02158	-0.04731	-0.71411	-0.67200	-0.70512
43/ 51/ 26 (C)	0.10086	0.02159	-0.16989	0.71401	3.26673	0.68261
43/ 51/ 27 (C)	0.04853	-0.00761	0.04461	0.01156	-0.93220	-0.05015
43/ 51/ 28 (C)	-0.04058	0.00992	0.04461	0.01156	-0.97051	0.12451
43/ 51/ 29 (C)	-0.01118	0.00000	0.05793	0.00000	-0.73823	0.00000
43/ 51/ 30 (C)	0.01237	0.00000	0.13401	0.00000	-1.63882	0.00000
43/ 51/ 31 (C)	0.14503	-0.01727	0.26172	-0.57129	-4.13665	-0.53409
43/ 51/ 32 (C)	0.14518	0.01727	0.16368	0.57121	-0.98567	0.54609
43/ 51/ 33 (C)	0.18109	-0.03453	0.01845	-1.14257	-2.20782	-1.12818
43/ 51/ 34 (C)	0.18141	0.03454	-0.17758	1.14241	4.09415	1.09218
43/ 51/ 35 (C)	0.07536	-0.01087	0.11165	0.01652	-1.91493	-0.07164
43/ 51/ 36 (C)	-0.05193	0.01417	0.11165	0.01652	-1.96966	0.17787
43/ 51/ 37 (C)	0.16154	-0.03453	-0.07827	-1.14257	-1.04357	1.12818
43/ 51/ 38 (C)	0.16185	0.03454	-0.27431	1.14241	5.25640	1.09218
43/ 51/ 39 (C)	0.06898	-0.01087	0.06550	0.01652	-1.35431	-0.07164
43/ 51/ 40 (C)	-0.05832	0.01417	0.06550	0.01652	-1.40904	0.17787
43/ 52/ 1	-0.01457	0.00000	-0.01613	0.00000	-0.22549	-0.00000
43/ 52/ 2	-2.19508	-0.00000	8.43014	-0.00000	100.60598	0.00000
43/ 52/ 3	-2.19508	-0.00000	8.43014	-0.00000	100.60598	0.00000
43/ 52/ 4	-2.19508	-0.00000	8.43014	-0.00000	100.60598	0.00000
43/ 52/ 5	4.77037	-0.73434	2.08329	-24.29770	67.64840	23.21066
43/ 52/ 6	4.77706	0.73455	-2.06558	24.29423	-66.35000	-23.99906
43/ 52/ 7	-36.26958	-5.17412	13.43750	7.86438	418.92313	34.11281
43/ 52/ 8	24.34756	6.74789	13.43750	7.86438	444.98470	-84.70219
43/ 52/ 9 (C)	-0.00798	0.00000	-0.04142	0.00000	-0.52730	-0.00000
43/ 52/ 10 (C)	0.04390	0.00000	-0.16860	0.00000	-2.01212	-0.00000
43/ 52/ 11 (C)	0.10545	-0.02158	0.19468	-0.71411	3.58078	0.68243
43/ 52/ 12 (C)	0.10565	0.02159	0.07215	0.71401	-0.35761	-0.70533
43/ 52/ 13 (C)	0.05113	0.01417	0.02822	0.01652	0.93447	-0.17787
43/ 52/ 14 (C)	-0.07617	-0.01087	0.02822	0.01652	0.87974	0.07164
43/ 52/ 15 (C)	-0.00798	0.00000	-0.04142	0.00000	-0.52730	-0.00000
43/ 52/ 16 (C)	0.03592	0.00000	-0.21003	0.00000	-2.53942	-0.00000
43/ 52/ 17 (C)	0.09747	-0.02158	0.15325	-0.71411	3.05348	0.68243

Bar/Node/Case	FX (kip)	FY (kip)	FZ (kip)	MX (kip-in)	MY (kip-in)	MZ (kip-in)
43/ 52/ 18 (C)	0.09767	0.02159	0.03073	0.71401	-0.88492	-0.70533
43/ 52/ 19 (C)	0.04315	0.01417	-0.01321	0.01652	0.40716	-0.17787
43/ 52/ 20 (C)	-0.08415	-0.01087	-0.01321	0.01652	0.35243	0.07164
43/ 52/ 21 (C)	0.10403	-0.01619	-0.02187	-0.53558	0.64919	0.51183
43/ 52/ 22 (C)	0.10418	0.01619	-0.11378	0.53551	-2.30460	-0.52900
43/ 52/ 23 (C)	0.05178	0.00744	-0.15306	0.00867	-1.54580	-0.09338
43/ 52/ 24 (C)	-0.01505	-0.00570	-0.15306	0.00867	-1.57453	0.03761
43/ 52/ 25 (C)	0.10065	-0.02158	0.18982	-0.71411	3.26440	0.68243
43/ 52/ 26 (C)	0.10089	0.02159	0.04730	0.71401	-0.67399	-0.70533
43/ 52/ 27 (C)	0.03100	0.00992	-0.00510	0.01156	0.33775	-0.12451
43/ 52/ 28 (C)	-0.05811	-0.00761	-0.00510	0.01156	0.29943	0.05015
43/ 52/ 29 (C)	-0.01118	0.00000	-0.05799	0.00000	-0.73823	-0.00000
43/ 52/ 30 (C)	0.01237	0.00000	-0.13401	0.00000	-1.63882	-0.00000
43/ 52/ 31 (C)	0.14502	-0.01727	-0.16373	-0.57129	-0.98753	0.54595
43/ 52/ 32 (C)	0.14518	0.01727	-0.26175	0.57121	4.13825	-0.56427
43/ 52/ 33 (C)	0.18109	-0.03453	0.17747	-1.14257	4.09042	1.09193
43/ 52/ 34 (C)	0.18141	0.03454	-0.01858	1.14241	-2.21100	-1.12853
43/ 52/ 35 (C)	0.05033	0.01417	-0.05521	0.01652	-0.10072	-0.17787
43/ 52/ 36 (C)	-0.07697	-0.01087	-0.05521	0.01652	-0.15545	0.07164
43/ 52/ 37 (C)	0.16154	-0.03453	0.27420	-1.14257	5.25467	1.09190
43/ 52/ 38 (C)	0.16185	0.03454	0.07818	1.14241	-1.04675	-1.12853
43/ 52/ 39 (C)	0.04394	0.01417	-0.00908	0.01652	0.45883	-0.17787
43/ 52/ 40 (C)	-0.08335	-0.01087	-0.00908	0.01652	0.40517	0.07164
44/ 52/ 1	-0.01457	0.00000	0.01613	-0.00000	-0.22549	0.00000
44/ 52/ 2	-2.19508	-0.00000	-8.43014	0.00000	100.60598	-0.00000
44/ 52/ 3	-2.19508	-0.00000	-8.43014	0.00000	100.60598	-0.00000
44/ 52/ 4	-2.19508	-0.00000	-8.43014	0.00000	100.60598	-0.00000
44/ 52/ 5	6.10214	0.00000	-0.00000	0.00000	4.74584	5.91456
44/ 52/ 6	1.13707	-0.32581	-1.63458	-8.95988	50.19119	-14.86874
44/ 52/ 7	8.43014	1.11282	19.00349	11.12192	-610.87508	35.77210
44/ 52/ 8	42.86279	-8.43014	-0.00000	0.00000	18.42831	-84.01489
44/ 52/ 9 (C)	-0.00798	0.00000	0.04142	-0.00000	-0.52730	0.00000
44/ 52/ 10 (C)	0.04390	0.00000	0.16860	-0.00000	-2.01212	0.00000
44/ 52/ 11 (C)	0.14459	-0.00000	-0.13345	0.00000	1.73207	0.17383
44/ 52/ 12 (C)	-0.00133	-0.00958	-0.18149	-0.26333	3.06771	-0.43693
44/ 52/ 13 (C)	0.09001	-0.01770	-0.00000	0.00000	0.03870	-0.17643

Bar/Node/Case	FX (kip)	FY (kip)	FZ (kip)	MX (kip-in)	MY (kip-in)	MZ (kip-in)
44/ 52/ 14 (C)	0.01770	0.00234	0.03991	0.02338	-1.28284	0.07512
44/ 52/ 15 (C)	-0.00798	0.00000	0.04142	-0.00000	-0.52730	0.00000
44/ 52/ 16 (C)	0.03592	0.00000	0.21003	-0.00000	-2.53942	0.00000
44/ 52/ 17 (C)	0.13661	-0.00000	-0.09202	0.00000	1.20477	0.17383
44/ 52/ 18 (C)	-0.00931	-0.00958	-0.14007	-0.26333	2.54041	-0.43693
44/ 52/ 19 (C)	0.08203	-0.01770	0.04142	-0.00000	-0.48860	-0.17643
44/ 52/ 20 (C)	0.00972	0.00234	0.08133	0.02338	-1.81014	0.07512
44/ 52/ 21 (C)	0.13339	0.00000	0.06779	-0.00000	-0.73734	0.13037
44/ 52/ 22 (C)	0.02394	-0.00718	0.03176	-0.19750	0.26439	-0.32770
44/ 52/ 23 (C)	0.07220	-0.00929	0.16788	-0.00000	-2.01608	-0.09263
44/ 52/ 24 (C)	0.04424	0.00123	0.18883	0.01225	-2.70988	0.03944
44/ 52/ 25 (C)	0.13980	-0.00000	-0.10859	0.00000	1.41569	0.17383
44/ 52/ 26 (C)	-0.00612	-0.00958	-0.15663	-0.26333	2.75133	-0.43693
44/ 52/ 27 (C)	0.05822	0.01239	0.02485	-0.00000	-0.28929	-0.12350
44/ 52/ 28 (C)	0.00760	0.00164	0.05279	0.01635	-1.21437	0.05258
44/ 52/ 29 (C)	-0.01118	0.00000	0.05799	-0.00000	-0.73823	0.00000
44/ 52/ 30 (C)	0.01237	0.00000	0.13401	-0.00000	-1.63882	0.00000
44/ 52/ 31 (C)	0.17634	0.00000	0.21271	-0.00000	-2.46650	0.13906
44/ 52/ 32 (C)	0.05960	-0.00766	0.17428	-0.21065	-1.39799	-0.34955
44/ 52/ 33 (C)	0.24372	-0.00000	-0.07951	0.00000	1.13249	0.27813
44/ 52/ 34 (C)	0.01024	-0.01532	-0.15637	-0.42133	3.26951	-0.69909
44/ 52/ 35 (C)	0.08921	-0.01770	0.08343	-0.00000	-0.99649	-0.17643
44/ 52/ 36 (C)	0.01690	0.00234	0.12334	0.02338	-2.31803	0.07512
44/ 52/ 37 (C)	0.22416	-0.00000	-0.17624	0.00000	2.29674	0.27813
44/ 52/ 38 (C)	-0.00931	-0.01532	-0.25310	-0.42133	4.43377	-0.69909
44/ 52/ 39 (C)	0.08283	-0.01770	0.03728	-0.00000	-0.43587	-0.17643
44/ 52/ 40 (C)	0.01052	0.00234	0.07719	0.02338	-1.75741	0.07512
44/ 53/ 1	-0.01457	0.00000	-0.01613	-0.00000	-0.22549	-0.00000
44/ 53/ 2	-2.19508	-0.00000	8.43014	0.00000	100.60598	0.00000
44/ 53/ 3	-2.19508	-0.00000	8.43014	0.00000	100.60598	0.00000
44/ 53/ 4	-2.19508	-0.00000	8.43014	0.00000	100.60598	0.00000
44/ 53/ 5	6.10214	0.00000	-0.00000	0.00000	4.74584	5.91456
44/ 53/ 6	1.13707	-0.32581	-1.53458	-8.95998	-54.89758	6.06011
44/ 53/ 7	-8.43014	1.11282	19.00349	11.12192	610.87508	-35.77210
44/ 53/ 8	42.86279	8.43014	-0.00000	0.00000	18.42831	-84.01499
44/ 53/ 9 (C)	-0.00798	0.00000	-0.04142	-0.00000	-0.52730	-0.00000

Bar/Node/Case	FX (kip)	FY (kip)	FZ (kip)	MX (kip-in)	MY (kip-in)	MZ (kip-in)
44/ 53/ 10 (C)	0.04390	0.00000	-0.16860	-0.00000	-2.01212	-0.00000
44/ 53/ 11 (C)	0.14459	-0.00000	0.13345	0.00000	1.73207	0.17383
44/ 53/ 12 (C)	-0.00133	-0.00958	0.08541	-0.26333	-0.02085	0.17869
44/ 53/ 13 (C)	0.09001	0.01770	-0.00000	0.00000	0.03870	-0.17643
44/ 53/ 14 (C)	-0.01770	0.00234	0.03991	0.02338	1.28284	-0.07512
44/ 53/ 15 (C)	-0.00798	0.00000	-0.04142	-0.00000	-0.52730	-0.00000
44/ 53/ 16 (C)	0.03592	0.00000	-0.21003	-0.00000	-2.53942	-0.00000
44/ 53/ 17 (C)	0.13661	-0.00000	0.09202	0.00000	1.20477	0.17383
44/ 53/ 18 (C)	-0.00931	-0.00958	0.04398	-0.26333	-0.54815	0.17869
44/ 53/ 19 (C)	0.08203	0.01770	-0.04142	-0.00000	-0.48860	-0.17643
44/ 53/ 20 (C)	-0.02569	0.00234	-0.00152	0.02338	0.75553	-0.07512
44/ 53/ 21 (C)	0.13339	0.00000	-0.06779	-0.00000	-0.73734	0.13037
44/ 53/ 22 (C)	0.02394	-0.00718	-0.10382	-0.19750	-2.05203	0.13402
44/ 53/ 23 (C)	0.07220	0.00929	-0.16788	-0.00000	-2.01608	-0.09263
44/ 53/ 24 (C)	0.01565	0.00123	-0.14693	0.01226	-1.36290	-0.03944
44/ 53/ 25 (C)	0.13980	-0.00000	0.10859	0.00000	1.41569	0.17383
44/ 53/ 26 (C)	-0.00612	-0.00958	0.06055	-0.26333	-0.33723	0.17869
44/ 53/ 27 (C)	0.05822	0.01239	-0.02485	-0.00000	-0.28929	-0.12350
44/ 53/ 28 (C)	-0.01718	0.00164	0.00308	0.01635	0.58160	-0.05258
44/ 53/ 29 (C)	-0.01118	0.00000	-0.05799	-0.00000	-0.73823	-0.00000
44/ 53/ 30 (C)	0.01237	0.00000	-0.13401	-0.00000	-1.63882	-0.00000
44/ 53/ 31 (C)	0.17634	0.00000	-0.21271	-0.00000	-2.46650	0.13906
44/ 53/ 32 (C)	0.05960	-0.00766	-0.25115	-0.21065	-3.85883	0.14296
44/ 53/ 33 (C)	0.24372	-0.00000	0.07951	0.00000	1.13249	0.27813
44/ 53/ 34 (C)	0.01024	-0.01532	0.00264	-0.42133	-1.67218	0.28591
44/ 53/ 35 (C)	0.08921	0.01770	-0.08343	-0.00000	-0.99649	-0.17643
44/ 53/ 36 (C)	-0.01850	0.00234	-0.04352	0.02338	0.24755	-0.07512
44/ 53/ 37 (C)	0.22416	-0.00000	0.17624	0.00000	2.29674	0.27813
44/ 53/ 38 (C)	-0.00931	-0.01532	0.09937	-0.42133	-0.50793	0.28591
44/ 53/ 39 (C)	0.08283	0.01770	-0.03728	-0.00000	-0.43587	-0.17643
44/ 53/ 40 (C)	-0.02489	0.00234	0.00253	0.02338	0.80826	-0.07512
45/ 53/ 1	-0.01457	0.00000	0.01613	0.00000	-0.22549	0.00000
45/ 53/ 2	-2.19508	-0.00000	-8.43014	-0.00000	100.60598	-0.00000
45/ 53/ 3	-2.19508	-0.00000	-8.43014	-0.00000	100.60598	-0.00000
45/ 53/ 4	-2.19508	-0.00000	-8.43014	-0.00000	100.60598	-0.00000
45/ 53/ 5	4.77037	0.73434	-2.08328	24.29770	67.64840	23.21996

Bar/Node/Case	FX (kip)	FY (kip)	FZ (kip)	MX (kip-in)	MY (kip-in)	MZ (kip-in)
45/ 53/ 6	-2.34851	0.48314	-0.91322	-14.60830	28.59691	-15.14411
45/ 53/ 7	38.26958	-5.17412	13.43750	7.86438	-418.92313	-34.11281
45/ 53/ 8	24.34756	6.74789	-13.43750	-7.86438	444.98470	-84.70219
45/ 53/ 9 (C)	-0.00798	0.00000	0.04142	0.00000	-0.52730	0.00000
45/ 53/ 10 (C)	0.04390	0.00000	0.16860	0.00000	-2.01212	0.00000
45/ 53/ 11 (C)	0.10545	0.02158	-0.19468	0.71411	3.58078	0.68243
45/ 53/ 12 (C)	-0.10377	-0.01420	-0.16029	-0.42928	2.43306	-0.44509
45/ 53/ 13 (C)	0.05113	-0.01417	-0.02822	-0.01652	0.93447	-0.17787
45/ 53/ 14 (C)	0.07617	-0.01087	0.02822	0.01652	-0.87974	-0.07164
45/ 53/ 15 (C)	-0.00798	0.00000	0.04142	0.00000	-0.52730	0.00000
45/ 53/ 16 (C)	0.03592	0.00000	0.21003	0.00000	-2.53942	0.00000
45/ 53/ 17 (C)	0.09747	0.02158	-0.15325	0.71411	3.05348	0.68243
45/ 53/ 18 (C)	-0.11178	-0.01420	-0.11886	-0.42928	1.90575	-0.44509
45/ 53/ 19 (C)	0.04315	-0.01417	0.01321	-0.01652	0.40716	-0.17787
45/ 53/ 20 (C)	0.06818	-0.01087	0.06964	0.01652	-1.40704	-0.07164
45/ 53/ 21 (C)	0.10403	0.01619	0.02187	0.53558	3.64919	0.51183
45/ 53/ 22 (C)	-0.05289	-0.01085	0.34766	-0.32196	-2.21160	-0.33381
45/ 53/ 23 (C)	0.05178	-0.00744	0.15306	-0.00867	-1.54580	-0.09338
45/ 53/ 24 (C)	0.06493	-0.00570	0.18269	0.00867	-2.49826	-0.03761
45/ 53/ 25 (C)	0.10066	0.02158	-0.16982	0.71411	3.26440	0.68243
45/ 53/ 26 (C)	-0.10856	-0.01420	-0.13543	-0.42928	2.11667	-0.44509
45/ 53/ 27 (C)	0.03100	-0.00992	0.00510	-0.01156	0.33775	-0.12451
45/ 53/ 28 (C)	0.04853	-0.00761	0.04461	0.01156	-0.93220	0.05015
45/ 53/ 29 (C)	-0.01118	0.00000	0.05799	0.00000	-0.73823	0.00000
45/ 53/ 30 (C)	0.01237	0.00000	0.13401	0.00000	-1.63882	0.00000
45/ 53/ 31 (C)	0.14502	0.01727	0.16373	0.57129	-3.98753	0.54595
45/ 53/ 32 (C)	-0.02236	-0.01136	0.19124	-0.34342	-1.59571	-0.35607
45/ 53/ 33 (C)	0.18109	0.03453	-0.17747	1.14257	4.09042	1.09190
45/ 53/ 34 (C)	-0.15366	-0.02272	-0.12245	-0.68585	2.25407	-0.71214
45/ 53/ 35 (C)	0.05033	-0.01417	0.05521	-0.01652	-0.10072	-0.17787
45/ 53/ 36 (C)	0.07536	-0.01087	0.11165	0.01652	-1.91493	-0.07154
45/ 53/ 37 (C)	0.16154	0.03453	-0.27420	1.14257	5.25467	1.09190
45/ 53/ 38 (C)	-0.17322	-0.02272	-0.21918	-0.68585	3.41832	-0.71214
45/ 53/ 39 (C)	0.04394	-0.01417	0.00506	-0.01652	0.45989	-0.17787
45/ 53/ 40 (C)	0.06898	-0.01087	0.06550	0.01652	-1.35431	-0.07164
45/ 54/ 1	-0.01457	0.00000	-0.01613	0.00000	-0.22549	-0.00000

Bar/Node/Case	FX (kip)	FY (kip)	FZ (kip)	MX (kip-in)	MY (kip-in)	MZ (kip-in)
45/ 54/ 2	-2.19508	-0.00000	8.43014	-0.00000	100.60598	0.00000
45/ 54/ 3	-2.19508	-0.00000	8.43014	-0.00000	100.60598	0.00000
45/ 54/ 4	-2.19508	-0.00000	8.43014	-0.00000	100.60598	0.00000
45/ 54/ 5	4.77037	0.73434	-2.08328	24.29770	-66.28834	-23.99168
45/ 54/ 6	-2.34851	-0.48314	-0.91322	-14.60830	-30.11448	15.91724
45/ 54/ 7	24.34756	6.74789	13.43750	7.86438	444.98470	-84.70219
45/ 54/ 8	38.26958	5.17412	-13.43750	-7.86438	-418.92313	-34.11281
45/ 54/ 9 (C)	-0.00798	0.00000	-0.04142	0.00000	-0.52730	-0.00000
45/ 54/ 10 (C)	0.04390	0.00000	-0.16860	0.00000	-2.01212	-0.00000
45/ 54/ 11 (C)	0.10545	0.02158	0.07222	0.71411	-0.35562	-0.70512
45/ 54/ 12 (C)	-0.10377	-0.01420	0.10661	-0.42928	0.70753	0.46781
45/ 54/ 13 (C)	0.07617	0.01087	-0.02822	-0.01652	-0.87974	-0.07164
45/ 54/ 14 (C)	0.05113	0.01417	0.02822	0.01652	0.93447	-0.17787
45/ 54/ 15 (C)	-0.00798	0.00000	-0.04142	0.00000	-0.52730	-0.00000
45/ 54/ 16 (C)	0.03592	0.00000	-0.21003	0.00000	-2.53942	-0.00000
45/ 54/ 17 (C)	0.09747	0.02158	0.03088	0.71411	-0.88293	-0.70512
45/ 54/ 18 (C)	-0.11176	-0.01420	0.06519	-0.42928	0.18022	0.46781
45/ 54/ 19 (C)	0.06818	0.01087	-0.06964	-0.01652	-1.40704	-0.07164
45/ 54/ 20 (C)	0.04315	0.01417	-0.01321	0.01652	0.40716	-0.17787
45/ 54/ 21 (C)	0.10403	0.01619	-0.11371	0.53558	-2.30311	-0.52884
45/ 54/ 22 (C)	-0.05289	-0.01085	-0.08792	-0.32196	-1.50575	0.35066
45/ 54/ 23 (C)	0.06493	0.00570	-0.18269	-0.00867	-2.49826	-0.03761
45/ 54/ 24 (C)	0.05178	0.00744	-0.15306	0.00867	-1.54580	-0.09338
45/ 54/ 25 (C)	0.10066	0.02158	0.04737	0.71411	-0.67200	-0.70512
45/ 54/ 26 (C)	-0.10856	-0.01420	0.08175	-0.42928	0.39115	0.46781
45/ 54/ 27 (C)	0.04853	0.00761	-0.04461	-0.01156	-0.93220	-0.05015
45/ 54/ 28 (C)	0.03100	0.00992	-0.00510	0.01156	0.33775	-0.12451
45/ 54/ 29 (C)	-0.01118	0.00000	-0.05799	0.00000	-0.73823	-0.00000
45/ 54/ 30 (C)	0.01237	0.00000	-0.13401	0.00000	-1.63882	-0.00000
45/ 54/ 31 (C)	0.14502	0.01727	-0.26170	0.57129	-4.13665	-0.56409
45/ 54/ 32 (C)	-0.02236	-0.01136	-0.23419	-0.34342	-3.26613	0.37425
45/ 54/ 33 (C)	0.18109	0.03453	-0.01846	1.14257	-2.20782	-1.12818
45/ 54/ 34 (C)	-0.15366	-0.02272	0.03656	-0.68585	-0.50678	0.74849
45/ 54/ 35 (C)	0.07536	0.01087	-0.11165	-0.01652	-1.91493	-0.07154
45/ 54/ 36 (C)	0.05033	0.01417	-0.05521	0.01652	-0.10072	-0.17787
45/ 54/ 37 (C)	0.16154	0.03453	0.07827	1.14257	-1.04357	-1.12818

Bar/Node/Case	FX (kip)	FY (kip)	FZ (kip)	MX (kip-in)	MY (kip-in)	MZ (kip-in)
45/ 54/ 38 (C)	-0.17322	-0.02272	0.13329	-0.68685	0.65747	0.74849
45/ 54/ 39 (C)	0.08898	0.01087	-0.06551	-0.01652	-1.35431	-0.07164
45/ 54/ 40 (C)	0.04394	0.01417	-0.00008	0.01652	0.45080	-0.17787
46/ 54/ 1	-0.01457	0.00000	0.01613	-0.00000	-0.22549	0.00000
46/ 54/ 2	-2.19508	-0.00000	-8.43014	0.00000	100.60598	-0.00000
46/ 54/ 3	-2.19508	-0.00000	-8.43014	0.00000	100.60598	-0.00000
46/ 54/ 4	-2.19508	-0.00000	-8.43014	0.00000	100.60598	-0.00000
46/ 54/ 5	1.13707	-0.32611	-1.63135	-8.95495	50.08727	-14.87618
46/ 54/ 6	-3.52864	-0.00000	0.00000	-0.00000	-0.19359	2.87308
46/ 54/ 7	42.86279	-8.43014	-0.00000	0.00000	18.42831	-84.01489
46/ 54/ 8	-8.43014	-1.11282	-19.00349	-11.12192	610.87508	-35.77210
46/ 54/ 9 (C)	-0.00798	0.00000	0.04142	-0.00000	-0.52730	0.00000
46/ 54/ 10 (C)	0.04390	0.00000	0.16860	-0.00000	-2.01212	0.00000
46/ 54/ 11 (C)	-0.00133	-0.00958	0.18139	-0.26319	3.08466	-0.43721
46/ 54/ 12 (C)	-0.13845	-0.00000	-0.13345	0.00000	1.58690	0.08444
46/ 54/ 13 (C)	-0.01770	-0.00234	-0.03991	0.02336	1.28284	-0.07512
46/ 54/ 14 (C)	0.09001	-0.01770	-0.00000	0.00000	0.03870	-0.17643
46/ 54/ 15 (C)	-0.00798	0.00000	0.04142	-0.00000	-0.52730	0.00000
46/ 54/ 16 (C)	0.03592	0.00000	0.21003	0.00000	2.53942	0.00000
46/ 54/ 17 (C)	-0.00931	-0.00958	-0.13997	-0.26319	2.53735	-0.43721
46/ 54/ 18 (C)	-0.14644	-0.00000	-0.09202	0.00000	1.05960	0.08444
46/ 54/ 19 (C)	-0.02569	-0.00234	0.00152	-0.02336	0.75553	-0.07512
46/ 54/ 20 (C)	0.08203	-0.01770	0.04142	-0.00000	-0.48860	-0.17643
46/ 54/ 21 (C)	0.02394	-0.00719	0.03183	-0.19739	0.26210	-0.32791
46/ 54/ 22 (C)	-0.07890	0.00000	0.06779	-0.00000	-0.84622	0.06333
46/ 54/ 23 (C)	0.01585	-0.00123	0.14893	-0.01226	-1.35290	-0.03944
46/ 54/ 24 (C)	0.07220	-0.00929	0.16788	-0.00000	-2.01608	-0.09263
46/ 54/ 25 (C)	-0.00612	-0.00958	-0.15654	-0.26319	2.74828	-0.43721
46/ 54/ 26 (C)	-0.14325	-0.00000	-0.10859	0.00000	1.27052	0.08444
46/ 54/ 27 (C)	-0.01718	-0.00164	-0.00308	0.01635	0.58160	-0.05258
46/ 54/ 28 (C)	0.05822	-0.01239	0.02489	-0.00000	-0.28929	-0.12350
46/ 54/ 29 (C)	-0.01118	0.00000	0.05799	-0.00000	-0.73823	0.00000
46/ 54/ 30 (C)	0.01237	0.00000	0.13401	-0.00000	-1.63882	0.00000
46/ 54/ 31 (C)	0.05960	-0.00787	0.17438	-0.21055	-1.40043	-0.34977
46/ 54/ 32 (C)	-0.05010	0.00000	0.21277	-0.00000	-2.58253	0.06755
46/ 54/ 33 (C)	0.01024	-0.01533	0.15622	0.42110	3.26463	-0.59954

Bar/Node/Case	FX (kip)	FY (kip)	FZ (kip)	MX (kip-in)	MY (kip-in)	MZ (kip-in)
46/ 54/ 34 (C)	-0.20916	-0.00000	-0.07951	0.00000	0.90022	0.13510
46/ 54/ 35 (C)	-0.01850	-0.00234	0.04352	-0.02336	0.24765	-0.07512
46/ 54/ 36 (C)	0.08921	-0.01770	0.08343	-0.00000	-0.96649	-0.17643
46/ 54/ 37 (C)	-0.00931	-0.01533	-0.25295	-0.42110	4.42888	-0.89954
46/ 54/ 38 (C)	-0.22871	-0.00000	-0.17624	0.00000	2.06447	0.13510
46/ 54/ 39 (C)	-0.02489	-0.00234	-0.00263	-0.02336	0.80826	-0.07512
46/ 54/ 40 (C)	0.08283	-0.01770	0.03728	-0.00000	-0.43587	-0.17643
46/ 55/ 1	-0.01457	0.00000	0.01613	-0.00000	-0.22549	-0.00000
46/ 55/ 2	-2.19508	-0.00000	8.43014	0.00000	100.60598	0.00000
46/ 55/ 3	-2.19508	-0.00000	8.43014	0.00000	100.60598	0.00000
46/ 55/ 4	-2.19508	-0.00000	8.43014	0.00000	100.60598	0.00000
46/ 55/ 5	1.13707	-0.32611	-1.63135	-8.95495	-54.76367	6.08954
46/ 55/ 6	-3.52864	-0.00000	0.00000	-0.00000	-0.10358	2.87308
46/ 55/ 7	42.86279	8.43014	-0.00000	0.00000	18.42831	-84.01489
46/ 55/ 8	8.43014	-1.11282	-19.00349	-11.12192	-610.87508	35.77210
46/ 55/ 9 (C)	-0.00798	0.00000	-0.04142	-0.00000	-0.52730	-0.00000
46/ 55/ 10 (C)	0.04390	0.00000	-0.16860	-0.00000	-2.01212	-0.00000
46/ 55/ 11 (C)	-0.00133	-0.00958	0.08550	-0.26319	-0.01779	0.17897
46/ 55/ 12 (C)	-0.13845	-0.00000	0.13345	0.00000	1.58690	0.08444
46/ 55/ 13 (C)	0.01770	-0.00234	-0.03591	-0.02336	-1.28284	0.07512
46/ 55/ 14 (C)	0.09001	0.01770	-0.00000	0.00000	0.03870	-0.17643
46/ 55/ 15 (C)	-0.00798	0.00000	-0.04142	-0.00000	-0.52730	-0.00000
46/ 55/ 16 (C)	0.03592	0.00000	-0.21003	-0.00000	-2.53942	-0.00000
46/ 55/ 17 (C)	-0.00931	-0.00958	0.04408	-0.26319	-0.54510	0.17897
46/ 55/ 18 (C)	-0.14644	-0.00000	0.09202	0.00000	1.05963	0.08444
46/ 55/ 19 (C)	0.00972	-0.00234	-0.08133	-0.02336	-1.81014	0.07512
46/ 55/ 20 (C)	0.08203	0.01770	-0.04142	-0.00000	-0.48863	-0.17643
46/ 55/ 21 (C)	0.02394	-0.00719	-0.10375	-0.19739	-2.04974	0.13473
46/ 55/ 22 (C)	-0.07890	0.00000	-0.06779	-0.00000	-0.84622	0.06333
46/ 55/ 23 (C)	0.00424	-0.00123	-0.18883	-0.01226	-2.70988	0.03944
46/ 55/ 24 (C)	0.07220	0.00929	-0.16788	-0.00000	-2.01608	-0.09263
46/ 55/ 25 (C)	-0.00612	-0.00958	0.06065	-0.26319	-0.33418	0.17897
46/ 55/ 26 (C)	-0.14325	-0.00000	0.10859	0.00000	1.27052	0.08444
46/ 55/ 27 (C)	0.00760	-0.00164	-0.05279	-0.01635	-1.21437	0.05258
46/ 55/ 28 (C)	0.05822	0.01239	-0.02485	-0.00000	-0.28929	-0.12350
46/ 55/ 29 (C)	-0.01118	0.00000	-0.05799	-0.00000	-0.73823	-0.00000

Bar/Node/Case	FX (kip)	FY (kip)	FZ (kip)	MX (kip-in)	MY (kip-in)	MZ (kip-in)
46/ 55/ 30 (C)	0.01237	0.00000	-0.13401	-0.00000	-1.63882	-0.00000
46/ 55/ 31 (C)	0.05960	-0.00787	-0.25107	-0.21055	-3.86639	0.14318
46/ 55/ 32 (C)	-0.05010	0.00000	-0.21277	-0.00000	-2.58253	0.06755
46/ 55/ 33 (C)	0.01024	-0.01533	0.00280	-0.42110	-1.68729	0.28635
46/ 55/ 34 (C)	-0.20916	-0.00000	0.07951	0.00000	0.90022	0.13510
46/ 55/ 35 (C)	0.01690	-0.00234	-0.12334	-0.02336	-2.31803	0.07512
46/ 55/ 36 (C)	0.08921	0.01770	-0.08343	-0.00000	-0.99649	-0.17643
46/ 55/ 37 (C)	-0.00931	-0.01533	0.09952	-0.42110	-0.50304	0.28635
46/ 55/ 38 (C)	-0.22871	-0.00000	0.17624	0.00000	2.06447	0.13510
46/ 55/ 39 (C)	0.01052	-0.00234	-0.07719	-0.02336	-1.75741	0.07512
46/ 55/ 40 (C)	0.08283	0.01770	-0.03728	-0.00000	-0.43587	-0.17643
47/ 55/ 1	-0.01457	0.00000	0.01613	0.00000	-0.22549	0.00000
47/ 55/ 2	-2.19508	-0.00000	-8.43014	0.00000	100.60598	0.00000
47/ 55/ 3	-2.19508	-0.00000	-8.43014	-0.00000	100.60598	-0.00000
47/ 55/ 4	-2.19508	-0.00000	-8.43014	-0.00000	100.60598	-0.00000
47/ 55/ 5	-2.34181	-0.48335	-0.91093	-14.60283	28.52919	-15.15149
47/ 55/ 6	-2.34851	0.48314	0.91322	14.60630	-30.11448	15.91724
47/ 55/ 7	24.34756	-6.74789	-13.43750	-7.86438	444.98470	-84.70219
47/ 55/ 8	-36.26958	5.17412	-13.43750	7.86438	418.92313	34.11281
47/ 56/ 9 (C)	-0.00798	0.00000	0.04142	0.00000	-0.52730	0.00000
47/ 56/ 10 (C)	0.04390	0.00000	0.16860	0.00000	-2.01212	0.00000
47/ 56/ 11 (C)	-0.10357	-0.01421	-0.16022	-0.42918	2.43107	-0.44530
47/ 56/ 12 (C)	-0.10377	0.01420	-0.10661	0.42928	0.70753	0.46781
47/ 56/ 13 (C)	-0.05113	0.01087	-0.02822	-0.01652	0.87974	0.07164
47/ 56/ 14 (C)	0.05113	-0.01417	-0.02822	-0.01652	0.93447	-0.17787
47/ 56/ 15 (C)	-0.00798	0.00000	0.04142	0.00000	-0.52730	0.00000
47/ 56/ 16 (C)	0.03592	0.00000	0.21003	0.00000	-2.53942	0.00000
47/ 56/ 17 (C)	-0.11156	-0.01421	-0.11880	-0.42918	1.90376	-0.44530
47/ 56/ 18 (C)	-0.11178	0.01420	-0.06519	0.42929	0.18022	0.46781
47/ 56/ 19 (C)	0.08415	0.01087	0.01321	-0.01652	0.35243	0.07164
47/ 56/ 20 (C)	0.04315	-0.01417	0.01321	-0.01652	0.40716	-0.17787
47/ 56/ 21 (C)	-0.05274	-0.01065	0.04771	-0.32188	-0.21309	0.33398
47/ 56/ 22 (C)	-0.05289	0.01065	0.08792	0.32196	-1.50575	0.35086
47/ 56/ 23 (C)	-0.01505	0.00570	0.15306	-0.00867	-1.57453	0.03751
47/ 56/ 24 (C)	0.05178	-0.00744	0.15306	-0.00867	-1.54580	-0.09338
47/ 56/ 25 (C)	-0.10936	-0.01421	-0.13537	-0.42918	2.11468	-0.44530

Bar/Node/Case	FX (kip)	FY (kip)	FZ (kip)	MX (kip-in)	MY (kip-in)	MZ (kip-in)
47/ 56/ 26 (C)	-0.10856	0.01420	-0.08175	0.42928	0.30115	0.46781
47/ 56/ 27 (C)	-0.05811	0.00791	0.00510	-0.01156	0.29943	0.05015
47/ 56/ 28 (C)	0.05100	-0.00992	0.00510	-0.01156	0.33775	-0.12451
47/ 56/ 29 (C)	-0.01118	0.00000	0.05799	0.00000	-0.73823	0.00000
47/ 56/ 30 (C)	0.01237	0.00000	0.13401	0.00000	-1.63882	0.00000
47/ 56/ 31 (C)	-0.02201	-0.01136	0.19130	-0.34334	-1.90730	-0.35624
47/ 56/ 32 (C)	-0.02236	0.01136	0.23419	0.34342	-3.28813	0.37425
47/ 56/ 33 (C)	-0.15335	-0.02273	-0.12234	-0.88668	2.25088	-0.71248
47/ 56/ 34 (C)	-0.15366	0.02272	-0.03666	0.88685	-0.50878	0.74849
47/ 56/ 35 (C)	-0.07697	0.01087	0.05521	-0.01652	-0.15545	0.07164
47/ 56/ 36 (C)	0.05033	-0.01417	0.05521	-0.01652	-0.10072	-0.17787
47/ 56/ 37 (C)	-0.17290	-0.02273	0.21907	-0.88668	3.41513	-0.71248
47/ 56/ 38 (C)	-0.17322	0.02272	-0.13329	0.88685	0.65747	0.74849
47/ 56/ 39 (C)	-0.08335	0.01087	0.00906	-0.01652	0.40517	0.07164
47/ 56/ 40 (C)	0.04394	-0.01417	0.00906	-0.01652	0.45989	-0.17787
47/ 56/ 1	-0.01457	0.00000	-0.01613	0.00000	-0.22549	-0.00000
47/ 56/ 2	-2.19508	-0.00000	8.43014	-0.00000	100.60598	0.00000
47/ 56/ 3	-2.19508	-0.00000	8.43014	-0.00000	100.60598	0.00000
47/ 56/ 4	-2.19508	-0.00000	8.43014	-0.00000	100.60598	0.00000
47/ 56/ 5	-2.34181	-0.48335	-0.51093	-14.60283	-30.03525	15.92321
47/ 56/ 6	-2.34851	0.48314	0.51322	14.60630	28.59691	-15.14411
47/ 56/ 7	36.26958	5.17412	-13.43750	-7.86438	-418.92313	-34.11281
47/ 56/ 8	-24.34756	-6.74789	-13.43750	-7.86438	-444.98470	84.70219
47/ 56/ 9 (C)	-0.00798	0.00000	-0.04142	0.00000	-0.52730	-0.00000
47/ 56/ 10 (C)	0.04390	0.00000	-0.16860	0.00000	-2.01212	-0.00000
47/ 56/ 11 (C)	-0.10357	-0.01421	0.10668	-0.42918	0.70986	0.46798
47/ 56/ 12 (C)	-0.10377	0.01420	0.16029	0.42928	2.43306	-0.44509
47/ 56/ 13 (C)	-0.05113	-0.01417	-0.02822	-0.01652	-0.93447	0.17787
47/ 56/ 14 (C)	0.05113	0.01087	-0.02822	-0.01652	-0.87374	-0.07164
47/ 56/ 15 (C)	-0.00798	0.00000	-0.04142	0.00000	-0.52730	-0.00000
47/ 56/ 16 (C)	0.03592	0.00000	-0.21003	0.00000	-2.53942	-0.00000
47/ 56/ 17 (C)	-0.11156	-0.01421	0.06525	-0.42918	0.18255	0.46798
47/ 56/ 18 (C)	-0.11178	0.01420	0.11886	0.42928	1.90575	-0.44509
47/ 56/ 19 (C)	-0.05911	-0.01417	-0.06984	-0.01652	-1.46177	0.17787
47/ 56/ 20 (C)	0.08818	0.01087	-0.06984	-0.01652	-1.40704	-0.07164
47/ 56/ 21 (C)	-0.05274	-0.01065	-0.08787	-0.32188	-1.50400	0.35099

Bar/Node/Case	FX (kip)	FY (kip)	FZ (kip)	MX (kip-in)	MY (kip-in)	MZ (kip-in)
47/ 56/ 22 (C)	-0.05289	0.01085	-0.04768	0.32198	-0.21160	-0.33381
47/ 56/ 23 (C)	-0.00190	-0.00744	-0.18269	-0.00867	-2.52699	0.09338
47/ 56/ 24 (C)	0.06493	0.00570	-0.18269	-0.00867	-2.49826	-0.03761
47/ 56/ 25 (C)	-0.10835	-0.01421	0.08182	-0.42918	0.39347	0.46798
47/ 56/ 26 (C)	-0.10858	0.01420	0.13543	0.42928	2.11667	-0.44509
47/ 56/ 27 (C)	-0.04058	-0.00992	-0.04461	-0.01156	-0.97051	0.12451
47/ 56/ 28 (C)	0.04853	0.00761	-0.04461	-0.01156	-0.93220	-0.05015
47/ 56/ 29 (C)	-0.01118	0.00000	-0.05799	0.00000	-0.73823	-0.00000
47/ 56/ 30 (C)	0.01237	0.00000	-0.13401	0.00000	-1.63882	-0.00000
47/ 56/ 31 (C)	-0.02220	-0.01136	-0.23413	-0.34334	-3.28427	0.37439
47/ 56/ 32 (C)	-0.02236	0.01136	-0.19124	0.34342	-1.90571	-0.35607
47/ 56/ 33 (C)	-0.15335	-0.02273	0.03667	-0.68668	-0.50305	0.74877
47/ 56/ 34 (C)	-0.15365	0.02272	0.12245	0.68685	2.25407	-0.71214
47/ 56/ 35 (C)	-0.05193	-0.01417	-0.11165	-0.01652	-1.96966	0.17787
47/ 56/ 36 (C)	0.07535	0.01087	-0.11165	-0.01652	-1.91493	-0.07164
47/ 56/ 37 (C)	-0.17290	-0.02273	0.13340	-0.68668	0.66120	0.74877
47/ 56/ 38 (C)	-0.17322	0.02272	0.21918	0.68685	3.41832	-0.71214
47/ 56/ 39 (C)	-0.05832	-0.01417	-0.06550	-0.01652	-1.40904	0.17787
47/ 56/ 40 (C)	0.06898	0.01087	-0.06550	-0.01652	-1.35431	-0.07164
48/ 56/ 1	-0.01457	0.00000	0.01613	-0.00000	-0.22549	0.00000
48/ 56/ 2	-2.19508	-0.00000	-8.43014	0.00000	100.60598	-0.00000
48/ 56/ 3	-2.19508	-0.00000	-8.43014	0.00000	100.60598	-0.00000
48/ 56/ 4	-2.19508	-0.00000	-8.43014	0.00000	100.60598	-0.00000
48/ 56/ 5	-3.51917	-0.00000	0.00000	-0.00000	-0.18545	2.87208
48/ 56/ 6	1.13707	0.32581	1.63458	8.95986	-54.89758	6.68011
48/ 56/ 7	-8.43014	-1.11282	-19.00349	-11.12192	610.87508	-35.77210
48/ 56/ 8	-42.86279	8.43014	0.00000	-0.00000	-18.42831	84.01489
48/ 56/ 9 (C)	-0.00798	0.00000	0.04142	-0.00000	-0.52730	0.00000
48/ 56/ 10 (C)	0.04390	0.00000	0.16860	-0.00000	-2.01212	0.00000
48/ 56/ 11 (C)	-0.13818	-0.00000	-0.13345	0.00000	1.58714	0.08441
48/ 56/ 12 (C)	-0.00133	0.00958	-0.08541	0.26333	-0.02085	0.17859
48/ 56/ 13 (C)	-0.09001	0.01770	0.00000	-0.00000	-0.03870	0.17643
48/ 56/ 14 (C)	-0.01770	-0.00234	-0.03991	-0.02336	1.28284	-0.07512
48/ 56/ 15 (C)	-0.00798	0.00000	0.04142	-0.00000	-0.52730	0.00000
48/ 56/ 16 (C)	0.03592	0.00000	0.21003	-0.00000	-2.53942	0.00000
48/ 56/ 17 (C)	-0.14616	-0.00000	-0.09202	0.00000	1.05984	0.08441

Bar/Node/Case	FX (kip)	FY (kip)	FZ (kip)	MX (kip-in)	MY (kip-in)	MZ (kip-in)
48/ 56/ 18 (C)	-0.00931	0.00958	-0.04398	0.26333	-0.54815	0.17869
48/ 56/ 19 (C)	-0.09800	0.01770	0.04142	-0.00000	-0.56600	0.17643
48/ 56/ 20 (C)	-0.02569	-0.00234	0.00152	-0.02336	0.75553	-0.07512
48/ 56/ 21 (C)	-0.07869	0.00000	0.06779	-0.00000	-0.84604	0.06331
48/ 56/ 22 (C)	0.02394	0.00718	0.10382	0.19750	-2.05203	0.13402
48/ 56/ 23 (C)	-0.02231	0.00929	0.16788	-0.00000	-2.05671	0.09263
48/ 56/ 24 (C)	0.01565	-0.00123	0.14693	-0.01226	-1.36290	-0.03944
48/ 56/ 25 (C)	-0.14297	-0.00000	-0.10859	0.00000	1.27076	0.08441
48/ 56/ 26 (C)	-0.00612	0.00958	-0.06055	0.26333	-0.33723	0.17869
48/ 56/ 27 (C)	-0.06780	0.01239	0.02485	-0.00000	-0.34347	0.12350
48/ 56/ 28 (C)	-0.01718	-0.00164	-0.00308	-0.01635	0.58160	-0.05258
48/ 56/ 29 (C)	-0.01118	0.00000	0.05799	-0.00000	-0.73823	0.00000
48/ 56/ 30 (C)	0.01237	0.00000	0.13401	-0.00000	-1.63882	0.00000
48/ 56/ 31 (C)	-0.04988	0.00000	0.21271	-0.00000	-2.58244	0.06753
48/ 56/ 32 (C)	0.05960	0.00766	0.25115	0.21066	-3.86883	0.14296
48/ 56/ 33 (C)	-0.20871	-0.00000	-0.07951	0.00000	0.90060	0.13506
48/ 56/ 34 (C)	0.01024	0.01532	-0.00264	0.42133	-1.67218	0.28591
48/ 56/ 35 (C)	-0.09081	0.01770	0.08343	-0.00000	-1.07389	0.17643
48/ 56/ 36 (C)	-0.01850	-0.00234	0.04352	-0.02336	0.24765	-0.07512
48/ 56/ 37 (C)	-0.22827	-0.00000	-0.17624	0.00000	2.06485	0.13506
48/ 56/ 38 (C)	-0.00931	0.01532	-0.09937	0.42133	-0.50793	0.28591
48/ 56/ 39 (C)	-0.09120	0.01770	0.03728	-0.00000	-0.51327	0.17643
48/ 56/ 40 (C)	-0.02489	-0.00234	-0.00263	-0.02336	0.80826	-0.07512
48/ 49/ 1	-0.01457	0.00000	-0.01613	-0.00000	-0.22549	-0.00000
48/ 49/ 2	-2.19508	-0.00000	8.43014	0.00000	100.60598	0.00000
48/ 49/ 3	-2.19508	-0.00000	8.43014	0.00000	100.60598	0.00000
48/ 49/ 4	-2.19508	-0.00000	8.43014	0.00000	100.60598	0.00000
48/ 49/ 5	-3.51917	-0.00000	0.00000	-0.00000	-0.18545	2.87208
48/ 49/ 6	1.13707	0.32581	1.63458	8.95986	50.19119	-14.86674
48/ 49/ 7	8.43014	-1.11282	-19.00349	-11.12192	-610.87508	35.77210
48/ 49/ 8	-42.86279	-8.43014	0.00000	-0.00000	-18.42831	84.01489
48/ 49/ 9 (C)	-0.00798	0.00000	-0.04142	-0.00000	-0.52730	-0.00000
48/ 49/ 10 (C)	0.04390	0.00000	-0.16860	-0.00000	-2.01212	-0.00000
48/ 49/ 11 (C)	-0.13818	-0.00000	0.13345	0.00000	1.58714	0.08441
48/ 49/ 12 (C)	-0.00133	0.00958	0.18149	0.26333	3.06771	-0.43693
48/ 49/ 13 (C)	-0.09001	-0.01770	0.00000	-0.00000	-0.03870	0.17643

Bar/Node/Case	FX (kip)	FY (kip)	FZ (kip)	MX (kip-in)	MY (kip-in)	MZ (kip-in)
48/ 49/ 14 (C)	0.01770	0.00234	-0.03991	-0.02336	-1.28284	0.07512
48/ 49/ 15 (C)	-0.00798	0.00000	-0.04142	-0.00000	-0.52730	-0.00000
48/ 49/ 16 (C)	0.02592	0.00000	-0.21003	-0.00000	-2.53942	-0.00000
48/ 49/ 17 (C)	-0.14616	-0.00000	0.09202	0.00000	1.05984	0.08441
48/ 49/ 18 (C)	-0.00931	0.00958	0.14007	0.26333	2.54041	-0.43693
48/ 49/ 19 (C)	-0.09800	-0.01770	-0.04142	-0.00000	-0.56600	0.17643
48/ 49/ 20 (C)	0.00972	-0.00234	-0.08133	-0.02336	-1.81014	0.07512
48/ 49/ 21 (C)	-0.07869	0.00000	-0.06779	-0.00000	-0.84604	0.06331
48/ 49/ 22 (C)	0.02394	0.00718	-0.03176	0.19750	0.25439	-0.32770
48/ 49/ 23 (C)	-0.02231	-0.00929	-0.16788	-0.00000	-2.05671	0.09263
48/ 49/ 24 (C)	0.03424	-0.00123	-0.18883	-0.01226	-2.70968	0.03944
48/ 49/ 25 (C)	-0.14297	-0.00000	0.10859	0.00000	1.27076	0.08441
48/ 49/ 26 (C)	-0.00612	0.00958	0.15663	0.26333	2.75133	-0.43693
48/ 49/ 27 (C)	-0.06780	-0.01239	-0.02485	-0.00000	-0.34347	0.12350
48/ 49/ 28 (C)	0.00760	-0.00164	-0.05279	-0.01635	-1.21437	0.05258
48/ 49/ 29 (C)	-0.01118	0.00000	-0.05799	-0.00000	-0.73823	-0.00000
48/ 49/ 30 (C)	0.01237	0.00000	-0.13401	-0.00000	-1.63882	-0.00000
48/ 49/ 31 (C)	-0.04988	0.00000	-0.21271	-0.00000	-2.58244	0.06753
48/ 49/ 32 (C)	0.05960	0.00766	-0.17428	0.21066	-1.39769	-0.34955
48/ 49/ 33 (C)	-0.20871	-0.00000	0.07951	0.00000	0.90060	0.13506
48/ 49/ 34 (C)	0.01024	0.01532	0.15637	0.42133	3.26951	-0.69909
48/ 49/ 35 (C)	-0.09081	-0.01770	-0.08343	-0.00000	-1.07389	0.17643
48/ 49/ 36 (C)	0.01690	-0.00234	-0.12334	-0.02336	-2.31803	0.07512
48/ 49/ 37 (C)	-0.22827	-0.00000	0.17624	0.00000	2.06485	0.13506
48/ 49/ 38 (C)	-0.00931	0.01532	0.25310	0.42133	4.43377	-0.69909
48/ 49/ 39 (C)	-0.09120	-0.01770	-0.03728	-0.00000	-0.51327	0.17643
48/ 49/ 40 (C)	0.01052	-0.00234	-0.07719	-0.02336	-1.75741	0.07512
49/ 49/ 1	0.11144	0.00000	0.04098	0.00000	-1.00497	0.00000
49/ 49/ 2	-15.42933	-0.00000	-5.11333	-0.00000	165.09577	-0.00000
49/ 49/ 3	-15.42933	-0.00000	-5.11333	-0.00000	165.09577	-0.00000
49/ 49/ 4	-15.42933	-0.00000	-5.11333	-0.00000	165.09577	-0.00000
49/ 49/ 5	8.10383	-0.37910	0.97058	-12.22803	-94.52630	-5.19108
49/ 49/ 6	-11.16403	0.29920	-1.33827	-2.71844	108.19317	17.48738
49/ 49/ 7	7.90146	0.56867	1.94062	113.83727	-201.48090	-92.48063
49/ 49/ 8	19.07582	-0.23555	4.68508	-47.15294	-486.41792	38.30873
49/ 49/ 9 (C)	0.15773	0.00000	0.05632	0.00000	-1.50035	0.00000

Bar/Node/Case	FX (kip)	FY (kip)	FZ (kip)	MX (kip-in)	MY (kip-in)	MZ (kip-in)
49/ 49/ 10 (C)	0.30658	0.00000	0.10227	0.00000	-3.30192	0.00000
49/ 49/ 11 (C)	-0.00608	-0.01114	-0.05242	-0.35938	-0.16466	-0.15257
49/ 49/ 12 (C)	-0.57236	0.00879	-0.12028	-0.07990	5.79326	0.51395
49/ 49/ 13 (C)	0.04008	-0.00049	0.00984	-0.09902	-1.02148	0.08044
49/ 49/ 14 (C)	0.01659	0.00119	0.00408	0.23906	-0.42311	-0.19421
49/ 49/ 15 (C)	0.15773	0.00000	0.05632	0.00000	-1.50035	0.00000
49/ 49/ 16 (C)	0.46632	0.00000	0.15859	0.00000	-4.80217	0.00000
49/ 49/ 17 (C)	0.15168	-0.01114	0.00390	-0.35938	-1.86491	-0.15257
49/ 49/ 18 (C)	-0.41463	0.00879	-0.06396	-0.07990	4.29301	0.51395
49/ 49/ 19 (C)	0.19779	-0.00049	0.06616	-0.09902	-2.52173	0.08044
49/ 49/ 20 (C)	0.17432	0.00119	0.06039	0.23906	-1.92336	-0.19421
49/ 49/ 21 (C)	0.38462	-0.00836	0.09371	-0.26954	-4.10019	-0.11442
49/ 49/ 22 (C)	-0.04010	0.00660	0.04281	-0.05902	0.38826	0.38547
49/ 49/ 23 (C)	0.41020	-0.00026	0.13818	-0.05199	-4.51298	0.04223
49/ 49/ 24 (C)	0.39788	0.00053	0.12516	0.12551	-4.19882	-0.10196
49/ 49/ 25 (C)	0.08856	-0.01114	-0.01883	-0.35938	-1.06481	-0.15257
49/ 49/ 26 (C)	-0.47772	0.00879	-0.08548	-0.07990	4.89311	0.51395
49/ 49/ 27 (C)	0.12268	-0.00035	0.04068	-0.06931	-1.61519	0.05631
49/ 49/ 28 (C)	0.10825	0.00084	0.03664	0.16734	-1.19633	-0.13595
49/ 49/ 29 (C)	0.22082	0.00000	0.07885	0.00000	-2.10035	0.00000
49/ 49/ 30 (C)	0.34357	0.00000	0.11872	0.00000	-3.45126	0.00000
49/ 49/ 31 (C)	0.67815	-0.00891	0.18927	-0.28751	-7.21510	-0.12205
49/ 49/ 32 (C)	0.22513	0.00703	0.13499	-0.08392	-2.44878	0.41116
49/ 49/ 33 (C)	0.33385	-0.01783	0.03485	-0.57501	-3.71472	-0.24411
49/ 49/ 34 (C)	-0.57220	0.01407	-0.07373	-0.12783	5.81796	0.82233
49/ 49/ 35 (C)	0.29105	-0.00049	0.09787	-0.09902	-3.48216	0.08044
49/ 49/ 36 (C)	0.26759	0.00119	0.09211	0.23906	-2.88380	-0.19421
49/ 49/ 37 (C)	0.13224	-0.01783	-0.03318	-0.57501	-1.61369	-0.24411
49/ 49/ 38 (C)	-0.77381	0.01407	-0.14175	-0.12783	7.91699	0.82233
49/ 49/ 39 (C)	0.18202	-0.00049	0.06053	-0.09902	-2.37170	0.08044
49/ 49/ 40 (C)	0.15855	0.00119	0.05478	0.23906	-1.77334	-0.19421
49/ 65/ 1	0.07415	-0.00000	-0.02283	0.00000	-0.20742	-0.00000
49/ 65/ 2	-6.81695	-0.00000	2.09675	-0.00000	32.65852	0.00000
49/ 65/ 3	-6.81695	-0.00000	2.09675	-0.00000	32.65852	0.00000
49/ 65/ 4	-6.81695	-0.00000	2.09675	-0.00000	32.65852	0.00000
49/ 65/ 5	7.69956	0.29100	1.09567	-12.22895	-3.72222	-1.32416

Bar/Node/Case	FX (kip)	FY (kip)	FZ (kip)	MX (kip-in)	MY (kip-in)	MZ (kip-in)
49/ 65/ 6	-11.95730	0.20847	-1.09491	-2.71879	1.26600	-4.87255
49/ 65/ 7	2.70239	-3.71931	3.54186	113.84671	39.46149	-45.01081
49/ 65/ 8	8.52414	1.54050	8.55081	-47.15685	95.26846	-19.05030
49/ 65/ 9 (C)	0.09460	-0.00000	-0.02913	0.00000	-0.30540	-0.00000
49/ 65/ 10 (C)	0.13634	0.00000	-0.04197	0.00000	-0.65317	-0.00000
49/ 65/ 11 (C)	0.11838	0.00855	0.06542	-0.35941	0.40759	-0.03892
49/ 65/ 12 (C)	-0.45934	0.00813	0.00104	-0.07991	0.55419	-0.14173
49/ 65/ 13 (C)	0.01370	0.00324	0.01796	-0.09903	0.20006	-0.04002
49/ 65/ 14 (C)	0.00568	-0.00781	0.00744	0.23908	0.08287	0.09662
49/ 65/ 15 (C)	0.09460	-0.00000	-0.02913	0.00000	-0.30540	-0.00000
49/ 65/ 16 (C)	0.23094	0.00000	-0.07110	0.00000	-0.95857	-0.00000
49/ 65/ 17 (C)	0.21298	0.00855	0.03630	-0.35941	0.10214	-0.03892
49/ 65/ 18 (C)	-0.36473	0.00813	0.02808	-0.07991	0.24880	-0.14173
49/ 65/ 19 (C)	0.10831	0.00324	-0.01117	-0.09903	-0.10533	-0.04002
49/ 65/ 20 (C)	0.10028	-0.00781	-0.02169	0.23908	-0.22253	0.09662
49/ 65/ 21 (C)	0.28564	0.00541	-0.01154	-0.26958	-0.48958	-0.02919
49/ 65/ 22 (C)	-0.14764	0.00460	-0.05982	-0.05993	-0.37983	-0.10630
49/ 65/ 23 (C)	0.20405	0.00170	-0.05118	-0.05199	-0.69024	-0.02101
49/ 65/ 24 (C)	0.19984	-0.00410	-0.05670	0.12552	-0.75177	0.05073
49/ 65/ 25 (C)	0.17514	0.00855	0.04795	-0.35941	0.22435	-0.03892
49/ 65/ 26 (C)	-0.40257	0.00813	-0.01643	-0.07991	0.37095	-0.14173
49/ 65/ 27 (C)	0.06635	0.00226	-0.00491	-0.06932	-0.04319	-0.02802
49/ 65/ 28 (C)	0.06074	-0.00547	-0.01227	0.16735	-0.12523	0.06764
49/ 65/ 29 (C)	0.13245	-0.00000	-0.04078	0.00000	-0.42756	-0.00000
49/ 65/ 30 (C)	0.18169	-0.00000	-0.05594	0.00000	-0.69308	-0.00000
49/ 65/ 31 (C)	0.42637	0.00684	-0.04977	-0.28753	-1.08548	-0.03113
49/ 65/ 32 (C)	-0.03580	0.00490	-0.10128	-0.06392	-0.56820	-0.11339
49/ 65/ 33 (C)	0.37110	0.01368	0.04874	-0.57505	-0.00092	-0.06227
49/ 65/ 34 (C)	-0.55325	0.00980	-0.05427	-0.12785	0.19365	-0.22678
49/ 65/ 35 (C)	0.15449	0.00324	-0.02539	-0.09903	-0.29705	0.04002
49/ 65/ 36 (C)	0.14647	-0.00781	-0.03591	0.23908	-0.41424	0.09662
49/ 65/ 37 (C)	0.27455	0.01368	0.07847	-0.57505	0.37728	-0.06227
49/ 65/ 38 (C)	-0.64980	0.00980	-0.02454	-0.12785	0.61185	-0.22678
49/ 65/ 39 (C)	0.00884	0.00324	-0.00826	-0.09903	-0.07479	-0.04002
49/ 65/ 40 (C)	0.08082	-0.00781	-0.01878	0.23908	-0.19199	0.09662
50/ 50/ 1	0.11144	0.00000	0.04098	0.00000	-1.00497	0.00000

Bar/Node/Case	FX (kip)	FY (kip)	FZ (kip)	MX (kip-in)	MY (kip-in)	MZ (kip-in)
50/ 50/ 2	-15.42933	-0.00000	-5.11333	-0.00000	165.09576	-0.00000
50/ 50/ 3	-15.42933	-0.00000	-5.11333	-0.00000	165.09576	-0.00000
50/ 50/ 4	-15.42933	-0.00000	-5.11333	-0.00000	165.09576	-0.00000
50/ 50/ 5	-3.63652	-0.56734	-0.11182	-20.92590	12.37893	-4.35167
50/ 50/ 6	7.11901	0.48811	0.33358	5.99085	-20.87203	16.66057
50/ 50/ 7	19.07582	0.23555	4.68508	47.15294	-485.41792	-38.30673
50/ 50/ 8	7.90146	-0.56867	1.94062	113.83727	201.48090	92.48063
50/ 50/ 9 (C)	0.15773	0.00000	0.05532	0.00000	-1.50025	0.00000
50/ 50/ 10 (C)	0.30859	0.00000	0.10227	0.00000	-3.30192	0.00000
50/ 50/ 11 (C)	-0.35112	-0.01667	-0.08423	-0.61501	2.97728	-0.12790
50/ 50/ 12 (C)	-0.08502	0.01435	-0.07114	0.17607	2.00004	0.48965
50/ 50/ 13 (C)	0.01659	0.00119	0.00408	-0.23906	0.42311	0.19421
50/ 50/ 14 (C)	0.04006	0.00049	0.00984	0.09902	-1.02148	0.08044
50/ 50/ 15 (C)	0.15773	0.00000	0.05532	0.00000	-1.50025	0.00000
50/ 50/ 16 (C)	0.46632	0.00000	0.15859	0.00000	-4.80217	0.00000
50/ 50/ 17 (C)	-0.19339	-0.01667	-0.02791	-0.61501	1.47703	-0.12790
50/ 50/ 18 (C)	0.12271	0.01435	-0.01482	0.17607	0.49978	0.48965
50/ 50/ 19 (C)	0.17432	-0.00119	0.00039	-0.23906	-1.92336	0.19421
50/ 50/ 20 (C)	0.19779	0.00049	0.06619	0.09902	-2.52173	0.08044
50/ 50/ 21 (C)	0.12593	-0.01251	0.06985	-0.46126	-1.74373	-0.05592
50/ 50/ 22 (C)	0.36291	0.01076	0.07966	0.13205	-2.47666	0.36724
50/ 50/ 23 (C)	0.39748	-0.00063	0.13516	-0.12551	-4.19882	0.10196
50/ 50/ 24 (C)	0.41020	0.00026	0.13918	-0.05199	-4.51296	-0.04223
50/ 50/ 25 (C)	-0.25648	-0.01667	-0.05944	-0.61501	2.07713	-0.12790
50/ 50/ 26 (C)	0.05962	0.01435	-0.03735	0.17607	1.09989	0.48965
50/ 50/ 27 (C)	0.10625	-0.00084	0.03564	-0.16734	-1.19633	0.13595
50/ 50/ 28 (C)	0.12268	0.00035	0.04068	-0.06931	-1.61519	-0.0583
50/ 50/ 29 (C)	0.22082	0.00000	0.07985	0.00000	-2.10035	0.00000
50/ 50/ 30 (C)	0.34357	0.00000	0.11872	0.00000	-3.45126	0.00000
50/ 50/ 31 (C)	0.40212	-0.01334	0.16383	-0.49201	-4.70154	-0.10232
50/ 50/ 32 (C)	0.65500	0.01148	0.17430	0.14085	-5.48334	0.39172
50/ 50/ 33 (C)	-0.21823	-0.02668	-0.01805	-0.98402	1.31739	-0.20463
50/ 50/ 34 (C)	0.26754	0.02205	0.00489	0.28170	-0.25120	0.78345
50/ 50/ 35 (C)	0.25759	-0.00119	0.09211	-0.23906	-2.88380	0.1942
50/ 50/ 36 (C)	0.29105	0.00049	0.09787	0.09902	-3.48216	-0.08044
50/ 50/ 37 (C)	-0.41984	-0.02668	-0.08408	-0.98402	3.41343	-0.20463

Bar/Node/Case	FX (kip)	FY (kip)	FZ (kip)	MX (kip-in)	MY (kip-in)	MZ (kip-in)
50/ 50/ 38 (C)	0.09593	0.02295	-0.06314	0.28170	1.84993	0.78345
50/ 50/ 39 (C)	0.15855	-0.00119	0.05476	-0.23906	-1.77334	0.19421
50/ 50/ 40 (C)	0.18203	0.00049	0.06053	0.09902	-2.37170	0.08044
50/ 65/ 1	0.07415	-0.00000	-0.02283	0.00000	-0.20743	-0.00000
50/ 65/ 2	-6.81695	-0.00000	2.09875	-0.00000	32.65852	0.00000
50/ 65/ 3	-6.81695	-0.00000	2.09875	-0.00000	32.65852	0.00000
50/ 65/ 4	-6.81695	-0.00000	2.09875	-0.00000	32.65852	0.00000
50/ 65/ 5	-4.75925	0.57767	0.23355	-20.92756	17.73074	-4.81263
50/ 65/ 6	9.13516	-0.07863	-0.28663	5.99104	18.81234	-1.33073
50/ 65/ 7	6.52414	-1.54059	8.55081	47.15085	95.26846	19.05830
50/ 65/ 8	2.70239	3.71931	3.54186	-113.84671	39.46149	-45.01081
50/ 65/ 9 (C)	0.09460	-0.00000	-0.02913	0.00000	-0.30540	-0.00000
50/ 65/ 10 (C)	0.13634	0.00000	-0.04197	0.00000	-0.65317	-0.00000
50/ 65/ 11 (C)	-0.24779	0.01898	0.04959	-0.61506	1.03800	-0.14147
50/ 65/ 12 (C)	0.16058	-0.00231	0.02490	0.17608	-0.03691	-0.03911
50/ 65/ 13 (C)	0.00568	0.00781	0.00744	-0.23908	0.08287	-0.09662
50/ 65/ 14 (C)	0.01370	-0.00324	0.01796	0.09903	0.20006	0.04002
50/ 65/ 15 (C)	0.09460	-0.00000	-0.02913	0.00000	-0.30540	-0.00000
50/ 65/ 16 (C)	0.23094	0.00000	-0.07110	0.00000	-0.95857	-0.00000
50/ 65/ 17 (C)	-0.15318	0.01698	0.01006	-0.61506	0.73269	-0.14147
50/ 65/ 18 (C)	0.25516	-0.00231	-0.00433	0.17608	-0.34151	-0.03911
50/ 65/ 19 (C)	0.10028	0.00781	-0.02169	-0.23908	-0.22253	0.09662
50/ 65/ 20 (C)	0.10831	-0.00324	-0.01117	0.09903	-0.10533	0.04002
50/ 65/ 21 (C)	0.01102	0.01273	-0.03054	-0.46130	-0.01671	-0.10610
50/ 65/ 22 (C)	0.31729	-0.00173	-0.04201	0.13208	0.82221	0.02933
50/ 65/ 23 (C)	0.19984	0.00410	-0.05670	-0.12552	-0.75177	-0.05073
50/ 65/ 24 (C)	0.20405	-0.00170	-0.05118	0.05199	-0.69024	0.02101
50/ 65/ 25 (C)	-0.19102	0.01698	0.02261	-0.61506	0.85489	-0.14147
50/ 65/ 26 (C)	0.21734	-0.00231	0.00732	0.17608	-0.21915	-0.03911
50/ 65/ 27 (C)	0.06074	0.00547	-0.01227	-0.16735	-0.12523	-0.06764
50/ 65/ 28 (C)	0.06635	-0.00226	-0.00491	0.06932	-0.04319	0.02802
50/ 65/ 29 (C)	0.13245	-0.00000	-0.04078	0.00000	-0.42756	-0.00000
50/ 65/ 30 (C)	0.18169	-0.00000	-0.05594	0.00000	-0.69308	-0.00000
50/ 65/ 31 (C)	0.13344	0.01358	-0.07004	-0.49205	-0.58108	-0.11318
50/ 65/ 32 (C)	0.46013	-0.00185	-0.08227	0.14088	-1.44078	-0.03129
50/ 65/ 33 (C)	-0.21476	0.02716	0.00820	0.98410	0.06782	-0.22626

Bar/Node/Case	FX (kip)	FY (kip)	FZ (kip)	MX (kip-in)	MY (kip-in)	MZ (kip-in)
50/ 65/ 34 (C)	0.43862	-0.00370	-0.01526	0.28172	-0.75052	-0.06258
50/ 65/ 35 (C)	0.14647	0.00781	-0.03591	-0.23908	-0.41424	-0.09662
50/ 65/ 36 (C)	0.15449	-0.00324	-0.02539	0.09903	-0.29705	0.04002
50/ 65/ 37 (C)	-0.31131	0.02716	0.03793	-0.98410	1.38609	-0.22626
50/ 65/ 38 (C)	0.34207	-0.00370	0.01347	0.28172	-0.33231	-0.06258
50/ 65/ 39 (C)	0.09082	0.00781	-0.01878	-0.23908	-0.19199	-0.09662
50/ 65/ 40 (C)	0.09884	-0.00324	-0.00826	0.09903	-0.07479	0.04002
51/ 51/ 1	0.11144	0.00000	0.04098	0.00000	-1.00497	0.00000
51/ 51/ 2	-15.42933	-0.00000	-5.11333	-0.00000	165.09577	-0.00000
51/ 51/ 3	-15.42933	-0.00000	-5.11333	-0.00000	165.09577	-0.00000
51/ 51/ 4	-15.42933	-0.00000	-5.11333	-0.00000	165.09577	-0.00000
51/ 51/ 5	-11.15150	0.30035	-1.33748	-2.69928	108.14079	17.50890
51/ 51/ 6	7.11901	0.48811	0.33358	-5.99085	-20.87203	-16.66057
51/ 51/ 7	19.07582	0.23555	4.68508	-47.15204	-485.41792	38.30673
51/ 51/ 8	-7.90146	-0.56867	-1.94062	-113.83727	201.48090	92.48063
51/ 51/ 9 (C)	0.15773	0.00000	0.05532	0.00000	-1.50025	0.00000
51/ 51/ 10 (C)	0.30859	0.00000	0.10227	0.00000	-3.30192	0.00000
51/ 51/ 11 (C)	-0.57199	0.00883	-0.12025	-0.07933	5.79172	0.51459
51/ 51/ 12 (C)	-0.08502	0.01435	-0.07114	-0.17607	2.00004	-0.48965
51/ 51/ 13 (C)	-0.01659	-0.00119	-0.00409	-0.23906	0.42311	0.1942
51/ 51/ 14 (C)	0.04006	-0.00049	0.00984	-0.09902	-1.02148	0.08044
51/ 51/ 15 (C)	0.15773	0.00000	0.05532	0.00000	-1.50025	0.00000
51/ 51/ 16 (C)	0.46632	0.00000	0.15859	0.00000	-4.80217	0.00000
51/ 51/ 17 (C)	-0.41426	0.00883	-0.06393	-0.07933	4.29147	0.51459
51/ 51/ 18 (C)	0.12271	-0.01435	-0.01482	-0.17607	0.49978	-0.48965
51/ 51/ 19 (C)	0.14114	-0.00119	0.05224	-0.23906	-1.07714	0.19421
51/ 51/ 20 (C)	0.19779	-0.00049	0.06516	-0.09902	-2.52173	0.08044
51/ 51/ 21 (C)	-0.03982	0.00662	0.04283	-0.05950	0.36710	0.38594
51/ 51/ 22 (C)	0.36291	-0.01076	0.07366	-0.13205	-2.47666	-0.36724
51/ 51/ 23 (C)	0.39048	-0.00063	0.13088	-0.12551	3.75456	0.10196
51/ 51/ 24 (C)	0.41020	-0.00026	0.13918	-0.05199	-4.51296	0.04223
51/ 51/ 25 (C)	-0.47735	0.00883	-0.08646	-0.07933	4.89157	0.51459
51/ 51/ 26 (C)	0.05962	-0.01435	-0.03735	-0.17607	1.09989	-0.48965
51/ 51/ 27 (C)	0.08302	-0.00084	0.03094	-0.16734	-0.60397	0.13595
51/ 51/ 28 (C)	0.12268	-0.00035	0.04068	-0.06931	-1.61519	0.0583
51/ 51/ 29 (C)	0.22082	0.00000	0.07985	0.00000	-2.10035	0.00000

Bar/Node/Case	FX (kip)	FY (kip)	FZ (kip)	MX (kip-in)	MY (kip-in)	MZ (kip-in)
51/ 51/ 30 (C)	0.34357	0.00000	0.11872	0.00000	-3.45126	0.00000
51/ 51/ 31 (C)	0.22543	0.00706	0.13501	-0.06347	-2.44999	0.41167
51/ 51/ 32 (C)	0.65500	-0.01148	0.17430	-0.14085	-5.48334	-0.39172
51/ 51/ 33 (C)	-0.57161	0.01412	-0.07369	-0.12693	5.81556	0.82334
51/ 51/ 34 (C)	0.28754	-0.02295	0.00489	-0.28170	-0.25120	-0.78345
51/ 51/ 35 (C)	0.23440	-0.00119	0.08398	-0.23908	-2.03758	0.19421
51/ 51/ 36 (C)	0.29105	-0.00049	0.09787	-0.09902	-3.48216	0.08044
51/ 51/ 37 (C)	-0.77322	0.01412	-0.14172	-0.12693	7.91853	0.82334
51/ 51/ 38 (C)	0.08593	-0.02295	-0.06314	-0.28170	1.84983	-0.78345
51/ 51/ 39 (C)	0.12537	-0.00119	0.04661	-0.23908	-0.92712	0.19421
51/ 51/ 40 (C)	0.18202	-0.00049	0.06053	-0.09902	-2.37170	0.08044
51/ 65/ 1	0.07415	-0.00000	-0.02283	0.00000	-0.20742	-0.00000
51/ 65/ 2	-6.81695	-0.00000	2.09875	-0.00000	32.65852	0.00000
51/ 65/ 3	-6.81695	-0.00000	2.09875	-0.00000	32.65852	0.00000
51/ 65/ 4	-6.81695	-0.00000	2.09875	-0.00000	32.65852	0.00000
51/ 65/ 5	-11.94402	0.20772	-1.09435	-2.69983	1.27309	-4.81852
51/ 65/ 6	9.13536	0.07863	-0.28663	-5.99104	-18.81234	1.33072
51/ 65/ 7	6.52414	1.54059	8.55081	-47.15685	95.26846	-19.05830
51/ 65/ 8	-2.70239	3.71931	-3.54188	-113.84671	-39.46149	-46.01081
51/ 65/ 9 (C)	0.09460	-0.00000	-0.02913	0.00000	-0.30540	-0.00000
51/ 65/ 10 (C)	0.13634	0.00000	-0.04197	0.00000	-0.65317	-0.00000
51/ 65/ 11 (C)	-0.45895	0.00610	0.00103	-0.07934	0.55440	-0.14162
51/ 65/ 12 (C)	0.16058	0.00231	0.02480	-0.17608	-0.03591	0.03911
51/ 65/ 13 (C)	-0.00568	0.00781	-0.00744	-0.23908	-0.08287	-0.09662
51/ 65/ 14 (C)	0.01370	0.00324	0.01798	-0.09903	0.20006	-0.04002
51/ 65/ 15 (C)	0.09460	-0.00000	-0.02913	0.00000	-0.30540	-0.00000
51/ 65/ 16 (C)	0.23094	0.00000	-0.07110	0.00000	-0.95857	-0.00000
51/ 65/ 17 (C)	-0.36434	0.00610	-0.02807	-0.07934	0.24900	-0.14162
51/ 65/ 18 (C)	0.25518	0.00231	-0.00433	-0.17608	-0.34131	0.03911
51/ 65/ 19 (C)	0.08893	0.00781	-0.03650	-0.23908	-0.38327	-0.09662
51/ 65/ 20 (C)	0.10831	0.00324	-0.01117	-0.09903	-0.10533	-0.04002
51/ 65/ 21 (C)	-0.14735	0.00458	-0.05981	-0.05951	-0.37947	-0.10621
51/ 65/ 22 (C)	0.31729	0.00173	-0.04201	-0.13206	-0.82221	0.02933
51/ 65/ 23 (C)	0.19388	0.00410	-0.08451	-0.12552	-0.83376	-0.05073
51/ 65/ 24 (C)	0.20405	0.00170	-0.05118	-0.05199	-0.69024	-0.02101
51/ 65/ 25 (C)	-0.40218	0.00610	-0.01642	-0.07934	0.37116	-0.14162

Bar/Node/Case	FX (kip)	FY (kip)	FZ (kip)	MX (kip-in)	MY (kip-in)	MZ (kip-in)
51/ 65/ 26 (C)	0.21734	0.00231	0.00732	-0.17608	-0.21915	0.03911
51/ 65/ 27 (C)	0.05279	0.00547	-0.02268	-0.16735	-0.24125	-0.06764
51/ 65/ 28 (C)	0.06535	0.00225	-0.00491	-0.06932	-0.04319	-0.02802
51/ 65/ 29 (C)	0.13245	-0.00000	-0.04078	0.00000	-0.42756	-0.00000
51/ 65/ 30 (C)	0.18169	-0.00000	-0.05594	0.00000	-0.69306	-0.00000
51/ 65/ 31 (C)	-0.03549	0.00488	-0.10126	-0.06347	-0.96803	-0.11329
51/ 65/ 32 (C)	0.46013	0.00185	-0.08227	-0.14086	-1.44028	0.03129
51/ 65/ 33 (C)	-0.55262	0.00977	-0.05424	-0.12695	0.19398	-0.22659
51/ 65/ 34 (C)	0.43862	0.00370	-0.01626	-0.28172	-0.75052	0.06258
51/ 65/ 35 (C)	0.13512	0.00781	-0.05078	-0.23908	-0.57998	-0.09662
51/ 65/ 36 (C)	0.15446	0.00324	-0.02539	-0.09903	-0.29705	-0.04002
51/ 65/ 37 (C)	-0.64917	0.00977	-0.02452	-0.12695	0.61218	-0.22659
51/ 65/ 38 (C)	0.34207	0.00370	0.01347	-0.28172	-0.33231	0.06258
51/ 65/ 39 (C)	0.07947	0.00781	-0.03365	-0.23908	-0.35773	-0.09662
51/ 65/ 40 (C)	0.09884	0.00324	-0.00826	-0.09903	-0.07479	-0.04002
52/ 52/ 1	0.11144	0.00000	0.04098	0.00000	-1.00497	0.00000
52/ 52/ 2	-15.42933	-0.00000	-5.11333	-0.00000	165.09578	-0.00000
52/ 52/ 3	-15.42933	-0.00000	-5.11333	-0.00000	165.09578	-0.00000
52/ 52/ 4	-15.42933	-0.00000	-5.11333	-0.00000	165.09578	-0.00000
52/ 52/ 5	7.14926	0.48859	0.33549	5.99859	-20.99848	16.66949
52/ 52/ 6	-11.16402	-0.29920	-1.33827	2.71844	108.19317	-17.48738
52/ 52/ 7	7.90146	-0.56867	1.94062	-113.83727	-201.48090	92.48063
52/ 52/ 8	-19.07582	-0.23555	-4.68508	-47.15294	486.41792	38.30673
52/ 52/ 9 (C)	0.15773	0.00000	0.05632	0.00000	-1.50025	0.00000
52/ 52/ 10 (C)	0.30859	0.00000	0.10227	0.00000	-3.30192	0.00000
52/ 52/ 11 (C)	-0.03413	0.01436	-0.07108	0.17630	1.99632	0.48992
52/ 52/ 12 (C)	-0.57236	-0.00879	-0.12028	0.07990	5.79326	-0.51395
52/ 52/ 13 (C)	-0.04006	-0.00049	-0.00984	-0.09902	1.02148	0.08044
52/ 52/ 14 (C)	0.01659	-0.00119	0.00408	-0.23906	-0.42311	0.19421
52/ 52/ 15 (C)	0.15773	0.00000	0.05632	0.00000	-1.50025	0.00000
52/ 52/ 16 (C)	0.46632	0.00000	0.15859	0.00000	-4.80217	0.00000
52/ 52/ 17 (C)	0.12360	0.01436	-0.01476	0.17630	0.49607	0.48992
52/ 52/ 18 (C)	-0.41463	-0.00879	-0.05396	0.07990	4.2930	-0.51395
52/ 52/ 19 (C)	0.11767	-0.00049	0.04648	-0.09902	-0.47877	0.08044
52/ 52/ 20 (C)	0.17432	-0.00119	0.06039	-0.23906	-1.92336	0.19421
52/ 52/ 21 (C)	0.36357	0.01077	0.07971	0.13222	-2.47945	0.38744

Bar/Node/Case	FX (kip)	FY (kip)	FZ (kip)	MX (kip-in)	MY (kip-in)	MZ (kip-in)
52/ 52/ 22 (C)	-0.04010	-0.00000	0.04281	0.05992	0.36820	-0.36547
52/ 52/ 23 (C)	0.30814	-0.00022	0.12785	-0.05199	-3.44041	0.04223
52/ 52/ 24 (C)	0.39788	-0.00063	0.13516	-0.12551	-4.19882	0.10196
52/ 52/ 25 (C)	0.05051	0.01436	-0.03723	0.17630	1.09617	0.48992
52/ 52/ 26 (C)	-0.47772	-0.00879	-0.08648	0.07990	4.89311	-0.51395
52/ 52/ 27 (C)	0.06600	-0.00032	0.02690	-0.06931	-0.18512	0.05631
52/ 52/ 28 (C)	0.10025	-0.00084	0.03664	-0.10734	-1.19633	0.15595
52/ 52/ 29 (C)	0.22082	0.00000	0.07883	0.00000	-2.10035	0.00000
52/ 52/ 30 (C)	0.34357	0.00000	0.11872	0.00000	-3.45126	0.00000
52/ 52/ 31 (C)	0.65571	0.01149	0.17434	0.14104	-5.48631	0.39193
52/ 52/ 32 (C)	0.22513	-0.00703	0.13499	0.06392	-2.44876	-0.41116
52/ 52/ 33 (C)	0.28898	0.02298	0.00498	0.28208	-0.25715	0.78387
52/ 52/ 34 (C)	-0.57220	-0.01407	-0.07373	0.12783	5.81796	-0.82233
52/ 52/ 35 (C)	0.21094	-0.00049	0.07820	-0.09902	-1.43921	0.08044
52/ 52/ 36 (C)	0.26759	-0.00119	0.09211	-0.23906	-2.88380	0.19421
52/ 52/ 37 (C)	0.08735	0.02298	-0.06305	0.28208	1.84389	0.78387
52/ 52/ 38 (C)	-0.77381	-0.01407	-0.14175	0.12783	7.91899	-0.82233
52/ 52/ 39 (C)	0.10190	-0.00049	0.04065	-0.09902	-0.32875	0.08044
52/ 52/ 40 (C)	0.15855	-0.00119	0.05470	-0.23906	-1.77334	0.19421
52/ 65/ 1	0.07415	-0.00000	-0.02283	0.00000	-0.20742	-0.00000
52/ 65/ 2	-6.81695	-0.00000	2.09875	-0.00000	32.65852	0.00000
52/ 65/ 3	-6.81695	-0.00000	2.09875	-0.00000	32.65852	0.00000
52/ 65/ 4	-6.81695	-0.00000	2.09875	-0.00000	32.65852	0.00000
52/ 65/ 5	9.18742	-0.07894	-0.28528	5.99897	-18.79521	-1.32908
52/ 65/ 6	-11.95730	-0.20547	-1.09481	2.71879	1.26000	4.32255
52/ 65/ 7	2.70239	3.71931	3.54188	-113.84671	39.46149	-46.01081
52/ 65/ 8	-5.52414	1.54059	-8.55081	-47.15685	-95.26846	-19.05830
52/ 65/ 9 (C)	0.09460	-0.00000	-0.02913	0.00000	-0.30540	-0.00000
52/ 65/ 10 (C)	0.13634	0.00000	-0.04197	0.00000	-0.65317	-0.00000
52/ 65/ 11 (C)	0.18152	-0.00232	0.02484	0.17631	-0.03541	-0.03906
52/ 65/ 12 (C)	-0.45934	-0.00613	0.00104	0.07991	0.55419	0.14173
52/ 65/ 13 (C)	-0.01370	0.00324	-0.01798	-0.09903	-0.20006	-0.04002
52/ 65/ 14 (C)	0.00568	0.00781	0.00744	-0.23908	0.08287	-0.09662
52/ 65/ 15 (C)	0.09460	-0.00000	-0.02913	0.00000	-0.30540	-0.00000
52/ 65/ 16 (C)	0.23094	0.00000	-0.07110	0.00000	-0.95857	-0.00000
52/ 65/ 17 (C)	0.25612	-0.00232	-0.00429	0.17631	-0.34980	-0.03906

Bar/Node/Case	FX (kip)	FY (kip)	FZ (kip)	MX (kip-in)	MY (kip-in)	MZ (kip-in)
52/ 65/ 18 (C)	-0.36473	-0.00613	-0.02808	0.07991	0.24980	0.14173
52/ 65/ 19 (C)	0.08090	0.00324	-0.04708	-0.09903	-0.50548	-0.04002
52/ 65/ 20 (C)	0.10028	0.00781	-0.02169	-0.23908	-0.22253	-0.09662
52/ 65/ 21 (C)	0.31800	-0.00174	-0.04198	0.13223	-0.82183	-0.02930
52/ 65/ 22 (C)	-0.14764	-0.00460	-0.05982	0.05993	-0.37963	0.10530
52/ 65/ 23 (C)	0.18967	0.00170	-0.07003	-0.05199	-0.90031	-0.02101
52/ 65/ 24 (C)	0.19984	0.00410	-0.05670	-0.12552	-0.75177	-0.05073
52/ 65/ 25 (C)	0.21828	-0.00232	0.00735	0.17631	-0.21864	-0.03906
52/ 65/ 26 (C)	-0.40257	-0.00613	-0.01643	0.07991	0.37095	0.14173
52/ 65/ 27 (C)	0.04717	0.00226	-0.03005	-0.06932	-0.32328	-0.02802
52/ 65/ 28 (C)	0.06074	0.00547	-0.01227	-0.16735	-0.12523	-0.06764
52/ 65/ 29 (C)	0.13245	-0.00000	-0.04078	0.00000	-0.42756	-0.00000
52/ 65/ 30 (C)	0.18169	-0.00000	-0.05594	0.00000	-0.69306	-0.00000
52/ 65/ 31 (C)	0.46088	-0.00186	-0.08224	0.14105	-1.43987	-0.03123
52/ 65/ 32 (C)	-0.03580	-0.00490	-0.10128	0.06392	-0.96820	0.11339
52/ 65/ 33 (C)	0.44012	-0.00371	-0.01620	0.28210	-0.74971	-0.06250
52/ 65/ 34 (C)	-0.55325	-0.00988	-0.05427	0.12785	0.19365	0.22678
52/ 65/ 35 (C)	0.12709	0.00324	-0.06130	-0.09903	-0.69717	-0.04002
52/ 65/ 36 (C)	0.14647	0.00781	-0.03591	-0.23908	-0.41424	-0.09662
52/ 65/ 37 (C)	0.34357	-0.00371	0.01353	0.28210	-0.33151	-0.06250
52/ 65/ 38 (C)	-0.64980	-0.00988	-0.02454	0.12785	0.61185	0.22678
52/ 65/ 39 (C)	0.07146	0.00324	-0.04417	-0.09903	-0.47492	-0.04002
52/ 65/ 40 (C)	0.09082	0.00781	-0.01878	-0.23908	-0.19199	-0.09662
53/ 53/ 1	0.11144	0.00000	0.04098	0.00000	-1.00497	0.00000
53/ 53/ 2	-15.42933	-0.00000	-5.11333	0.00000	165.09577	-0.00000
53/ 53/ 3	-15.42933	-0.00000	-5.11333	-0.00000	165.09577	-0.00000
53/ 53/ 4	-15.42933	-0.00000	-5.11333	-0.00000	165.09577	-0.00000
53/ 53/ 5	7.14926	-0.48859	0.33549	-5.99859	20.99848	-16.66949
53/ 53/ 6	3.82399	0.56843	-0.11102	20.94507	12.32655	-4.37316
53/ 53/ 7	7.90146	-0.56867	-1.94062	-113.83727	201.48090	92.48063
53/ 53/ 8	-19.07582	0.23555	-4.68508	47.15294	486.41792	-38.30673
53/ 53/ 9 (C)	0.15773	0.00000	0.05632	0.00000	-1.50025	0.00000
53/ 53/ 10 (C)	0.30859	0.00000	0.10227	0.00000	-3.30 92	0.00000
53/ 53/ 11 (C)	-0.03413	-0.01436	-0.07108	-0.17630	1.99632	-0.48992
53/ 53/ 12 (C)	-0.35076	0.01571	-0.08421	0.61558	2.97574	0.12853
53/ 53/ 13 (C)	-0.04006	0.00049	-0.00984	0.09902	1.02148	-0.08044

Bar/Node/Case	FX (kip)	FY (kip)	FZ (kip)	MX (kip-in)	MY (kip-in)	MZ (kip-in)
53/ 53/ 14 (C)	-0.01659	-0.00119	-0.00408	-0.23908	0.42311	0.19421
53/ 53/ 15 (C)	0.15773	0.00000	0.05632	0.00000	-1.50025	0.00000
53/ 53/ 16 (C)	0.46632	0.00000	0.15859	0.00000	-4.80217	0.00000
53/ 53/ 17 (C)	0.12360	-0.01436	-0.01476	-0.17830	0.49607	-0.48992
53/ 53/ 18 (C)	-0.19302	0.01671	-0.02789	0.61558	1.47549	0.12853
53/ 53/ 19 (C)	0.11767	0.00040	0.04648	0.09902	-0.47977	-0.09044
53/ 53/ 20 (C)	0.14114	-0.00119	0.05224	-0.23908	-1.07714	0.19421
53/ 53/ 21 (C)	0.36357	-0.01077	0.07971	-0.13222	-2.47945	-0.36744
53/ 53/ 22 (C)	0.12811	0.01253	0.06988	0.46163	-1.74488	0.09640
53/ 53/ 23 (C)	0.35814	0.00026	0.12789	0.05199	-3.44041	-0.04223
53/ 53/ 24 (C)	0.38046	-0.00063	0.13088	-0.12551	-3.75456	0.10196
53/ 53/ 25 (C)	0.05051	-0.01436	-0.03729	0.17830	1.06617	-0.48992
53/ 53/ 26 (C)	-0.25612	0.01671	-0.05042	0.61558	2.07559	0.12853
53/ 53/ 27 (C)	0.05660	0.00035	0.02690	0.06931	-0.18512	-0.05631
53/ 53/ 28 (C)	0.08302	-0.00084	0.03094	-0.16734	-0.60397	0.13595
53/ 53/ 29 (C)	0.22082	0.00000	0.07885	0.00000	-2.10035	0.00000
53/ 53/ 30 (C)	0.34357	0.00000	0.11872	0.00000	-3.45126	0.00000
53/ 53/ 31 (C)	0.65571	-0.01149	0.17434	-0.14104	-5.48831	0.39193
53/ 53/ 32 (C)	0.40241	0.01337	0.16384	0.49246	-4.70277	0.10282
53/ 53/ 33 (C)	0.28895	-0.02298	0.00498	-0.28208	-0.25715	-0.78387
53/ 53/ 34 (C)	-0.21764	0.02673	-0.01601	0.98492	1.30993	0.20564
53/ 53/ 35 (C)	0.21094	0.00049	0.07820	0.09902	-1.43921	-0.08044
53/ 53/ 36 (C)	0.23440	-0.00119	0.08396	-0.23908	-2.03758	0.19421
53/ 53/ 37 (C)	0.08735	-0.02298	-0.06305	-0.28208	1.84389	-0.78387
53/ 53/ 38 (C)	-0.41925	0.02673	-0.08404	0.98492	3.41006	0.20564
53/ 53/ 39 (C)	0.10190	0.00049	0.04085	0.09902	-0.32875	-0.08044
53/ 53/ 40 (C)	0.12537	-0.00119	0.04661	-0.23908	-0.92712	0.19421
53/ 65/ 1	0.07415	-0.00000	-0.02283	0.00000	-0.20742	-0.00000
53/ 65/ 2	-6.81695	-0.00000	2.09875	-0.00000	32.65852	0.00000
53/ 65/ 3	-6.81695	-0.00000	2.09875	-0.00000	32.65852	0.00000
53/ 65/ 4	-6.81695	-0.00000	2.09875	-0.00000	32.65852	0.00000
53/ 65/ 5	9.16742	0.07894	0.28528	-5.09897	-18.79521	1.32906
53/ 65/ 6	-4.74597	-0.57842	0.23411	20.94672	17.73784	4.81766
53/ 65/ 7	-2.70239	3.71931	-3.54186	-113.84671	-39.48148	-46.01081
53/ 65/ 8	-6.52414	-1.54059	-8.55981	47.15685	-95.26846	19.05830
53/ 65/ 9 (C)	0.09460	-0.00000	-0.02913	0.00000	-0.30540	0.00000

Bar/Node/Case	FX (kip)	FY (kip)	FZ (kip)	MX (kip-in)	MY (kip-in)	MZ (kip-in)
53/ 65/ 10 (C)	0.13634	0.00000	-0.04197	0.00000	-0.65317	-0.00000
53/ 65/ 11 (C)	0.16152	0.00232	0.02484	-0.17631	-0.03541	0.03906
53/ 65/ 12 (C)	-0.24740	-0.01700	0.04010	0.61562	1.03830	0.14159
53/ 65/ 13 (C)	-0.01370	-0.00324	0.01796	0.09903	-0.20006	0.04002
53/ 65/ 14 (C)	-0.00568	0.00781	-0.00744	-0.23908	0.06287	-0.09662
53/ 65/ 15 (C)	0.09460	-0.00000	-0.02913	0.00000	-0.30540	-0.00000
53/ 65/ 16 (C)	0.23094	0.00000	-0.07110	0.00000	-0.95857	-0.00000
53/ 65/ 17 (C)	0.25612	0.00232	-0.00429	-0.17631	-0.34080	0.03906
53/ 65/ 18 (C)	-0.15279	-0.01700	0.01098	0.61562	0.73290	0.14159
53/ 65/ 19 (C)	0.08090	-0.00324	-0.04708	0.09903	-0.50546	0.04002
53/ 65/ 20 (C)	0.08893	0.00781	-0.03656	-0.23908	-0.38827	-0.09662
53/ 65/ 21 (C)	0.31800	0.00174	-0.04198	-0.13223	-0.82183	0.02930
53/ 65/ 22 (C)	0.01131	-0.01275	-0.03053	0.46172	-0.01655	0.10819
53/ 65/ 23 (C)	0.18957	-0.00170	-0.07003	0.05199	-0.90031	0.02101
53/ 65/ 24 (C)	0.19388	0.00410	-0.06451	-0.12552	-0.83878	-0.05073
53/ 65/ 25 (C)	0.21828	0.00232	0.00736	-0.17631	-0.21864	0.03906
53/ 65/ 26 (C)	-0.19063	-0.01700	0.02263	0.61562	0.85508	0.14159
53/ 65/ 27 (C)	0.04717	-0.00226	-0.03005	0.06932	-0.32328	0.02802
53/ 65/ 28 (C)	0.05279	0.00547	-0.02268	-0.16735	-0.24125	-0.06764
53/ 65/ 29 (C)	0.13245	-0.00000	-0.04078	0.00000	-0.42756	-0.00000
53/ 65/ 30 (C)	0.18159	-0.00000	-0.05594	0.00000	-0.89306	-0.00000
53/ 65/ 31 (C)	0.46088	0.00188	-0.08224	-0.14105	-1.43987	0.03125
53/ 65/ 32 (C)	0.13375	-0.01360	-0.07003	0.49250	-0.58091	0.11327
53/ 65/ 33 (C)	0.34012	0.00371	-0.01820	-0.28210	0.74971	0.06250
53/ 65/ 34 (C)	-0.21414	-0.02720	0.00823	0.98500	0.90822	0.22655
53/ 65/ 35 (C)	0.12709	-0.00324	-0.06130	0.09903	-0.69717	0.04002
53/ 65/ 36 (C)	0.13512	0.00781	-0.05078	-0.23908	-0.57998	-0.09662
53/ 65/ 37 (C)	0.34357	0.00371	0.01353	-0.28210	-0.33151	0.06250
53/ 65/ 38 (C)	-0.31059	-0.02720	0.03795	0.98500	1.38642	0.22655
53/ 65/ 39 (C)	0.07144	-0.00324	0.04417	0.09903	0.47492	0.04002
53/ 65/ 40 (C)	0.07947	0.00781	-0.03369	-0.23908	-0.35773	-0.09662
54/ 54/ 1	0.11144	0.00000	0.04098	0.00000	-1.00497	0.00000
54/ 54/ 2	-15.42933	-0.00000	-5.11333	-0.00000	165.09576	-0.00000
54/ 54/ 3	-15.42933	-0.00000	-5.11333	-0.00000	165.09576	-0.00000
54/ 54/ 4	-15.42933	-0.00000	-5.11333	-0.00000	165.09576	-0.00000
54/ 54/ 5	-11.15150	-0.30035	-1.33748	2.69928	108.14079	-17.50898

Bar/Node/Case	FX (kip)	FY (kip)	FZ (kip)	MX (kip-in)	MY (kip-in)	MZ (kip-in)
54/ 54/ 6	8.13407	0.37958	0.97240	12.23591	-94.65275	5.19939
54/ 54/ 7	-19.07582	-0.23555	-4.68508	-47.15294	486.41792	38.30673
54/ 54/ 8	-7.90146	0.58897	-1.94062	113.83721	201.48093	-92.48063
54/ 54/ 9 (C)	0.15773	0.00000	0.05632	0.00000	-1.50025	0.00000
54/ 54/ 10 (C)	0.30859	0.00000	0.10227	0.00000	-3.30192	0.00000
54/ 54/ 11 (C)	-0.57199	-0.00883	-0.12025	0.07933	5.79177	-0.51459
54/ 54/ 12 (C)	-0.06519	0.01118	-0.05236	0.35962	-0.16833	0.15283
54/ 54/ 13 (C)	-0.01659	0.00119	-0.00408	0.23908	0.42311	-0.19421
54/ 54/ 14 (C)	-0.04006	-0.00049	-0.00984	-0.09902	1.02148	0.08044
54/ 54/ 15 (C)	0.15773	0.00000	0.05632	0.00000	-1.50025	0.00000
54/ 54/ 16 (C)	0.46632	0.00000	0.15859	0.00000	-4.80217	0.00000
54/ 54/ 17 (C)	-0.41429	-0.03883	-0.06393	0.07933	4.29147	-0.51459
54/ 54/ 18 (C)	0.15255	0.01118	0.00396	0.35962	-1.66883	0.15283
54/ 54/ 19 (C)	0.14114	0.00119	0.05224	0.23908	-1.07714	-0.19421
54/ 54/ 20 (C)	0.11767	-0.00049	0.04648	-0.09902	-0.47977	0.08044
54/ 54/ 21 (C)	-0.03982	-0.00652	0.04283	0.05954	0.36710	-0.38594
54/ 54/ 22 (C)	0.38528	0.00837	0.09375	0.26973	-4.10297	0.11462
54/ 54/ 23 (C)	0.38046	0.00063	0.13088	0.12551	-3.75456	-0.10196
54/ 54/ 24 (C)	0.36814	-0.00026	0.12789	-0.05199	-3.44041	0.04223
54/ 54/ 25 (C)	-0.47735	-0.00883	-0.08646	0.07933	4.89157	-0.51459
54/ 54/ 26 (C)	0.09945	0.01118	0.01857	0.35962	-1.06853	0.15283
54/ 54/ 27 (C)	0.08302	0.00084	0.03094	0.16734	-0.60397	-0.13595
54/ 54/ 28 (C)	0.06660	-0.00035	0.02690	-0.06931	-0.18512	0.05631
54/ 54/ 29 (C)	0.22082	0.00000	0.07885	0.00000	-2.10035	0.00000
54/ 54/ 30 (C)	0.34357	0.00000	0.11872	0.00000	-3.45126	0.00000
54/ 54/ 31 (C)	0.22543	-0.00706	0.13501	0.06347	-2.44999	-0.41167
54/ 54/ 32 (C)	0.67887	0.00893	0.18932	0.28769	-7.21807	0.12236
54/ 54/ 33 (C)	-0.57161	-0.01412	-0.07369	0.12693	5.81550	-0.82334
54/ 54/ 34 (C)	0.35527	0.01785	0.03494	0.57538	-3.72067	0.24452
54/ 54/ 35 (C)	0.23440	0.00119	0.08396	0.23908	-2.03758	-0.19421
54/ 54/ 36 (C)	0.21094	-0.00049	0.07820	-0.09902	-1.43921	0.08044
54/ 54/ 37 (C)	-0.77327	-0.01412	-0.14172	0.12693	7.91853	-0.82334
54/ 54/ 38 (C)	0.13368	0.01785	-0.03309	0.57538	-1.81983	0.24452
54/ 54/ 39 (C)	0.12537	0.00119	0.04661	0.23908	-0.92712	-0.19421
54/ 54/ 40 (C)	0.10190	-0.00049	0.04085	-0.09902	-0.32875	0.08044
54/ 65/ 1	0.07415	-0.00000	-0.02283	0.00000	-0.20742	-0.00000

Bar/Node/Case	FX (kip)	FY (kip)	FZ (kip)	MX (kip-in)	MY (kip-in)	MZ (kip-in)
54/ 65/ 2	-6.81695	-0.00000	2.09875	-0.00000	32.65852	0.00000
54/ 65/ 3	-6.81695	-0.00000	2.09875	-0.00000	32.65852	0.00000
54/ 65/ 4	-6.81695	-0.00000	2.09875	-0.00000	32.65852	0.00000
54/ 65/ 5	-11.94402	-0.20773	-1.09435	2.69963	1.27309	4.81852
54/ 65/ 6	7.73163	-0.29131	1.09702	12.23689	-3.70509	1.32583
54/ 65/ 7	-8.52414	1.54059	-8.55981	-47.15685	-95.26846	-19.05830
54/ 65/ 8	-2.70239	-3.71931	-3.54186	113.84671	-39.48148	46.01081
54/ 65/ 9 (C)	0.09460	-0.00000	-0.02913	0.00000	-0.30540	-0.00000
54/ 65/ 10 (C)	0.13634	0.00000	-0.04197	0.00000	-0.65317	-0.00000
54/ 65/ 11 (C)	-0.45895	-0.00610	0.00106	0.07934	0.55440	0.14162
54/ 65/ 12 (C)	0.11932	-0.00856	0.06546	0.35964	0.40809	0.03897
54/ 65/ 13 (C)	-0.00568	-0.00781	-0.00744	0.23908	-0.06287	0.09662
54/ 65/ 14 (C)	-0.01370	0.00324	0.01796	-0.09903	0.20006	-0.04002
54/ 65/ 15 (C)	0.09460	-0.00000	-0.02913	0.00000	-0.30540	-0.00000
54/ 65/ 16 (C)	0.23094	0.00000	-0.07110	0.00000	-0.95857	-0.00000
54/ 65/ 17 (C)	-0.36434	-0.00610	-0.02807	0.07934	0.24900	0.14162
54/ 65/ 18 (C)	0.21392	-0.00856	0.03634	0.35964	0.10270	0.03897
54/ 65/ 19 (C)	0.08893	-0.00781	-0.03656	0.23908	-0.38827	0.09662
54/ 65/ 20 (C)	0.08090	0.00324	-0.04708	-0.09903	-0.50546	-0.04002
54/ 65/ 21 (C)	-0.14735	0.00458	-0.05981	0.05951	-0.37947	0.10621
54/ 65/ 22 (C)	0.28635	-0.00642	-0.01151	0.26973	-0.48921	0.02922
54/ 65/ 23 (C)	0.19388	-0.00410	-0.06451	0.12552	-0.83878	0.05073
54/ 65/ 24 (C)	0.18957	0.00170	-0.07003	-0.05199	-0.90031	-0.02101
54/ 65/ 25 (C)	-0.40218	-0.00610	-0.01642	0.07934	0.37116	0.14162
54/ 65/ 26 (C)	0.17608	-0.00856	0.04799	0.35964	0.22485	0.03897
54/ 65/ 27 (C)	0.05279	-0.00547	-0.02268	0.16735	-0.24125	0.06764
54/ 65/ 28 (C)	0.04717	0.00226	-0.03005	-0.06932	-0.32328	-0.02802
54/ 65/ 29 (C)	0.13245	-0.00000	-0.04078	0.00000	-0.42756	-0.00000
54/ 65/ 30 (C)	0.18159	-0.00000	-0.05594	0.00000	-0.89306	-0.00000
54/ 65/ 31 (C)	-0.03549	-0.00488	-0.10129	0.06347	-0.96803	0.11329
54/ 65/ 32 (C)	0.42712	-0.00685	-0.04974	0.28771	-1.08508	0.03117
54/ 65/ 33 (C)	-0.55262	-0.00977	-0.05424	0.12695	0.19398	0.22659
54/ 65/ 34 (C)	0.37261	-0.01370	0.04880	0.57543	-0.04011	0.06235
54/ 65/ 35 (C)	0.13512	-0.00781	-0.05078	0.23908	-0.57998	0.09662
54/ 65/ 36 (C)	0.12709	0.00324	-0.06130	-0.09903	-0.69717	-0.04002
54/ 65/ 37 (C)	-0.84917	-0.00977	-0.02452	0.12695	0.61218	0.22659

Bar/Node/Case	FX (kip)	FY (kip)	FZ (kip)	MX (kip-in)	MY (kip-in)	MZ (kip-in)
64/ 66/ 39 (C)	0.27906	-0.01370	0.07853	0.57543	-0.37809	0.06235
64/ 66/ 39 (C)	0.07947	-0.00781	-0.03305	0.23908	-0.35773	0.09662
64/ 66/ 40 (C)	0.07144	0.00324	-0.04417	-0.09903	-0.47492	-0.04002
66/ 66/ 1	0.11144	0.00000	0.04098	0.00000	-1.00497	0.00000
66/ 66/ 2	-15.42933	-0.00000	-5.11333	-0.00000	165.09577	-0.00000
66/ 66/ 3	-15.42933	-0.00000	-5.11333	-0.00000	165.09577	-0.00000
66/ 66/ 4	15.42933	-0.00000	-5.11333	-0.00000	165.09577	-0.00000
66/ 66/ 5	3.63852	0.56734	-0.11182	20.92590	12.37893	4.35167
66/ 66/ 6	8.13407	-0.37958	0.97249	-12.23597	-94.65275	-5.19999
66/ 66/ 7	-19.07582	0.23555	-4.68508	47.15294	486.41792	-38.30673
66/ 66/ 8	7.90146	0.56867	1.94062	113.83727	-201.48000	-92.48083
66/ 66/ 9 (C)	0.15773	0.00000	0.05632	0.00000	-1.50025	0.00000
66/ 66/ 10 (C)	0.30859	0.00000	0.10227	0.00000	-3.30192	0.00000
66/ 66/ 11 (C)	-0.35112	0.01667	-0.08423	0.61501	2.97728	0.12790
66/ 66/ 12 (C)	-0.00519	-0.01115	-0.05236	-0.35962	-0.16838	-0.15283
66/ 66/ 13 (C)	0.01659	0.00119	0.00408	0.23908	-0.42311	-0.19421
66/ 66/ 14 (C)	-0.04006	0.00049	-0.00984	0.09902	1.02148	-0.08044
66/ 66/ 15 (C)	0.15773	0.00000	0.05632	0.00000	-1.50025	0.00000
66/ 66/ 16 (C)	0.46632	0.00000	0.15859	0.00000	-4.80217	0.00000
66/ 66/ 17 (C)	-0.19339	0.01667	-0.02791	0.61501	1.47703	0.12790
66/ 66/ 18 (C)	0.15255	-0.01115	0.00396	-0.35962	-1.66863	-0.15283
66/ 66/ 19 (C)	0.17432	0.00119	0.06039	0.23908	-1.92336	-0.19421
66/ 66/ 20 (C)	0.11767	0.00049	0.04648	0.09902	-0.47877	-0.08044
66/ 66/ 21 (C)	0.12583	0.01251	0.06985	0.46126	-1.74373	0.09592
66/ 66/ 22 (C)	0.38528	-0.00837	0.09375	-0.26971	-4.10297	-0.11462
66/ 66/ 23 (C)	0.39788	0.00063	0.13576	0.12551	-4.19882	-0.10196
66/ 66/ 24 (C)	0.36814	0.00028	0.12785	0.05199	-3.44041	-0.04223
66/ 66/ 25 (C)	-0.25548	0.01667	-0.05044	0.61501	2.07713	0.12790
66/ 66/ 26 (C)	0.08945	-0.01115	-0.01857	-0.35962	-1.06853	-0.15283
66/ 66/ 27 (C)	0.10525	0.00084	0.03664	0.16734	-1.19633	-0.13595
66/ 66/ 28 (C)	0.05660	0.00035	0.02690	0.06931	-0.18512	-0.05631
66/ 66/ 29 (C)	0.22082	0.00000	0.07885	0.00000	-2.10035	0.00000
66/ 66/ 30 (C)	0.34357	0.00000	0.11872	0.00000	-3.45126	0.00000
66/ 66/ 31 (C)	0.40212	0.01334	0.16383	0.49201	-4.70154	0.10232
66/ 66/ 32 (C)	0.67367	-0.00892	0.18932	-0.28769	-7.21807	-0.12228
66/ 66/ 33 (C)	-0.21823	0.02868	-0.01605	0.98402	1.31239	0.20463

Bar/Node/Case	FX (kip)	FY (kip)	FZ (kip)	MX (kip-in)	MY (kip-in)	MZ (kip-in)
66/ 66/ 34 (C)	0.33527	-0.01785	0.03494	-0.57538	-3.72067	-0.24452
66/ 66/ 35 (C)	0.26759	0.00119	0.09211	0.23906	-2.86380	-0.19421
66/ 66/ 36 (C)	0.21094	0.00049	0.07820	0.09902	-1.43921	-0.08044
66/ 66/ 37 (C)	-0.41964	0.02668	-0.08408	0.98402	3.41343	0.20463
66/ 66/ 38 (C)	0.13356	-0.01785	-0.03309	-0.57538	-1.61903	-0.24452
66/ 66/ 39 (C)	0.15855	0.00119	0.05478	0.23906	-1.77334	-0.19421
66/ 66/ 40 (C)	0.10190	0.00049	0.04085	0.09902	-0.32875	-0.08044
66/ 66/ 1	0.07415	-0.00000	-0.02283	0.00000	-0.20742	-0.00000
66/ 66/ 2	-6.81695	0.00000	2.09875	-0.00000	32.65852	0.00000
66/ 66/ 3	-6.81695	0.00000	2.09875	-0.00000	32.65852	0.00000
66/ 66/ 4	-6.81695	0.00000	2.09875	0.00000	32.65852	0.00000
66/ 66/ 5	-4.75925	-0.57767	0.23355	20.92756	17.73074	4.81363
66/ 66/ 6	7.73183	0.29131	1.09702	-12.23389	-3.70509	-1.32583
66/ 66/ 7	-8.52414	-1.54059	-8.55081	47.15385	-95.26846	19.05830
66/ 66/ 8	2.70239	-3.71931	3.54186	113.84371	39.46149	46.01081
66/ 66/ 9 (C)	0.09450	-0.00000	-0.02913	0.00000	-0.30540	-0.00000
66/ 66/ 10 (C)	0.13634	0.00000	-0.04197	0.00000	-0.65317	-0.00000
66/ 66/ 11 (C)	-0.24779	-0.01698	0.04009	0.61508	1.03809	0.14147
66/ 66/ 12 (C)	0.11932	0.00856	0.06546	-0.35964	0.40809	-0.03897
66/ 66/ 13 (C)	0.00558	-0.00781	0.00744	0.23908	0.08287	0.09662
66/ 66/ 14 (C)	-0.01370	-0.00324	-0.01796	0.09903	-0.20006	0.04002
66/ 66/ 15 (C)	0.09450	-0.00000	-0.02913	0.00000	-0.30540	-0.00000
66/ 66/ 16 (C)	0.23034	0.00000	-0.07110	0.00000	-0.95857	-0.00000
66/ 66/ 17 (C)	-0.15318	-0.01698	0.01096	0.61508	0.73289	0.14147
66/ 66/ 18 (C)	0.21392	0.00856	0.03634	-0.35964	0.10270	-0.03897
66/ 66/ 19 (C)	0.10028	-0.00781	-0.02169	0.23908	-0.22253	0.09662
66/ 66/ 20 (C)	0.08090	-0.00324	-0.04708	0.09903	-0.50548	0.04002
66/ 66/ 21 (C)	0.01102	-0.01273	-0.03054	0.46130	-0.01671	0.10610
66/ 66/ 22 (C)	0.28835	0.00642	-0.01151	-0.26973	-0.48921	-0.02922
66/ 66/ 23 (C)	0.19984	-0.00410	-0.05670	0.12552	-0.75177	0.05073
66/ 66/ 24 (C)	0.18957	-0.00170	-0.07003	0.05199	-0.90031	0.02101
66/ 66/ 25 (C)	-0.19102	-0.01698	0.02261	0.61508	0.85485	0.14147
66/ 66/ 26 (C)	0.17608	0.00856	0.04799	-0.35964	0.22485	-0.03897
66/ 66/ 27 (C)	0.05074	-0.00547	-0.01227	0.16735	-0.12523	0.06764
66/ 66/ 28 (C)	0.04717	-0.00226	-0.03005	0.06932	-0.33328	0.02802
66/ 66/ 29 (C)	0.13245	-0.00000	-0.04078	0.00000	-0.42756	-0.00000

Bar/Node/Case	FX (kip)	FY (kip)	FZ (kip)	MX (kip-in)	MY (kip-in)	MZ (kip-in)
66/ 66/ 30 (C)	0.18199	-0.00000	-0.05594	0.00000	-0.69306	-0.00000
66/ 66/ 31 (C)	0.13344	-0.01358	-0.07004	0.49205	-0.58108	0.11318
66/ 66/ 32 (C)	0.42712	0.00685	-0.04974	-0.28771	-1.08508	-0.03117
66/ 66/ 33 (C)	-0.21476	-0.02716	0.00820	0.98410	0.96788	0.22636
66/ 66/ 34 (C)	0.37261	0.01370	0.04880	-0.57543	-0.04011	-0.06235
66/ 66/ 35 (C)	0.14647	-0.00781	-0.03591	0.23908	-0.41424	0.09662
66/ 66/ 36 (C)	0.12709	-0.00324	-0.05130	0.09903	-0.69717	0.04002
66/ 66/ 37 (C)	-0.31131	-0.02716	0.03793	0.98410	1.38609	0.22636
66/ 66/ 38 (C)	0.27606	0.01370	0.07853	-0.57543	0.37809	-0.06235
66/ 66/ 39 (C)	0.09082	-0.00781	-0.01878	0.23908	-0.19199	0.09662
66/ 66/ 40 (C)	0.07144	-0.00324	-0.04417	0.09903	-0.47492	0.04002
66/ 66/ 1	0.11144	0.00000	0.04098	0.00000	-1.00497	0.00000
66/ 66/ 2	-15.42933	-0.00000	-5.11333	-0.00000	165.09576	-0.00000
66/ 66/ 3	-15.42933	-0.00000	-5.11333	-0.00000	165.09576	-0.00000
66/ 66/ 4	15.42933	-0.00000	-5.11333	-0.00000	165.09576	-0.00000
66/ 66/ 5	8.10383	0.37916	0.97058	12.22803	-94.52030	5.19108
66/ 66/ 6	-3.62395	-0.56849	-0.11102	-20.94507	12.32555	-4.37318
66/ 66/ 7	-7.90146	0.56867	-1.94062	113.83727	201.48000	-92.48083
66/ 66/ 8	19.07582	0.23555	-4.68508	47.15294	-486.41792	38.30673
66/ 66/ 9 (C)	0.15773	0.00000	0.05632	0.00000	-1.50025	0.00000
66/ 66/ 10 (C)	0.30859	0.00000	0.10227	0.00000	-3.30192	0.00000
66/ 66/ 11 (C)	-0.00608	0.01114	-0.05242	0.35938	-0.16486	0.15257
66/ 66/ 12 (C)	-0.35076	-0.01676	-0.08421	-0.61558	2.97574	-0.12853
66/ 66/ 13 (C)	0.04006	0.00049	0.00984	0.09902	-1.02148	-0.08044
66/ 66/ 14 (C)	-0.01659	0.00119	-0.00408	0.23908	0.42311	-0.19421
66/ 66/ 15 (C)	0.15773	0.00000	0.05632	0.00000	-1.50025	0.00000
66/ 66/ 16 (C)	0.46632	0.00000	0.15859	0.00000	-4.80217	0.00000
66/ 66/ 17 (C)	0.15166	0.01114	0.00360	0.35938	-1.56491	0.15257
66/ 66/ 18 (C)	-0.19302	-0.01676	-0.02789	-0.61558	1.47549	-0.12853
66/ 66/ 19 (C)	0.19779	0.00049	0.06816	0.09902	-2.52173	-0.08044
66/ 66/ 20 (C)	0.14114	0.00119	0.05224	0.23906	-1.07714	-0.19421
66/ 66/ 21 (C)	0.38462	0.00836	0.09371	0.26954	-4.10019	0.11442
66/ 66/ 22 (C)	0.12611	-0.01253	0.05988	-0.46168	-1.74488	-0.09640
66/ 66/ 23 (C)	0.41020	0.00028	0.13818	0.05199	-4.51296	-0.04223
66/ 66/ 24 (C)	0.38046	0.00063	0.13088	0.12551	-3.75456	-0.10196
66/ 66/ 25 (C)	0.08856	0.01114	-0.01863	0.35938	-1.06481	0.15257

Bar/Node/Case	FX (kip)	FY (kip)	FZ (kip)	MX (kip-in)	MY (kip-in)	MZ (kip-in)
66/ 66/ 26 (C)	-0.25612	-0.01671	-0.05042	-0.61558	2.07559	-0.12853
66/ 66/ 27 (C)	0.12268	0.00035	0.04068	0.06931	-1.61519	-0.05631
66/ 66/ 28 (C)	0.08302	0.00084	0.03094	0.16734	-0.60397	-0.13595
66/ 66/ 29 (C)	0.22082	0.00000	0.07885	0.00000	-2.10035	0.00000
66/ 66/ 30 (C)	0.34357	0.00000	0.11872	0.00000	-3.45126	0.00000
66/ 66/ 31 (C)	0.67816	0.00891	0.18927	0.28751	-7.21510	0.12205
66/ 66/ 32 (C)	0.40241	-0.01337	0.16384	-0.49248	-4.70277	-0.10282
66/ 66/ 33 (C)	0.33385	0.01783	0.03485	0.57501	-3.71472	0.24411
66/ 66/ 34 (C)	-0.21764	-0.02673	-0.01601	-0.98492	1.30993	-0.20564
66/ 66/ 35 (C)	0.29105	0.00049	0.09787	0.09902	-3.48216	-0.08044
66/ 66/ 36 (C)	0.23440	0.00119	0.08296	0.23906	-2.03758	-0.19421
66/ 66/ 37 (C)	0.13224	0.01783	-0.03318	0.57501	-1.61369	0.24411
66/ 66/ 38 (C)	-0.41925	-0.02673	-0.08404	-0.98492	3.41096	-0.20564
66/ 66/ 39 (C)	0.16202	0.00049	0.06053	0.09902	-2.37170	-0.08044
66/ 66/ 40 (C)	0.12537	0.00119	0.04661	0.23906	-0.92712	-0.19421
66/ 66/ 1	0.07415	-0.00000	-0.02283	0.00000	-0.20742	-0.00000
66/ 66/ 2	-6.81695	-0.00000	2.09875	-0.00000	32.65852	0.00000
66/ 66/ 3	-6.81695	-0.00000	2.09875	-0.00000	32.65852	0.00000
66/ 66/ 4	-6.81695	-0.00000	2.09875	-0.00000	32.65852	0.00000
66/ 66/ 5	7.69956	-0.29100	1.09567	12.22895	-3.72222	1.32416
66/ 66/ 6	-4.74597	0.57842	0.23411	-20.94672	17.73784	-4.81766
66/ 66/ 7	-2.70239	-3.71931	-3.54186	113.84871	-39.46149	46.01081
66/ 66/ 8	6.52414	-1.54059	8.55081	47.15685	95.26846	19.05830
66/ 66/ 9 (C)	0.09460	0.00000	-0.02913	0.00000	-0.30540	-0.00000
66/ 66/ 10 (C)	0.13634	0.00000	-0.04197	0.00000	0.65317	-0.00000
66/ 66/ 11 (C)	0.11838	-0.00855	0.06542	0.35941	0.40759	0.03892
66/ 66/ 12 (C)	-0.24740	0.01700	0.04010	-0.61562	1.03830	-0.14159
66/ 66/ 13 (C)	0.01370	-0.00324	0.01796	0.09903	0.20006	0.04002
66/ 66/ 14 (C)	-0.00568	-0.00781	-0.00744	0.23908	-0.08287	0.09662
66/ 66/ 15 (C)	0.09460	-0.00000	-0.02913	0.00000	-0.30540	-0.00000
66/ 66/ 16 (C)	0.23094	0.00000	-0.07110	0.00000	-0.95857	-0.00000
66/ 66/ 17 (C)	0.21298	-0.00855	0.03630	0.35941	0.10219	0.03892
66/ 66/ 18 (C)	-0.15279	0.01700	0.01098	-0.61562	0.73290	-0.14159
66/ 66/ 19 (C)	0.10831	-0.00324	-0.01117	0.09903	-0.10533	0.04002
66/ 66/ 20 (C)	0.08893	-0.00781	-0.03656	0.23908	-0.38827	0.09662
66/ 66/ 21 (C)	0.28584	-0.00641	-0.01154	0.26956	-0.48958	0.02919

Bar/Node/Case	FX (kip)	FY (kip)	FZ (kip)	MX (kip-in)	MY (kip-in)	MZ (kip-in)
56/ 65/ 22 (C)	0.01131	0.01275	-0.03053	-0.46172	-0.01655	-0.10619
56/ 65/ 23 (C)	0.20405	-0.00170	-0.05118	0.05199	-0.09024	0.02101
56/ 65/ 24 (C)	0.19388	-0.00410	-0.06451	0.12552	-0.83878	0.05073
56/ 65/ 25 (C)	0.17514	-0.00855	0.04795	0.35941	0.22435	0.03892
56/ 65/ 26 (C)	-0.19063	0.01700	0.02263	-0.61562	0.85500	-0.14158
56/ 65/ 27 (C)	0.06835	-0.00226	-0.00491	0.06932	-0.04319	0.02802
56/ 65/ 28 (C)	0.05279	-0.00547	-0.02268	0.16735	-0.24125	0.06764
56/ 65/ 29 (C)	0.13245	-0.00000	-0.04078	0.00000	-0.42759	-0.00000
56/ 65/ 30 (C)	0.18169	-0.00000	-0.05594	0.00000	-0.69306	-0.00000
56/ 65/ 31 (C)	0.42637	-0.00384	-0.04977	0.28753	-1.08548	0.03113
56/ 65/ 32 (C)	0.13375	0.01360	-0.07003	-0.49253	-0.58091	-0.11327
56/ 65/ 33 (C)	0.37110	-0.01368	0.04874	0.57505	-0.04092	0.06227
56/ 65/ 34 (C)	-0.21414	0.02720	0.00823	-0.98502	0.96822	-0.22655
56/ 65/ 35 (C)	0.15449	-0.00324	-0.02539	0.09903	-0.25705	0.04002
56/ 65/ 36 (C)	0.13512	-0.00781	-0.05078	0.23908	-0.57998	0.06862
56/ 65/ 37 (C)	0.27455	-0.01368	0.07847	0.57505	0.37728	0.06227
56/ 65/ 38 (C)	-0.31069	0.02720	0.03795	-0.98502	1.36643	-0.22655
56/ 65/ 39 (C)	0.09864	-0.00324	-0.00826	0.09903	-0.07479	0.04002
56/ 65/ 40 (C)	0.07947	-0.00781	-0.03363	0.23908	-0.35773	0.06862
57/ 25/ 1	0.22789	0.00802	0.02405	0.0	0.0	0.0
57/ 25/ 2	-73.84803	-5.06909	-15.20726	0.0	0.0	0.0
57/ 25/ 3	-73.84803	-5.06909	-15.20726	0.0	0.0	0.0
57/ 25/ 4	-73.84803	-5.06909	-15.20726	0.0	0.0	0.0
57/ 25/ 5	3.73799	0.0	0.0	0.0	0.0	0.0
57/ 25/ 6	1.85132	0.0	0.0	0.0	0.0	0.0
57/ 25/ 7	11.16455	10.75315	-3.58438	0.0	0.0	0.0
57/ 25/ 8	33.83419	10.75315	-3.58438	0.0	0.0	0.0
57/ 25/ 9 (C)	0.44943	0.02322	0.06967	0.0	0.0	0.0
57/ 25/ 10 (C)	1.47696	0.10138	0.30415	0.0	0.0	0.0
57/ 25/ 11 (C)	-1.05915	-0.08024	-0.24073	0.0	0.0	0.0
57/ 25/ 12 (C)	-1.11460	-0.08024	-0.24073	0.0	0.0	0.0
57/ 25/ 13 (C)	0.07105	0.02258	-0.00753	0.0	0.0	0.0
57/ 25/ 14 (C)	0.02345	0.02258	-0.00753	0.0	0.0	0.0
57/ 25/ 15 (C)	0.44943	0.02322	0.06967	0.0	0.0	0.0
57/ 25/ 16 (C)	1.92640	0.12461	0.37382	0.0	0.0	0.0
57/ 25/ 17 (C)	-0.60972	0.05702	-0.17106	0.0	0.0	0.0

Bar/Node/Case	FX (kip)	FY (kip)	FZ (kip)	MX (kip-in)	MY (kip-in)	MZ (kip-in)
57/ 25/ 18 (C)	-0.66517	-0.05702	-0.17106	0.0	0.0	0.0
57/ 25/ 19 (C)	0.52049	0.04581	0.06215	0.0	0.0	0.0
57/ 25/ 20 (C)	0.47288	0.04581	0.06215	0.0	0.0	0.0
57/ 25/ 21 (C)	0.76279	0.03908	0.11723	0.0	0.0	0.0
57/ 25/ 22 (C)	0.72120	0.03908	0.11723	0.0	0.0	0.0
57/ 25/ 23 (C)	1.59446	0.11112	0.29383	0.0	0.0	0.0
57/ 25/ 24 (C)	1.56946	0.11112	0.29383	0.0	0.0	0.0
57/ 25/ 25 (C)	-0.78949	-0.06631	-0.19893	0.0	0.0	0.0
57/ 25/ 26 (C)	-0.84494	-0.06631	-0.19893	0.0	0.0	0.0
57/ 25/ 27 (C)	0.31940	0.02974	0.03654	0.0	0.0	0.0
57/ 25/ 28 (C)	0.28607	0.02974	0.03654	0.0	0.0	0.0
57/ 25/ 29 (C)	0.62921	0.03251	0.09754	0.0	0.0	0.0
57/ 25/ 30 (C)	1.27780	0.07856	0.23568	0.0	0.0	0.0
57/ 25/ 31 (C)	2.05513	0.12589	0.37766	0.0	0.0	0.0
57/ 25/ 32 (C)	2.01078	0.12589	0.37766	0.0	0.0	0.0
57/ 25/ 33 (C)	-0.41685	0.04983	0.14949	0.0	0.0	0.0
57/ 25/ 34 (C)	-0.50556	0.04983	0.14949	0.0	0.0	0.0
57/ 25/ 35 (C)	0.85816	-0.07073	0.13691	0.0	0.0	0.0
57/ 25/ 36 (C)	0.90577	-0.07073	-0.13691	0.0	0.0	0.0
57/ 25/ 37 (C)	-1.29016	0.10749	0.32246	0.0	0.0	0.0
57/ 25/ 38 (C)	-1.37886	0.10749	0.32246	0.0	0.0	0.0
57/ 25/ 39 (C)	0.42794	-0.04348	-0.05518	0.0	0.0	0.0
57/ 25/ 40 (C)	0.47554	-0.04348	-0.05518	0.0	0.0	0.0
57/ 26/ 1	0.22789	0.00802	0.02405	0.0	0.0	0.0
57/ 26/ 2	-73.84803	-5.06909	-15.20726	0.0	0.0	0.0
57/ 26/ 3	-73.84803	-5.06909	-15.20726	0.0	0.0	0.0
57/ 26/ 4	-73.84803	-5.06909	-15.20726	0.0	0.0	0.0
57/ 26/ 5	3.73799	0.0	0.0	0.0	0.0	0.0
57/ 26/ 6	1.85132	0.0	0.0	0.0	0.0	0.0
57/ 26/ 7	33.83419	-10.75315	3.58438	0.0	0.0	0.0
57/ 26/ 8	11.16455	-10.75315	3.58438	0.0	0.0	0.0
57/ 26/ 9 (C)	0.44943	-0.02322	-0.06967	0.0	0.0	0.0
57/ 26/ 10 (C)	1.47696	-0.10138	-0.30415	0.0	0.0	0.0
57/ 26/ 11 (C)	-1.05915	0.08024	0.24073	0.0	0.0	0.0
57/ 26/ 12 (C)	-1.11460	0.08024	0.24073	0.0	0.0	0.0
57/ 26/ 13 (C)	0.02345	-0.02258	0.00753	0.0	0.0	0.0

Bar/Node/Case	FX (kip)	FY (kip)	FZ (kip)	MX (kip-in)	MY (kip-in)	MZ (kip-in)
57/ 26/ 14 (C)	0.07105	-0.02258	0.00753	0.0	0.0	0.0
57/ 26/ 15 (C)	0.44943	-0.02322	-0.06967	0.0	0.0	0.0
57/ 26/ 16 (C)	1.92640	-0.12461	-0.37382	0.0	0.0	0.0
57/ 26/ 17 (C)	-0.60972	0.05702	0.17106	0.0	0.0	0.0
57/ 26/ 18 (C)	-0.66517	0.05702	0.17106	0.0	0.0	0.0
57/ 26/ 19 (C)	0.47289	0.04581	-0.06215	0.0	0.0	0.0
57/ 26/ 20 (C)	0.52049	-0.04581	-0.06215	0.0	0.0	0.0
57/ 26/ 21 (C)	0.76279	-0.03908	-0.11723	0.0	0.0	0.0
57/ 26/ 22 (C)	0.72120	-0.03908	-0.11723	0.0	0.0	0.0
57/ 26/ 23 (C)	1.56946	-0.11112	-0.29383	0.0	0.0	0.0
57/ 26/ 24 (C)	1.59446	-0.11112	-0.29383	0.0	0.0	0.0
57/ 26/ 25 (C)	-0.78949	0.06631	0.19893	0.0	0.0	0.0
57/ 26/ 26 (C)	-0.84494	0.06631	0.19893	0.0	0.0	0.0
57/ 26/ 27 (C)	0.28607	-0.02974	0.03654	0.0	0.0	0.0
57/ 26/ 28 (C)	0.31940	-0.02974	-0.03654	0.0	0.0	0.0
57/ 26/ 29 (C)	0.62921	-0.03251	-0.09754	0.0	0.0	0.0
57/ 26/ 30 (C)	1.27780	-0.07856	-0.23568	0.0	0.0	0.0
57/ 26/ 31 (C)	2.05513	-0.12589	-0.37766	0.0	0.0	0.0
57/ 26/ 32 (C)	2.01078	-0.12589	-0.37766	0.0	0.0	0.0
57/ 26/ 33 (C)	-0.41685	0.04983	0.14949	0.0	0.0	0.0
57/ 26/ 34 (C)	-0.50556	0.04983	0.14949	0.0	0.0	0.0
57/ 26/ 35 (C)	0.85816	-0.07073	0.13691	0.0	0.0	0.0
57/ 26/ 36 (C)	0.90577	-0.07073	-0.13691	0.0	0.0	0.0
57/ 26/ 37 (C)	-1.29016	0.10749	0.32246	0.0	0.0	0.0
57/ 26/ 38 (C)	-1.37886	0.10749	0.32246	0.0	0.0	0.0
57/ 26/ 39 (C)	0.42794	-0.04348	-0.05518	0.0	0.0	0.0
57/ 26/ 40 (C)	0.47554	-0.04348	-0.05518	0.0	0.0	0.0
58/ 26/ 1	0.22789	0.00802	0.02405	0.0	0.0	0.0
58/ 26/ 2	-73.84803	-5.06909	-15.20726	0.0	0.0	0.0
58/ 26/ 3	-73.84803	-5.06909	-15.20726	0.0	0.0	0.0
58/ 26/ 4	-73.84803	-5.06909	-15.20726	0.0	0.0	0.0
58/ 26/ 5	4.11798	0.0	0.0	0.0	0.0	0.0
58/ 26/ 6	-0.81856	0.0	0.0	0.0	0.0	0.0
58/ 26/ 7	31.81891	15.20726	-5.06909	0.0	0.0	0.0
58/ 26/ 8	18.02985	0.0	0.0	0.0	0.0	0.0
58/ 26/ 9 (C)	0.44943	0.02322	0.06967	0.0	0.0	0.0

Bar/Node/Case	FX (kip)	FY (kip)	FZ (kip)	MX (kip-in)	MY (kip-in)	MZ (kip-in)
58/ 26/ 10 (C)	1.47696	0.10138	0.30415	0.0	0.0	0.0
58/ 26/ 11 (C)	-1.04799	-0.08024	-0.24073	0.0	0.0	0.0
58/ 26/ 12 (C)	-1.19307	-0.08024	-0.24073	0.0	0.0	0.0
58/ 26/ 13 (C)	0.02368	0.0	0.0	0.0	0.0	0.0
58/ 26/ 14 (C)	0.06882	0.03194	-0.01065	0.0	0.0	0.0
58/ 26/ 15 (C)	0.44943	0.02322	0.06967	0.0	0.0	0.0
58/ 26/ 16 (C)	1.92640	0.12461	0.37382	0.0	0.0	0.0
58/ 26/ 17 (C)	-0.59855	-0.05702	-0.17106	0.0	0.0	0.0
58/ 26/ 18 (C)	-0.74364	-0.05702	-0.17106	0.0	0.0	0.0
58/ 26/ 19 (C)	0.48310	0.02322	0.06967	0.0	0.0	0.0
58/ 26/ 20 (C)	0.51625	0.05518	0.05903	0.0	0.0	0.0
58/ 26/ 21 (C)	0.77118	0.03908	0.11723	0.0	0.0	0.0
58/ 26/ 22 (C)	0.66235	0.03908	0.11723	0.0	0.0	0.0
58/ 26/ 23 (C)	1.57483	0.09926	0.29778	0.0	0.0	0.0
58/ 26/ 24 (C)	1.59224	0.11603	0.29219	0.0	0.0	0.0
58/ 26/ 25 (C)	-0.77833	-0.06631	-0.19893	0.0	0.0	0.0
58/ 26/ 26 (C)	-0.92341	-0.06631	-0.19893	0.0	0.0	0.0
58/ 26/ 27 (C)	0.29322	0.01393	0.04180	0.0	0.0	0.0
58/ 26/ 28 (C)	0.31643	0.03629	0.03435	0.0	0.0	0.0
58/ 26/ 29 (C)	0.62921	0.03251	0.09754	0.0	0.0	0.0
58/ 26/ 30 (C)	1.27780	0.07856	0.23568	0.0	0.0	0.0
58/ 26/ 31 (C)	2.00407	0.12589	0.37766	0.0	0.0	0.0
58/ 26/ 32 (C)	1.94800	0.12589	0.37766	0.0	0.0	0.0
58/ 26/ 33 (C)	-0.39898	-0.04983	-0.14949	0.0	0.0	0.0
58/ 26/ 34 (C)	-0.63112	-0.04983	-0.14949	0.0	0.0	0.0
58/ 26/ 35 (C)	0.86838	0.04815	0.14444	0.0	0.0	0.0
58/ 26/ 36 (C)	0.90153	0.08008	0.13379	0.0	0.0	0.0
58/ 26/ 37 (C)	-1.27229	-0.10749	-0.32246	0.0	0.0	0.0
58/ 26/ 38 (C)	-1.50443	-0.10749	-0.32246	0.0	0.0	0.0
58/ 26/ 39 (C)	0.43815	0.02090	0.06271	0.0	0.0	0.0
58/ 26/ 40 (C)	0.47131	0.05284	0.05206	0.0	0.0	0.0
58/ 27/ 1	0.22789	-0.00802	-0.02405	0.0	0.0	0.0
58/ 27/ 2	-73.84803	5.06909	15.20726	0.0	0.0	0.0
58/ 27/ 3	-73.84803	5.06909	15.20726	0.0	0.0	0.0
58/ 27/ 4	-73.84803	5.06909	15.20726	0.0	0.0	0.0
58/ 27/ 5	4.11798	0.0	0.0	0.0	0.0	0.0

Bar/Node/Case	FX (kip)	FY (kip)	FZ (kip)	MX (kip-in)	MY (kip-in)	MZ (kip-in)
59/ 27/ 6	-0.81866	0.0	0.0	0.0	0.0	0.0
59/ 27/ 7	31.81891	-15.20726	5.06909	0.0	0.0	0.0
59/ 27/ 8	16.02985	0.0	0.0	0.0	0.0	0.0
59/ 27/ 9 (C)	0.44943	-0.02322	-0.06967	0.0	0.0	0.0
59/ 27/ 10 (C)	1.47696	-0.10138	-0.30415	0.0	0.0	0.0
59/ 27/ 11 (C)	-1.04799	0.08024	0.24073	0.0	0.0	0.0
59/ 27/ 12 (C)	-1.19307	0.08024	0.24073	0.0	0.0	0.0
59/ 27/ 13 (C)	-0.03366	0.0	0.0	0.0	0.0	0.0
59/ 27/ 14 (C)	0.06682	-0.03194	0.01065	0.0	0.0	0.0
59/ 27/ 15 (C)	0.44943	-0.02322	-0.06967	0.0	0.0	0.0
59/ 27/ 16 (C)	1.92640	-0.12461	-0.37382	0.0	0.0	0.0
59/ 27/ 17 (C)	-0.59855	0.05702	0.17106	0.0	0.0	0.0
59/ 27/ 18 (C)	-0.74364	0.05702	0.17106	0.0	0.0	0.0
59/ 27/ 19 (C)	0.41577	-0.02322	-0.06967	0.0	0.0	0.0
59/ 27/ 20 (C)	0.51625	-0.05518	-0.05903	0.0	0.0	0.0
59/ 27/ 21 (C)	0.77116	-0.03908	-0.11723	0.0	0.0	0.0
59/ 27/ 22 (C)	0.66235	-0.03908	-0.11723	0.0	0.0	0.0
59/ 27/ 23 (C)	1.53948	-0.09928	-0.29778	0.0	0.0	0.0
59/ 27/ 24 (C)	1.59224	-0.11603	-0.29219	0.0	0.0	0.0
59/ 27/ 25 (C)	-0.77833	0.06631	0.19893	0.0	0.0	0.0
59/ 27/ 26 (C)	-0.92341	0.06631	0.19893	0.0	0.0	0.0
59/ 27/ 27 (C)	0.24610	-0.01393	-0.04180	0.0	0.0	0.0
59/ 27/ 28 (C)	0.31643	-0.03629	-0.03435	0.0	0.0	0.0
59/ 27/ 29 (C)	0.62921	-0.03251	-0.09754	0.0	0.0	0.0
59/ 27/ 30 (C)	1.27780	-0.07856	-0.23568	0.0	0.0	0.0
59/ 27/ 31 (C)	2.06407	-0.12589	-0.37766	0.0	0.0	0.0
59/ 27/ 32 (C)	1.94800	-0.12589	-0.37766	0.0	0.0	0.0
59/ 27/ 33 (C)	-0.39898	0.04983	0.14949	0.0	0.0	0.0
59/ 27/ 34 (C)	-0.63112	0.04983	0.14949	0.0	0.0	0.0
59/ 27/ 35 (C)	0.80105	-0.04815	-0.14444	0.0	0.0	0.0
59/ 27/ 36 (C)	0.90153	-0.08008	-0.13379	0.0	0.0	0.0
59/ 27/ 37 (C)	-1.27229	0.10749	0.32246	0.0	0.0	0.0
59/ 27/ 38 (C)	-1.50443	0.10749	0.32246	0.0	0.0	0.0
59/ 27/ 39 (C)	0.37083	-0.02090	-0.06271	0.0	0.0	0.0
59/ 27/ 40 (C)	0.47131	-0.05284	-0.05206	0.0	0.0	0.0
59/ 27/ 1	0.22789	0.00802	0.02405	0.0	0.0	0.0

Bar/Node/Case	FX (kip)	FY (kip)	FZ (kip)	MX (kip-in)	MY (kip-in)	MZ (kip-in)
59/ 27/ 2	-73.84803	-5.06909	15.20726	0.0	0.0	0.0
59/ 27/ 3	-73.84803	-5.06909	15.20726	0.0	0.0	0.0
59/ 27/ 4	-73.84803	-5.06909	15.20726	0.0	0.0	0.0
59/ 27/ 5	1.85280	0.0	0.0	0.0	0.0	0.0
59/ 27/ 6	1.85132	0.0	0.0	0.0	0.0	0.0
59/ 27/ 7	33.83419	10.75315	-3.58438	0.0	0.0	0.0
59/ 27/ 8	-11.16455	-10.75315	3.58438	0.0	0.0	0.0
59/ 27/ 9 (C)	0.44943	0.02322	0.06967	0.0	0.0	0.0
59/ 27/ 10 (C)	1.47696	0.10138	0.30415	0.0	0.0	0.0
59/ 27/ 11 (C)	-1.11456	-0.08024	-0.24073	0.0	0.0	0.0
59/ 27/ 12 (C)	-1.11460	-0.08024	-0.24073	0.0	0.0	0.0
59/ 27/ 13 (C)	-0.02346	-0.02258	0.00753	0.0	0.0	0.0
59/ 27/ 14 (C)	0.07105	0.02258	-0.00753	0.0	0.0	0.0
59/ 27/ 15 (C)	0.44943	0.02322	0.06967	0.0	0.0	0.0
59/ 27/ 16 (C)	1.92640	0.12461	0.37382	0.0	0.0	0.0
59/ 27/ 17 (C)	-0.66513	-0.05702	-0.17106	0.0	0.0	0.0
59/ 27/ 18 (C)	-0.66517	-0.05702	-0.17106	0.0	0.0	0.0
59/ 27/ 19 (C)	0.42599	0.00064	0.07720	0.0	0.0	0.0
59/ 27/ 20 (C)	0.52049	0.04561	0.06215	0.0	0.0	0.0
59/ 27/ 21 (C)	0.72123	0.03908	0.11723	0.0	0.0	0.0
59/ 27/ 22 (C)	0.72120	0.03908	0.11723	0.0	0.0	0.0
59/ 27/ 23 (C)	1.54485	0.08741	0.30173	0.0	0.0	0.0
59/ 27/ 24 (C)	1.59446	0.11112	0.29383	0.0	0.0	0.0
59/ 27/ 25 (C)	-0.84490	-0.06631	-0.19893	0.0	0.0	0.0
59/ 27/ 26 (C)	-0.84494	-0.06631	-0.19893	0.0	0.0	0.0
59/ 27/ 27 (C)	0.25325	-0.00187	0.04707	0.0	0.0	0.0
59/ 27/ 28 (C)	0.31940	0.02974	0.03654	0.0	0.0	0.0
59/ 27/ 29 (C)	0.62921	0.03251	0.09754	0.0	0.0	0.0
59/ 27/ 30 (C)	1.27780	0.07856	0.23568	0.0	0.0	0.0
59/ 27/ 31 (C)	2.01081	0.12589	0.37766	0.0	0.0	0.0
59/ 27/ 32 (C)	2.01078	0.12589	0.37766	0.0	0.0	0.0
59/ 27/ 33 (C)	-0.50549	-0.04983	-0.14949	0.0	0.0	0.0
59/ 27/ 34 (C)	-0.50556	-0.04983	-0.14949	0.0	0.0	0.0
59/ 27/ 35 (C)	0.81127	0.02556	0.15197	0.0	0.0	0.0
59/ 27/ 36 (C)	0.90577	0.07073	0.13691	0.0	0.0	0.0
59/ 27/ 37 (C)	-1.37881	-0.10749	-0.32246	0.0	0.0	0.0

Bar/Node/Case	FX (kip)	FY (kip)	FZ (kip)	MX (kip-in)	MY (kip-in)	MZ (kip-in)
59/ 27/ 39 (C)	-1.37888	-0.10749	-0.32246	0.0	0.0	0.0
59/ 27/ 39 (C)	0.38105	-0.00168	0.07023	0.0	0.0	0.0
59/ 27/ 40 (C)	0.47554	0.04348	0.05518	0.0	0.0	0.0
59/ 28/ 1	0.22789	-0.00802	-0.02405	0.0	0.0	0.0
59/ 28/ 2	-73.84803	5.06909	15.20726	0.0	0.0	0.0
59/ 28/ 3	-73.84803	5.06909	15.20726	0.0	0.0	0.0
59/ 28/ 4	-73.84803	5.06909	15.20726	0.0	0.0	0.0
59/ 28/ 5	1.85280	0.0	0.0	0.0	0.0	0.0
59/ 28/ 6	1.85132	0.0	0.0	0.0	0.0	0.0
59/ 28/ 7	11.16455	-10.75315	3.58438	0.0	0.0	0.0
59/ 28/ 8	-33.83419	10.75315	-3.58438	0.0	0.0	0.0
59/ 28/ 9 (C)	0.44943	-0.02322	-0.06967	0.0	0.0	0.0
59/ 28/ 10 (C)	1.47696	-0.10138	-0.30415	0.0	0.0	0.0
59/ 28/ 11 (C)	-1.11456	0.08024	0.24073	0.0	0.0	0.0
59/ 28/ 12 (C)	-1.11460	0.08024	0.24073	0.0	0.0	0.0
59/ 28/ 13 (C)	-0.07105	0.02258	-0.00753	0.0	0.0	0.0
59/ 28/ 14 (C)	0.02346	-0.02258	0.00753	0.0	0.0	0.0
59/ 28/ 15 (C)	0.44943	-0.02322	-0.06967	0.0	0.0	0.0
59/ 28/ 16 (C)	1.92640	-0.12461	-0.37382	0.0	0.0	0.0
59/ 28/ 17 (C)	-0.66513	0.05702	0.17106	0.0	0.0	0.0
59/ 28/ 18 (C)	-0.66517	0.05702	0.17106	0.0	0.0	0.0
59/ 28/ 19 (C)	0.37838	-0.00064	-0.07720	0.0	0.0	0.0
59/ 28/ 20 (C)	0.47288	-0.04561	-0.06215	0.0	0.0	0.0
59/ 28/ 21 (C)	0.72123	-0.03908	-0.11723	0.0	0.0	0.0
59/ 28/ 22 (C)	0.72120	-0.03908	-0.11723	0.0	0.0	0.0
59/ 28/ 23 (C)	1.51985	-0.08741	-0.30173	0.0	0.0	0.0
59/ 28/ 24 (C)	1.56946	-0.11112	-0.29383	0.0	0.0	0.0
59/ 28/ 25 (C)	-0.84490	0.06631	0.19893	0.0	0.0	0.0
59/ 28/ 26 (C)	-0.84494	0.06631	0.19893	0.0	0.0	0.0
59/ 28/ 27 (C)	0.21992	0.00187	-0.04707	0.0	0.0	0.0
59/ 28/ 28 (C)	0.28607	-0.02974	-0.03654	0.0	0.0	0.0
59/ 28/ 29 (C)	0.62921	-0.03251	-0.09754	0.0	0.0	0.0
59/ 28/ 30 (C)	1.27780	-0.07856	-0.23568	0.0	0.0	0.0
59/ 28/ 31 (C)	2.01081	-0.12589	-0.37766	0.0	0.0	0.0
59/ 28/ 32 (C)	2.01078	-0.12589	-0.37766	0.0	0.0	0.0
59/ 28/ 33 (C)	-0.50549	0.04983	0.14949	0.0	0.0	0.0

Bar/Node/Case	FX (kip)	FY (kip)	FZ (kip)	MX (kip-in)	MY (kip-in)	MZ (kip-in)
59/ 28/ 34 (C)	-0.50556	0.04983	0.14949	0.0	0.0	0.0
59/ 28/ 35 (C)	0.76366	-0.02556	-0.15197	0.0	0.0	0.0
59/ 28/ 36 (C)	0.85816	-0.07073	-0.13691	0.0	0.0	0.0
59/ 28/ 37 (C)	-1.27881	0.10749	0.32246	0.0	0.0	0.0
59/ 28/ 38 (C)	-1.27888	0.10749	0.32246	0.0	0.0	0.0
59/ 28/ 39 (C)	0.33344	0.00168	-0.07023	0.0	0.0	0.0
59/ 28/ 40 (C)	0.42794	-0.04348	-0.05518	0.0	0.0	0.0
60/ 28/ 1	0.22789	0.00802	0.02405	0.0	0.0	0.0
60/ 28/ 2	-73.84803	-5.06909	-15.20726	0.0	0.0	0.0
60/ 28/ 3	-73.84803	-5.06909	-15.20726	0.0	0.0	0.0
60/ 28/ 4	-73.84803	-5.06909	-15.20726	0.0	0.0	0.0
60/ 28/ 5	-0.81656	0.0	0.0	0.0	0.0	0.0
60/ 28/ 6	4.11796	0.0	0.0	0.0	0.0	0.0
60/ 28/ 7	16.02985	0.0	0.0	0.0	0.0	0.0
60/ 28/ 8	-31.81891	-15.20726	5.06909	0.0	0.0	0.0
60/ 28/ 9 (C)	0.44943	0.02322	0.06967	0.0	0.0	0.0
60/ 28/ 10 (C)	1.47696	0.10138	0.30415	0.0	0.0	0.0
60/ 28/ 11 (C)	-1.19301	-0.08024	-0.24073	0.0	0.0	0.0
60/ 28/ 12 (C)	-1.04799	-0.08024	-0.24073	0.0	0.0	0.0
60/ 28/ 13 (C)	-0.06682	-0.03194	0.01065	0.0	0.0	0.0
60/ 28/ 14 (C)	0.03366	0.0	0.0	0.0	0.0	0.0
60/ 28/ 15 (C)	0.44943	0.02322	0.06967	0.0	0.0	0.0
60/ 28/ 16 (C)	1.92640	0.12461	0.37382	0.0	0.0	0.0
60/ 28/ 17 (C)	-0.74358	-0.05702	-0.17106	0.0	0.0	0.0
60/ 28/ 18 (C)	0.59855	-0.05702	-0.17106	0.0	0.0	0.0
60/ 28/ 19 (C)	0.38261	-0.00871	0.08032	0.0	0.0	0.0
60/ 28/ 20 (C)	0.48310	0.02322	0.06967	0.0	0.0	0.0
60/ 28/ 21 (C)	0.66240	0.03908	0.11723	0.0	0.0	0.0
60/ 28/ 22 (C)	0.77116	0.03908	0.11723	0.0	0.0	0.0
60/ 28/ 23 (C)	1.52207	0.08250	0.30337	0.0	0.0	0.0
60/ 28/ 24 (C)	1.57483	0.09976	0.29778	0.0	0.0	0.0
60/ 28/ 25 (C)	-0.92335	-0.06631	-0.19893	0.0	0.0	0.0
60/ 28/ 26 (C)	-0.77633	-0.06631	-0.19893	0.0	0.0	0.0
60/ 28/ 27 (C)	0.22289	-0.00842	0.04926	0.0	0.0	0.0
60/ 28/ 28 (C)	0.29322	0.01393	0.04180	0.0	0.0	0.0
60/ 28/ 29 (C)	0.62921	0.03251	0.09754	0.0	0.0	0.0

Bar/Node/Case	FX (kip)	FY (kip)	FZ (kip)	MX (kip-in)	MY (kip-in)	MZ (kip-in)
60/ 28/ 30 (C)	1.27780	0.07856	0.23568	0.0	0.0	0.0
60/ 28/ 31 (C)	1.94805	0.12589	0.37766	0.0	0.0	0.0
60/ 28/ 32 (C)	2.06407	0.12589	0.37766	0.0	0.0	0.0
60/ 28/ 33 (C)	-0.83102	-0.04983	-0.14949	0.0	0.0	0.0
60/ 28/ 34 (C)	-0.39896	-0.04983	-0.14949	0.0	0.0	0.0
60/ 28/ 35 (C)	0.76789	0.01621	0.15508	0.0	0.0	0.0
60/ 28/ 36 (C)	0.86836	0.04815	0.14444	0.0	0.0	0.0
60/ 28/ 37 (C)	-1.50433	-0.10749	-0.32246	0.0	0.0	0.0
60/ 28/ 38 (C)	-1.27229	-0.10749	-0.32246	0.0	0.0	0.0
60/ 28/ 39 (C)	0.33767	-0.01103	0.07335	0.0	0.0	0.0
60/ 28/ 40 (C)	0.43815	0.02090	0.06271	0.0	0.0	0.0
60/ 29/ 1	0.22789	-0.00802	-0.02405	0.0	0.0	0.0
60/ 29/ 2	-73.84803	5.06909	15.20726	0.0	0.0	0.0
60/ 29/ 3	-73.84803	5.06909	15.20726	0.0	0.0	0.0
60/ 29/ 4	-73.84803	5.06909	15.20726	0.0	0.0	0.0
60/ 29/ 5	-0.81656	0.0	0.0	0.0	0.0	0.0
60/ 29/ 6	4.11796	0.0	0.0	0.0	0.0	0.0
60/ 29/ 7	16.02985	0.0	0.0	0.0	0.0	0.0
60/ 29/ 8	-31.81891	15.20726	-5.06909	0.0	0.0	0.0
60/ 29/ 9 (C)	0.44943	-0.02322	-0.06967	0.0	0.0	0.0
60/ 29/ 10 (C)	1.47696	-0.10138	-0.30415	0.0	0.0	0.0
60/ 29/ 11 (C)	-1.19301	0.08024	0.24073	0.0	0.0	0.0
60/ 29/ 12 (C)	-1.04799	0.08024	0.24073	0.0	0.0	0.0
60/ 29/ 13 (C)	-0.06682	0.03192	-0.01065	0.0	0.0	0.0
60/ 29/ 14 (C)	-0.03366	0.0	0.0	0.0	0.0	0.0
60/ 29/ 15 (C)	0.44943	-0.02322	-0.06967	0.0	0.0	0.0
60/ 29/ 16 (C)	1.92640	-0.12461	-0.37382	0.0	0.0	0.0
60/ 29/ 17 (C)	-0.74358	0.05702	0.17106	0.0	0.0	0.0
60/ 29/ 18 (C)	-0.59855	0.05702	0.17106	0.0	0.0	0.0
60/ 29/ 19 (C)	0.38261	0.00871	-0.08032	0.0	0.0	0.0
60/ 29/ 20 (C)	0.41577	-0.02322	0.06967	0.0	0.0	0.0
60/ 29/ 21 (C)	0.66240	-0.03908	-0.11723	0.0	0.0	0.0
60/ 29/ 22 (C)	0.77116	-0.03908	-0.11723	0.0	0.0	0.0
60/ 29/ 23 (C)	1.52207	-0.08250	-0.30337	0.0	0.0	0.0
60/ 29/ 24 (C)	1.53948	-0.09926	-0.29778	0.0	0.0	0.0
60/ 29/ 25 (C)	-0.92335	0.06631	0.19893	0.0	0.0	0.0

Bar/Node/Case	FX (kip)	FY (kip)	FZ (kip)	MX (kip-in)	MY (kip-in)	MZ (kip-in)
60/ 29/ 26 (C)	-0.77833	0.06631	0.19893	0.0	0.0	0.0
60/ 29/ 27 (C)	0.22289	0.00842	-0.04926	0.0	0.0	0.0
60/ 29/ 28 (C)	0.24610	-0.01393	-0.04186	0.0	0.0	0.0
60/ 29/ 29 (C)	0.82921	-0.03251	-0.09754	0.0	0.0	0.0
60/ 29/ 30 (C)	1.27780	-0.07856	-0.23568	0.0	0.0	0.0
60/ 29/ 31 (C)	1.94805	-0.12589	-0.37766	0.0	0.0	0.0
60/ 29/ 32 (C)	2.06407	-0.12589	-0.37766	0.0	0.0	0.0
60/ 29/ 33 (C)	-0.83102	0.04983	0.14949	0.0	0.0	0.0
60/ 29/ 34 (C)	-0.39896	0.04983	0.14949	0.0	0.0	0.0
60/ 29/ 35 (C)	0.76789	-0.01621	-0.15508	0.0	0.0	0.0
60/ 29/ 36 (C)	0.80105	-0.04815	-0.14444	0.0	0.0	0.0
60/ 29/ 37 (C)	-1.50433	0.10749	0.32246	0.0	0.0	0.0
60/ 29/ 38 (C)	-1.27229	0.10749	0.32246	0.0	0.0	0.0
60/ 29/ 39 (C)	0.33767	0.01103	-0.07335	0.0	0.0	0.0
60/ 29/ 40 (C)	0.37083	-0.02090	-0.06271	0.0	0.0	0.0
61/ 29/ 1	0.22789	0.00802	0.02405	0.0	0.0	0.0
61/ 29/ 2	-73.84803	-5.06909	-15.20726	0.0	0.0	0.0
61/ 29/ 3	-73.84803	-5.06909	-15.20726	0.0	0.0	0.0
61/ 29/ 4	-73.84803	-5.06909	-15.20726	0.0	0.0	0.0
61/ 29/ 5	1.85280	0.0	0.0	0.0	0.0	0.0
61/ 29/ 6	3.73948	0.0	0.0	0.0	0.0	0.0
61/ 29/ 7	-11.16455	-10.75315	3.58438	0.0	0.0	0.0
61/ 29/ 8	-33.83419	-10.75315	3.58438	0.0	0.0	0.0
61/ 29/ 9 (C)	0.44943	0.02322	0.06967	0.0	0.0	0.0
61/ 29/ 10 (C)	1.47696	0.10138	0.30415	0.0	0.0	0.0
61/ 29/ 11 (C)	-1.11456	-0.08024	-0.24073	0.0	0.0	0.0
61/ 29/ 12 (C)	-1.05911	-0.08024	-0.24073	0.0	0.0	0.0
61/ 29/ 13 (C)	-0.07105	-0.02258	0.00753	0.0	0.0	0.0
61/ 29/ 14 (C)	-0.02345	-0.02258	0.00753	0.0	0.0	0.0
61/ 29/ 15 (C)	0.44943	0.02322	0.06967	0.0	0.0	0.0
61/ 29/ 16 (C)	1.92640	0.12461	0.37382	0.0	0.0	0.0
61/ 29/ 17 (C)	-0.66513	-0.05702	-0.17106	0.0	0.0	0.0
61/ 29/ 18 (C)	-0.60968	-0.05702	-0.17106	0.0	0.0	0.0
61/ 29/ 19 (C)	0.37838	0.00064	0.07720	0.0	0.0	0.0
61/ 29/ 20 (C)	0.42599	0.00064	0.07720	0.0	0.0	0.0
61/ 29/ 21 (C)	0.72123	0.03908	0.11723	0.0	0.0	0.0

Bar/Node/Case	FX (kip)	FY (kip)	FZ (kip)	MX (kip-in)	MY (kip-in)	MZ (kip-in)
61/ 29/ 22 (C)	0.76282	0.03908	0.11723	0.0	0.0	0.0
61/ 29/ 23 (C)	1.51985	0.08741	0.30173	0.0	0.0	0.0
61/ 29/ 24 (C)	1.54485	0.08741	0.30173	0.0	0.0	0.0
61/ 29/ 25 (C)	-0.84490	-0.06631	-0.19893	0.0	0.0	0.0
61/ 29/ 26 (C)	-0.78945	-0.06631	-0.19893	0.0	0.0	0.0
61/ 29/ 27 (C)	0.21992	-0.00187	0.04707	0.0	0.0	0.0
61/ 29/ 28 (C)	0.25325	-0.00187	0.04707	0.0	0.0	0.0
61/ 29/ 29 (C)	0.82921	0.03251	0.09754	0.0	0.0	0.0
61/ 29/ 30 (C)	1.27780	0.07856	0.23568	0.0	0.0	0.0
61/ 29/ 31 (C)	2.01081	0.12589	0.37766	0.0	0.0	0.0
61/ 29/ 32 (C)	2.05517	0.12589	0.37766	0.0	0.0	0.0
61/ 29/ 33 (C)	-0.50549	-0.04983	-0.14949	0.0	0.0	0.0
61/ 29/ 34 (C)	-0.41678	-0.04983	-0.14949	0.0	0.0	0.0
61/ 29/ 35 (C)	0.76366	0.02556	0.15197	0.0	0.0	0.0
61/ 29/ 36 (C)	0.81127	0.02556	0.15197	0.0	0.0	0.0
61/ 29/ 37 (C)	-1.37881	-0.10749	-0.32246	0.0	0.0	0.0
61/ 29/ 38 (C)	-1.29009	-0.10749	-0.32246	0.0	0.0	0.0
61/ 29/ 39 (C)	0.33344	-0.00168	0.07023	0.0	0.0	0.0
61/ 29/ 40 (C)	0.38105	-0.00168	0.07023	0.0	0.0	0.0
61/ 30/ 1	0.22789	-0.00802	0.02405	0.0	0.0	0.0
61/ 30/ 2	-73.84803	5.06909	15.20726	0.0	0.0	0.0
61/ 30/ 3	-73.84803	5.06909	15.20726	0.0	0.0	0.0
61/ 30/ 4	-73.84803	5.06909	15.20726	0.0	0.0	0.0
61/ 30/ 5	1.85280	0.0	0.0	0.0	0.0	0.0
61/ 30/ 6	3.73948	0.0	0.0	0.0	0.0	0.0
61/ 30/ 7	-33.83419	10.75315	-3.58438	0.0	0.0	0.0
61/ 30/ 8	-11.16455	10.75315	-3.58438	0.0	0.0	0.0
61/ 30/ 9 (C)	0.44943	-0.02322	0.06967	0.0	0.0	0.0
61/ 30/ 10 (C)	1.47696	-0.10138	0.30415	0.0	0.0	0.0
61/ 30/ 11 (C)	-1.11456	0.08024	0.24073	0.0	0.0	0.0
61/ 30/ 12 (C)	-1.05911	0.08024	0.24073	0.0	0.0	0.0
61/ 30/ 13 (C)	-0.02345	0.02258	-0.00753	0.0	0.0	0.0
61/ 30/ 14 (C)	-0.07105	0.02258	-0.00753	0.0	0.0	0.0
61/ 30/ 15 (C)	0.44943	-0.02322	-0.06967	0.0	0.0	0.0
61/ 30/ 16 (C)	1.92640	-0.12461	-0.37382	0.0	0.0	0.0
61/ 30/ 17 (C)	-0.66513	0.05702	0.17106	0.0	0.0	0.0

Bar/Node/Case	FX (kip)	FY (kip)	FZ (kip)	MX (kip-in)	MY (kip-in)	MZ (kip-in)
61/ 30/ 18 (C)	-0.60968	0.05702	0.17106	0.0	0.0	0.0
61/ 30/ 19 (C)	0.42599	-0.00064	-0.07720	0.0	0.0	0.0
61/ 30/ 20 (C)	0.37838	-0.00064	-0.07720	0.0	0.0	0.0
61/ 30/ 21 (C)	0.72123	-0.03908	-0.11723	0.0	0.0	0.0
61/ 30/ 22 (C)	0.76282	-0.03908	-0.11723	0.0	0.0	0.0
61/ 30/ 23 (C)	1.54485	-0.08741	-0.30173	0.0	0.0	0.0
61/ 30/ 24 (C)	1.51985	-0.08741	-0.30173	0.0	0.0	0.0
61/ 30/ 25 (C)	-0.84490	0.06631	0.19893	0.0	0.0	0.0
61/ 30/ 26 (C)	-0.78945	0.06631	0.19893	0.0	0.0	0.0
61/ 30/ 27 (C)	0.25325	0.00187	-0.04707	0.0	0.0	0.0
61/ 30/ 28 (C)	0.21992	0.00187	-0.04707	0.0	0.0	0.0
61/ 30/ 29 (C)	0.82921	-0.03251	-0.09754	0.0	0.0	0.0
61/ 30/ 30 (C)	1.27780	-0.07856	-0.23568	0.0	0.0	0.0
61/ 30/ 31 (C)	2.01081	-0.12589	-0.37766	0.0	0.0	0.0
61/ 30/ 32 (C)	2.05517	-0.12589	-0.37766	0.0	0.0	0.0
61/ 30/ 33 (C)	-0.50549	0.04983	0.14949	0.0	0.0	0.0
61/ 30/ 34 (C)	-0.41678	0.04983	0.14949	0.0	0.0	0.0
61/ 30/ 35 (C)	0.81127	-0.02556	-0.15197	0.0	0.0	0.0
61/ 30/ 36 (C)	0.76366	-0.02556	-0.15197	0.0	0.0	0.0
61/ 30/ 37 (C)	-1.37881	0.10749	0.32246	0.0	0.0	0.0
61/ 30/ 38 (C)	-1.29009	0.10749	0.32246	0.0	0.0	0.0
61/ 30/ 39 (C)	0.38105	0.00168	-0.07023	0.0	0.0	0.0
61/ 30/ 40 (C)	0.33344	0.00168	-0.07023	0.0	0.0	0.0
62/ 30/ 1	0.22789	0.00802	0.02405	0.0	0.0	0.0
62/ 30/ 2	-73.84803	-5.06909	-15.20726	0.0	0.0	0.0
62/ 30/ 3	-73.84803	-5.06909	-15.20726	0.0	0.0	0.0
62/ 30/ 4	-73.84803	-5.06909	-15.20726	0.0	0.0	0.0
62/ 30/ 5	4.11796	0.0	0.0	0.0	0.0	0.0
62/ 30/ 6	3.76432	0.0	0.0	0.0	0.0	0.0
62/ 30/ 7	-31.81891	-15.20726	5.06909	0.0	0.0	0.0
62/ 30/ 8	-16.02985	0.0	0.0	0.0	0.0	0.0
62/ 30/ 9 (C)	0.44943	0.02322	0.06967	0.0	0.0	0.0
62/ 30/ 10 (C)	1.47696	0.10138	0.30415	0.0	0.0	0.0
62/ 30/ 11 (C)	-1.04799	-0.08024	-0.24073	0.0	0.0	0.0
62/ 30/ 12 (C)	-1.05838	-0.08024	-0.24073	0.0	0.0	0.0
62/ 30/ 13 (C)	-0.03366	0.0	0.0	0.0	0.0	0.0

Bar/Node/Case	FX (kip)	FY (kip)	FZ (kip)	MX (kip-in)	MY (kip-in)	MZ (kip-in)
62/ 30/ 14 (C)	-0.06682	-0.03194	0.01065	0.0	0.0	0.0
62/ 30/ 15 (C)	0.44943	0.02322	0.06967	0.0	0.0	0.0
62/ 30/ 16 (C)	1.92640	0.12461	0.37382	0.0	0.0	0.0
62/ 30/ 17 (C)	-0.59655	-0.05702	-0.17106	0.0	0.0	0.0
62/ 30/ 18 (C)	-0.60895	-0.05702	-0.17106	0.0	0.0	0.0
62/ 30/ 19 (C)	0.41577	0.02322	0.06967	0.0	0.0	0.0
62/ 30/ 20 (C)	0.38261	-0.00871	0.08032	0.0	0.0	0.0
62/ 30/ 21 (C)	0.77116	0.03908	0.11723	0.0	0.0	0.0
62/ 30/ 22 (C)	0.76337	0.03908	0.11723	0.0	0.0	0.0
62/ 30/ 23 (C)	1.53948	0.09926	0.29778	0.0	0.0	0.0
62/ 30/ 24 (C)	1.52207	0.08250	0.30337	0.0	0.0	0.0
62/ 30/ 25 (C)	-0.77833	-0.06631	-0.19893	0.0	0.0	0.0
62/ 30/ 26 (C)	-0.78872	0.06631	-0.19893	0.0	0.0	0.0
62/ 30/ 27 (C)	0.24510	0.01393	0.04180	0.0	0.0	0.0
62/ 30/ 28 (C)	0.22289	-0.00842	0.04926	0.0	0.0	0.0
62/ 30/ 29 (C)	0.62921	0.03251	0.09754	0.0	0.0	0.0
62/ 30/ 30 (C)	1.27780	0.07856	0.23568	0.0	0.0	0.0
62/ 30/ 31 (C)	2.06407	0.12589	0.37766	0.0	0.0	0.0
62/ 30/ 32 (C)	2.05575	0.12589	0.37766	0.0	0.0	0.0
62/ 30/ 33 (C)	-0.39898	-0.04983	-0.14949	0.0	0.0	0.0
62/ 30/ 34 (C)	-0.41561	-0.04983	-0.14949	0.0	0.0	0.0
62/ 30/ 35 (C)	0.80105	0.04815	0.14444	0.0	0.0	0.0
62/ 30/ 36 (C)	0.76789	0.01621	0.15508	0.0	0.0	0.0
62/ 30/ 37 (C)	-1.27229	-0.10749	-0.32246	0.0	0.0	0.0
62/ 30/ 38 (C)	-1.28892	-0.10749	-0.32246	0.0	0.0	0.0
62/ 30/ 39 (C)	0.37083	0.02090	0.06271	0.0	0.0	0.0
62/ 30/ 40 (C)	0.33767	-0.01103	0.07335	0.0	0.0	0.0
62/ 31/ 1	0.22789	-0.00802	-0.02405	0.0	0.0	0.0
62/ 31/ 2	-73.84803	5.06909	15.20726	0.0	0.0	0.0
62/ 31/ 3	-73.84803	5.06909	15.20726	0.0	0.0	0.0
62/ 31/ 4	-73.84803	5.06909	15.20726	0.0	0.0	0.0
62/ 31/ 5	4.11796	0.0	0.0	0.0	0.0	0.0
62/ 31/ 6	3.76432	0.0	0.0	0.0	0.0	0.0
62/ 31/ 7	-31.81891	15.20726	-5.06909	0.0	0.0	0.0
62/ 31/ 8	16.02985	0.0	0.0	0.0	0.0	0.0
62/ 31/ 9 (C)	0.44943	-0.02322	-0.06967	0.0	0.0	0.0

Bar/Node/Case	FX (kip)	FY (kip)	FZ (kip)	MX (kip-in)	MY (kip-in)	MZ (kip-in)
62/ 31/ 10 (C)	1.47696	-0.10138	-0.30415	0.0	0.0	0.0
62/ 31/ 11 (C)	-1.04799	0.08024	0.24073	0.0	0.0	0.0
62/ 31/ 12 (C)	-1.05838	0.08024	0.24073	0.0	0.0	0.0
62/ 31/ 13 (C)	0.03366	0.0	0.0	0.0	0.0	0.0
62/ 31/ 14 (C)	-0.06682	0.03194	-0.01065	0.0	0.0	0.0
62/ 31/ 15 (C)	0.44943	-0.02322	-0.06967	0.0	0.0	0.0
62/ 31/ 16 (C)	1.92640	-0.12461	-0.37382	0.0	0.0	0.0
62/ 31/ 17 (C)	-0.59655	0.05702	0.17106	0.0	0.0	0.0
62/ 31/ 18 (C)	-0.60895	0.05702	0.17106	0.0	0.0	0.0
62/ 31/ 19 (C)	0.48310	-0.02322	-0.06967	0.0	0.0	0.0
62/ 31/ 20 (C)	0.38261	0.00871	-0.08032	0.0	0.0	0.0
62/ 31/ 21 (C)	0.77116	-0.03908	-0.11723	0.0	0.0	0.0
62/ 31/ 22 (C)	0.76337	-0.03908	-0.11723	0.0	0.0	0.0
62/ 31/ 23 (C)	1.57483	-0.09926	-0.29778	0.0	0.0	0.0
62/ 31/ 24 (C)	1.52207	-0.08250	-0.30337	0.0	0.0	0.0
62/ 31/ 25 (C)	-0.77833	0.06631	0.19893	0.0	0.0	0.0
62/ 31/ 26 (C)	-0.78872	0.06631	0.19893	0.0	0.0	0.0
62/ 31/ 27 (C)	0.29522	-0.01393	-0.04180	0.0	0.0	0.0
62/ 31/ 28 (C)	0.22289	0.00842	-0.04926	0.0	0.0	0.0
62/ 31/ 29 (C)	0.62921	-0.03251	-0.09754	0.0	0.0	0.0
62/ 31/ 30 (C)	1.27780	-0.07856	-0.23568	0.0	0.0	0.0
62/ 31/ 31 (C)	2.06407	-0.12589	-0.37766	0.0	0.0	0.0
62/ 31/ 32 (C)	2.05575	-0.12589	-0.37766	0.0	0.0	0.0
62/ 31/ 33 (C)	-0.39898	0.04983	0.14949	0.0	0.0	0.0
62/ 31/ 34 (C)	-0.41561	0.04983	0.14949	0.0	0.0	0.0
62/ 31/ 35 (C)	0.86838	-0.04815	-0.14444	0.0	0.0	0.0
62/ 31/ 36 (C)	0.76789	-0.01621	-0.15508	0.0	0.0	0.0
62/ 31/ 37 (C)	-1.27229	0.10749	0.32246	0.0	0.0	0.0
62/ 31/ 39 (C)	-1.28892	0.10749	0.32246	0.0	0.0	0.0
62/ 31/ 39 (C)	0.43815	-0.32000	-0.06271	0.0	0.0	0.0
62/ 31/ 40 (C)	0.33767	0.01103	-0.07335	0.0	0.0	0.0
63/ 31/ 1	0.22789	0.00802	0.02405	0.0	0.0	0.0
63/ 31/ 2	-73.84803	-5.06909	-15.20726	0.0	0.0	0.0
63/ 31/ 3	-73.84803	-5.06909	-15.20726	0.0	0.0	0.0
63/ 31/ 4	-73.84803	-5.06909	-15.20726	0.0	0.0	0.0
63/ 31/ 5	3.73799	0.0	0.0	0.0	0.0	0.0

Bar/Node/Case	FX (kip)	FY (kip)	FZ (kip)	MX (kip-in)	MY (kip-in)	MZ (kip-in)
63/ 31/ 6	3.73948	0.0	0.0	0.0	0.0	0.0
63/ 31/ 7	-33.83419	-10.75315	3.58438	0.0	0.0	0.0
63/ 31/ 8	11.16455	10.75315	-3.58438	0.0	0.0	0.0
63/ 31/ 9 (C)	0.44943	0.02322	0.06967	0.0	0.0	0.0
63/ 31/ 10 (C)	1.47696	0.10138	0.30415	0.0	0.0	0.0
63/ 31/ 11 (C)	-1.05915	-0.08024	-0.24073	0.0	0.0	0.0
63/ 31/ 12 (C)	-1.05911	-0.08024	-0.24073	0.0	0.0	0.0
63/ 31/ 13 (C)	0.02345	0.02258	-0.00753	0.0	0.0	0.0
63/ 31/ 14 (C)	-0.07105	-0.02258	0.00753	0.0	0.0	0.0
63/ 31/ 15 (C)	0.44943	0.02322	0.06967	0.0	0.0	0.0
63/ 31/ 16 (C)	1.92640	0.12461	0.37382	0.0	0.0	0.0
63/ 31/ 17 (C)	-0.60972	-0.05702	-0.17106	0.0	0.0	0.0
63/ 31/ 18 (C)	-0.60968	-0.05702	-0.17106	0.0	0.0	0.0
63/ 31/ 19 (C)	0.47288	0.04581	0.06215	0.0	0.0	0.0
63/ 31/ 20 (C)	0.37838	0.00064	0.07720	0.0	0.0	0.0
63/ 31/ 21 (C)	0.76279	0.03908	0.11723	0.0	0.0	0.0
63/ 31/ 22 (C)	0.76282	0.03908	0.11723	0.0	0.0	0.0
63/ 31/ 23 (C)	1.59946	0.11112	0.29383	0.0	0.0	0.0
63/ 31/ 24 (C)	1.51985	0.08741	0.30173	0.0	0.0	0.0
63/ 31/ 25 (C)	-0.78949	-0.06631	-0.19893	0.0	0.0	0.0
63/ 31/ 26 (C)	-0.78945	-0.06631	-0.19893	0.0	0.0	0.0
63/ 31/ 27 (C)	0.28607	0.02974	0.03654	0.0	0.0	0.0
63/ 31/ 28 (C)	0.21992	-0.00187	0.04707	0.0	0.0	0.0
63/ 31/ 29 (C)	0.62921	0.03251	0.09754	0.0	0.0	0.0
63/ 31/ 30 (C)	1.27780	0.07856	0.23568	0.0	0.0	0.0
63/ 31/ 31 (C)	2.05513	0.12589	0.37766	0.0	0.0	0.0
63/ 31/ 32 (C)	2.05517	0.12589	0.37766	0.0	0.0	0.0
63/ 31/ 33 (C)	-0.41685	-0.04983	-0.14949	0.0	0.0	0.0
63/ 31/ 34 (C)	-0.41678	-0.04983	-0.14949	0.0	0.0	0.0
63/ 31/ 35 (C)	0.85816	0.07073	0.13691	0.0	0.0	0.0
63/ 31/ 36 (C)	0.76366	0.02556	0.15197	0.0	0.0	0.0
63/ 31/ 37 (C)	-1.29018	-0.10749	-0.32246	0.0	0.0	0.0
63/ 31/ 38 (C)	-1.29009	-0.10749	-0.32246	0.0	0.0	0.0
63/ 31/ 39 (C)	0.42794	0.04348	0.05518	0.0	0.0	0.0
63/ 31/ 40 (C)	0.33344	-0.00168	0.07023	0.0	0.0	0.0
63/ 32/ 1	0.22789	-0.00802	-0.02405	0.0	0.0	0.0

Bar/Node/Case	FX (kip)	FY (kip)	FZ (kip)	MX (kip-in)	MY (kip-in)	MZ (kip-in)
63/ 32/ 2	-73.84803	5.06909	15.20726	0.0	0.0	0.0
63/ 32/ 3	-73.84803	5.06909	15.20726	0.0	0.0	0.0
63/ 32/ 4	-73.84803	5.06909	15.20726	0.0	0.0	0.0
63/ 32/ 5	3.73799	0.0	0.0	0.0	0.0	0.0
63/ 32/ 6	3.73948	0.0	0.0	0.0	0.0	0.0
63/ 32/ 7	11.16455	10.75315	-3.58438	0.0	0.0	0.0
63/ 32/ 8	33.83419	-10.75315	3.58438	0.0	0.0	0.0
63/ 32/ 9 (C)	0.44943	-0.02322	-0.06967	0.0	0.0	0.0
63/ 32/ 10 (C)	1.47696	-0.10138	-0.30415	0.0	0.0	0.0
63/ 32/ 11 (C)	-1.05915	0.08024	0.24073	0.0	0.0	0.0
63/ 32/ 12 (C)	-1.05911	0.08024	0.24073	0.0	0.0	0.0
63/ 32/ 13 (C)	0.07105	-0.02258	0.00753	0.0	0.0	0.0
63/ 32/ 14 (C)	-0.02345	0.02258	-0.00753	0.0	0.0	0.0
63/ 32/ 15 (C)	0.44943	-0.02322	-0.06967	0.0	0.0	0.0
63/ 32/ 16 (C)	1.92640	-0.12461	-0.37382	0.0	0.0	0.0
63/ 32/ 17 (C)	-0.60972	0.05702	0.17106	0.0	0.0	0.0
63/ 32/ 18 (C)	-0.60968	0.05702	0.17106	0.0	0.0	0.0
63/ 32/ 19 (C)	0.52049	-0.04581	-0.06215	0.0	0.0	0.0
63/ 32/ 20 (C)	0.42599	-0.00064	-0.07720	0.0	0.0	0.0
63/ 32/ 21 (C)	0.76279	-0.03908	-0.11723	0.0	0.0	0.0
63/ 32/ 22 (C)	0.76282	-0.03908	-0.11723	0.0	0.0	0.0
63/ 32/ 23 (C)	1.59946	-0.11112	-0.29383	0.0	0.0	0.0
63/ 32/ 24 (C)	1.54485	-0.08741	-0.30173	0.0	0.0	0.0
63/ 32/ 25 (C)	-0.78949	0.06631	0.19893	0.0	0.0	0.0
63/ 32/ 26 (C)	-0.78945	0.06631	0.19893	0.0	0.0	0.0
63/ 32/ 27 (C)	0.31940	-0.02974	-0.03654	0.0	0.0	0.0
63/ 32/ 28 (C)	0.25325	0.00187	-0.04707	0.0	0.0	0.0
63/ 32/ 29 (C)	0.62921	-0.03251	-0.09754	0.0	0.0	0.0
63/ 32/ 30 (C)	1.27780	-0.07856	-0.23568	0.0	0.0	0.0
63/ 32/ 31 (C)	2.05513	-0.12589	-0.37766	0.0	0.0	0.0
63/ 32/ 32 (C)	2.05517	-0.12589	-0.37766	0.0	0.0	0.0
63/ 32/ 33 (C)	-0.41685	0.04983	0.14949	0.0	0.0	0.0
63/ 32/ 34 (C)	-0.41678	0.04983	0.14949	0.0	0.0	0.0
63/ 32/ 35 (C)	0.90577	-0.07073	-0.13691	0.0	0.0	0.0
63/ 32/ 36 (C)	0.81127	-0.02556	-0.15197	0.0	0.0	0.0
63/ 32/ 37 (C)	-1.29018	0.10749	0.32246	0.0	0.0	0.0