CONSTRUCTION PERMIT APPLICATION

NEW JERSEY UNIFORM CONSTRUCTION CODE

I. IDENTIFICATION

1. Proposed Work at: Brick Township High School - Chambersburg Rd.
2. Owner Name: Brick Township Bd of Ed Tel. ( )
   Address 101 Hendrickson Avenue, Brick Town, N.J. 08723
3. Principal Contractor: Institutional Sys Serv Corp Tel. (201) 670-0005
   Address 60 W. Prospect St, Waldwick NJ 07436
   Lic. No. or Builder Reg. No. ____ Federal Emp. No. 22-2303384
4. Architect or Engineer: ____ Tel. ( )
   Address ____
5. Responsible Person in Charge of Work Keith Schuck Tel. (201) 670-0005

II. PROPOSED WORK

A. TYPE OF WORK

1. ☐ Minor Work (Single Trade)
2. ☐ Small Job ($5,000 and no Prior Approvals)
   Complete only II.B., III and IV.A. and Page 2
3. ☐ New Building
4. ☐ Addition
5. ☐ Alteration
6. ☐ Repair, Replacement
7. ☐ Demolition
8. ☐ Other: ____

B. CATEGORIES OF WORK

Permit/Category	Estimated
1. ☐ Building/ Structural	$
2. ☐ Plumbing	
3. ☒ Electrical	
4. ☒ Fire Protection	
5. ☐ Other ____	
6. ☐ Other ____	
TOTAL COST	$50,000

C. DO YOU WANT:

1. ☐ Partial Releases 2. ☐ Prototype Processing

D. DOES OR WILL YOUR BUILDING CONTAIN ANY OF THE FOLLOWING?

1. ☐ Elevators/Dumbwaiters
2. ☐ High-Pressure Boilers
3. ☐ Refrigeration Systems
4. ☐ Pressure Vessels
5. ☐ Hazardous Uses/Places of Assembly
6. ☐ Cross-connections/ Backflow Preventors
7. ☐ Sprinklers
8. ☐ Smoke Control Systems in Open Wells

III. DESCRIPTION OF BUILDING USE (USE GROUPS)

A. RESIDENTIAL

1. ☐ Hotels (R–1)
2. ☐ Multi-Family (R–2)
   HMD Reg. No.: ____
3. ☐ Two Family (R–3b)
4. ☐ One-Family (R–3a)

If new construction, enter no. of dwelling units ____

If other than new construction, enter no. of dwelling units:
Before Construction: ____
After Construction: ____
Net Gain (or loss): ____

B. NON-RESIDENTIAL

5. ☐ Theatres with Stage (A–1–A)
6. ☐ Movie Theatres (A–1–B)
7. ☐ Night Clubs (A–2)
8. ☐ Restaurants, Libraries, Museums (A–3)
9. ☐ Religious Assembly (A–4)
10. ☐ Outdoor Assembly (A–5)
11. ☐ Business (B)
12. ☒ Educational (E)
13. ☐ Moderate-Hazard Factory (F–1)
14. ☐ Low-Hazard Factory (F–2)
15. ☐ High-Hazard (H)
16. ☐ Institutional Detention Center (I–1)
17. ☐ Hospitals, Infirmaries (I–2)
18. ☐ Group Homes (I–3)
19. ☐ Mercantile (M)
20. ☐ Moderate-Hazard Warehouse (S–1)
21. ☐ Low-Hazard Warehouse (S–2)
22. ☐ Temporary, Misc. (U)
23. ☐ Other ____

State Specific Use: ____

If Change in Use Group, Indicate Former: ____

IV. BUILDING CHARACTERISTICS

A. OWNERSHIP

1. ☐ Private (Individual, Corp., Non-profit Inst., Etc.)
2. ☒ Public (State, County or Local Govt.)

B. HEATING FUEL

	Principal	Secondary	Type
3.	☐	☐	Gas
4.	☐	☐	Oil
5	☐	☐	Electric
6.	☐	☐	Solid (Wood, Coal, Etc.)
7.	☐	☐	Propane
8.	☐	☐	Solar
9.	☐	☐	Other ____

C. TYPE OF SEWAGE DISPOSAL

10. ☐ Public or Private Company
11. ☐ Private (Septic Tank, Etc.)

D. TYPE OF WATER SUPPLY

12. ☐ Public or Private Company
13. ☐ Private (Well, Etc.)

E. BUILDING CHARACTERISTICS

14. No. of Stories ____
15. Height of Structure ____ Ft.
16. Area—Largest Floor ____ Sq. Ft.
17. Bldg. Area—All Fls. ____ Sq. Ft.
18. Volume of Structure ____ Cu. Ft.
19. Total Land Area Disturbed ____ Sq. Ft.

LDS BR 10110199

CERTIFICATION IN LIEU OF OATH

I. OWNER SECTION

I hereby certify that I am the owner of the property listed on Page 1. This dwelling is to be occupied by myself and is not to be used for any purpose, other than single family residential use.

A. ☐ I further certify that I prepared the plans submitted. This statement is made in accordance with the New Jersey Uniform Construction Code, N.J.A.C. 5:23-2.15(e)vii.

B. ☐ I further certify that I will perform the work below.

B1. ☐ Building B2. ☐ Electrical B3. ☐ Plumbing

C. ☐ I further certify that a new home will be constructed on this property, for my use and occupancy. I attest that all design, construction, plumbing, or electrical work will be done by me or by subcontractors under my supervision, in accordance with all applicable laws; and further acknowledge that said new home is not covered under the New Home Warranty and Builders Registration Act (N.J.A.C. 46:3B-1 et. seq.) and that such fact shall be disclosed to any person purchasing this property within ten years of the date of issuance of a certificate of occupancy.

D. ☐ I agree to advise all contractors on this project that they are required to be registered with the New Jersey Division of Taxation and to comply with all New Jersey tax laws.

I understand that if any of the above statements are willfully false, I am subject to punishment.

SIGNATURE _____ DATE _____

II. AGENT SECTION

I hereby certify that the work is authorized by the owner of record and I have been authorized by the owner to make this application as his agent.

I agree to advise all contractors on this project that they are required to be registered with the New Jersey Division of Taxation and to comply with all New Jersey tax laws.

I understand that if any of the above statements are willfully false, I am subject to punishment.

☒ **Check if contractor.**

AGENT NAME Institutional Sept. Sys Corp TEL. (201) 670-0005

ADDRESS 60 W. Prospect St.

Waldwick New Jersey 07463

SIGNATURE [illegible]

BLOCK NO. 701 LOT NO. 12 SUBDIVISION _____ PERMIT NO. 12940

PRIOR APPROVALS CHECKLIST

APPROVALS	LOCAL				COUNTY				REGIONAL				STATE				COMMENTS
	Prelim. Approval		Final Approval		Prelim. Approval		Final Approval		Prelim. Approval		Final Approval		Prelim. Approval		Final Approval		
	Init.	Date	Init.	Date	Init.	Date	Init.	Date	Init.	Date	Init.	Date	Init.	Date	Init.	Date	
☐ Planning Board																	
☐ Zoning Board																	
☐ Sewer Authority																	
☐ Water Authority																	
☐ Fire Department																	
☐ Police Department																	
☐ Health Department																	
☐ Soil Conservation																	
☐ N.J. Dept. of Community Affairs																	
☐ N.J. Dept. of Transportation																	
☐ N.J. Dept. of Environmental Protection																	
☐ Other: _____																	
☐ _____																	
☐ _____																	
☐ _____																	
☐ _____																	
☐ _____																	
☐ _____																	

SUBCODES AND SPECIAL REGULATIONS APPLICABLE:

	EDITION OF CODE		EDITION OF CODE		
☐ One and Two Family Dwellings	_____	☐ Mechanical	_____	☐ Flood Hazard	_____
☐ Building	_____	☐ Energy	_____	☐ As Built Elevation Certification	_____
☐ Electrical	_____	☐ Barrier Free	_____	☐ Other	_____
☐ Plumbing	_____	☐ Other	_____		_____

PERMIT CONTROL

I. PLAN REVIEW STATUS

Updated at time of receipt of drawings and when plans are approved.

☐ PARTIAL RELEASES
☐ PROTOTYPE PLAN – FILE LOCATION AND NO. _____

Plan Review Required	Type of Work	Plans Received By Date	Plans Received By Receiver	Approval Date	Reviewer	Comments
☐	BUILDING					
	Footings/Foundations					
	Framing					
	Architectural					
	Other _____					
☐	PLUMBING					
☐	ELECTRICAL					
☑	FIRE PROTECTION			10/15/87	[illegible]	
☐	OTHER _____					

II. PERMIT/INSPECTION STATUS

Updated at time of permit and after final approvals.

Issue Date	Category	Revisions			Final Inspection	Comments
	ALL CONSTRUCTION					
	BUILDING					
	Footings/Foundations					
	Framing					
	Architectural					
	Other _____					
	PLUMBING					
	ELECTRICAL					
✓	FIRE PROTECTION			2/4/88	JE	rep 12-28-87 JE must [illegible]
	OTHER _____					

III. CERTIFICATES ISSUED

CERTIFICATES TO BE ISSUED:	Date Issued
☐ Temporary Certificate of Occupancy Date Expired _____	_____
☐ Temporary Certificate of Occupancy Date Expired _____	_____
☐ Certificate of Occupancy No. _____	_____
☐ Certificate of Continued Occupancy No. _____	_____
☐ Certificate of Approval No. _____	_____
☐ None	

IV. ON-GOING INSPECTIONS

On-going Inspections Required (See Page 1, II.D.)	Date Posted to Log and Tickler

V. FEE SUMMARY

Initial fee collection recorded in A; all others in section B.

A. COLLECTED AT TIME OF CONSTRUCTION PERMIT ISSUANCE

	AMOUNT
BUILDING	$.
PLUMBING	.
ELECTRICAL	.
FIRE PROTECTION	.
OTHER _____	.
SUBTOTAL	$.
– LESS: 20% of subtotal (when plan review performed by state agency).	(.)
D.C.A. TRAINING FEE .0006 x _____	= .
CERTIFICATE OF OCCUPANCY	.
OTHER _____	.
OTHER _____	.
TOTAL COLLECTED WHEN PERMIT ISSUED	$.

EXEMPT

DATE 11/2/87 Collected By Palo

B. COLLECTED AFTER CONSTRUCTION PERMIT ISSUANCE

	Date	Collected By	AMOUNT
CERTIFICATE OF OCCUPANCY			.
OTHER			.
OTHER			.
– LESS: Refunds			(.)
TOTAL COLLECTED AFTER PERMIT ISSUED			$.

C. TOTAL CONSTRUCTION FEES COLLECTED

	AMOUNT
COLLECTED WITH PERMIT (VA)	$.
COLLECTED AFTER PERMIT (VB)	.
TOTAL	$.

FIRE SUBCODE
TECHNICAL SECTION

PERMIT NO. 12940
DATE ISSUED 1-2-87
REVISION DATE
Block 701 Lot 12
Subdivision

A. IDENTIFICATION

APPLICANT – *Complete unshaded areas only*

When changing contractors, notify this office

Owner: Brick Township Board of Education
Address: 101 Hendrickson Ave. Brick Town, NJ 08723
Tel. (201) 477-2800
Work Site Address: Brick Township HS 346 Chambers Bridg Rd. Brick Town, New Jersey

Contractor: Institutional Systems Serv. Corp.
Address: 60 W. Prospect St. Waldwick, N. J., 07463
Tel. (201) 670-0005
Lic. No.
Federal Emp. No. 22-2303384

CERTIFICATION IN LIEU OF OATH:

(Complete for Minor Work and Small Job Only)

I hereby certify that the proposed work is authorized by the owner of record and I have been authorized by the owner to make this application as his agent.

AGENT SIGNATURE

B. TECHNICAL SITE DATA

B1. SPRINKLERS

TYPE: ☐ Wet ☐ Dry ☐ Other _____ FEE
Area Sprinkled: ☐ Full ☐ Partial (specify in comments)
No. of Heads: _____ No. of Spare Heads: _____
☐ Valves Supervised – Method: _____
Water Supply – Source: _____ Size: _____
FD Connection Location: _____
Estimated Cost of Work: $ _____ $ _____

B2. SPECIAL SUPPRESSION SYSTEMS

TYPE: ☐ Dry Chemical ☐ CO_2 ☐ Halon ☐ Foam ☐ Other _____
Manual Pull: ☐ Yes ☐ No
Locations: _____
Estimated Cost of Work: $ _____ $ _____

B3. ALARM

TYPE: ☒ Manual ☒ Automatic FEE
Supervision Type: ☒ Local ☐ Central ☐ Proprietary ☐ Remote Location
Estimated Cost of Work: $ 50,000.00 $ _____

B4. STAND PIPES

Pipe Size: _____ Pump Size: _____
Water Source: _____ Size: _____
FD Connection Location: _____
Hose Station: ☐ Yes ☐ No
Estimated Cost of Work: $ _____ $ _____

B5. OTHER

$ _____
$ _____
$ _____

Subtotal $ _____
Minimum Fire Protection Fee (If Applicable) $ _____
Total Fire Protection Fee (*Greater of Minimum or Subtotal*) $ _____

C. FIRE PROTECTION CHARACTERISTICS

USE GROUP _____ Present _____ Proposed
Heating Systems – Location: _____
Type: ☐ Gas ☐ Oil ☐ Electrical ☐ Solar ☐ Other _____
Fuel Storage Tank – Location: _____ Fuel Type: _____ Capacity: _____
Total Estimated Cost of Fire Protection Work: $ _____

D. COMMENTS

Exempt

☐ Partial Releases ☐ Prototype Processing

U.C.C. Form F-140 (8/83) Green = Office Copy White = Applicant Copy Pink = Inspection Copy

PLAN REVIEW AND INSPECTION — FIRE

DATE	JOB CONDITION/COMMENTS
12-28-87	test Alarm Sys. But Don't issue Final till old disconnected pull Box are Removed & old panal Removed.

JOB SUMMARY

☐ No Plans Required
☑ Plan Review Approved

Date: 10-1-87

Approved By: [illegible]

INSPECTIONS FINAL

☒ CO ☐ CCO ☐ CA

Date: 2-4-88

Inspected By: JL

INSPECTIONS

Type		Failure Date			Approval Date
☐ Fire Suppression Test					
☒ Fire Alarm Test	12-28-87				2-4-88
☐ Smoke Test					
☐ TCO					
☑ Other Pull Sta	12-28-87				2-4-88
☒ Other Bell					2-4-88
☐ Other					
☐ Other					

U.C.C. Form F-140 (8/83)

BRICK TOWNSHIP
BUREAU OF FIRE SAFETY

500 Herbertsville Road
Brick Township, New Jersey 08724
(201) 458-4100

December 30, 1987

Robert K. Stutts
Business Administrator
Brick Township Board of Education
101 Hendrickson Ave.
Brick, NJ 08723

Dear Mr. Stutts:

This letter is in reference to the fire alarm system inspection at the Brick Township High School on Dec. 28, 1987. Two technicians from Institutional Systems Service Corp. conducted the test which was witnessed by the Fire Sub-Code Official and the undersgined. The following conditions were noted:

1. Numerous smoke detectors and manual pull fire alarms were tested for alarm conditions and indication at both the main and remote annunciator panels. All systems operated properly at that time with the exception of the central station notification.
2. It was noted that the remaining old system manual pull stations, fire bells and alarm panel were still in place. This old system must be removed so as to avoid confusion and false indication of the fire alarms in an actual emergency.
3. The central station notification has not been installed and tested. This must be installed as soon as possible for final approval of the system.

Please make arrangements to have the above conditions corrected as soon as possible. Thank you for your anticipated cooperation.

Very truly yours,

Kevin C. Batzel,
Fire Official

KCB/db

cc: John Everisto, Fire Sub-Code

Institutional Systems Service Corp.

60 West Prospect Street
Waldwick, New Jersey 07463

Service Report

SERVICE ORDER NO. 24332

DATE 12/28/87

TECHNICIAN KRJ-DG

PHONE NO. (201) 670-0005

TYPE WORK
- ☐ SYSTEM TEST
- ☐ WARRANTY
- ☑ INSTALLATION
- ☐ BILLED SERVICE
- ☐ CALL BACK

SERVICE CONTRACT
- ☐ SCHEDULED
- ☐ EMERGENCY

SYSTEM
- ☐ CLOCK
- ☑ FIRE
- ☐ AUDIO
- ☐ HOSPITAL
- ☐ EMER. LITE
- ☐ OTHER

JOB SITE

NAME: Brick Twp H.S.
ADDRESS: Chamberlinburg Rd
CITY: Brick
STATE: NJ
ZIP:
PERSON TO CONTACT:

BILL TO

NAME: Bd of Ed
ADDRESS:
CITY:
STATE:
ZIP:
CUSTOMER ACCT. NO.:
CUST. P.O. NO.:

OUT-OF-POCKET EXPENSE

TRAVEL	
VEHICLE	
LOCAL PURCH.	
TOTAL	

SERVICE CONTRACT NO.:

TIME IN: | TIME OUT: | ☑ JOB COMPLETED | ☐ JOB INCOMPLETE

CUSTOMER COMPLAINT: Inspection of fire alarm system

SERVICE PERFORMED: Inspected FA system and explained operation. Ok

MATERIAL REQUIREMENTS

QTY	PART NO.	DESCRIPTION	EXT PRICE

MATERIAL TOTAL

STR. TIME	HRS @	/HR	
OVERTIME	HRS @	/HR	
TRAVEL TIME	HRS @	/HR	
MILEAGE	MILES @	/MILE	
EXPENSES			
FREIGHT			
TAX			
TOTAL JOB AMOUNT			

CUSTOMER APPROVAL AND TITLE: Joseph Cvarich

THE ABOVE SERVICE HAS BEEN PERFORMED TO MY COMPLETE SATISFACTION

INSTITUTIONAL SYSTEMS SERVICE CORP.

PRODUCT INFORMATION

FOR

BRICK TOWNSHIP H. S.

Sent to: Mr. Anthony Avello
Fire Sub-Code Official
Ocean County Construction
Inspection Department
CN 2191
32 Hadley Avenue
Toms River, N. J., 08754

Prepared by: Mr. Frederick A. Robinson
Institutional Systems Service Corp.
60 W. Prospect St.
Waldwick, N. J., 07463
Telephone: 201-670-0005

October 9, 1987

Copy: Mr. Robert Stutts
Brick Town Board of Education

5721B SERIES LOW VOLTAGE MULTIPLE-ZONE SYSTEM

Control Panel

5721B Series

Provides up to twenty circuits in a single cabinet.

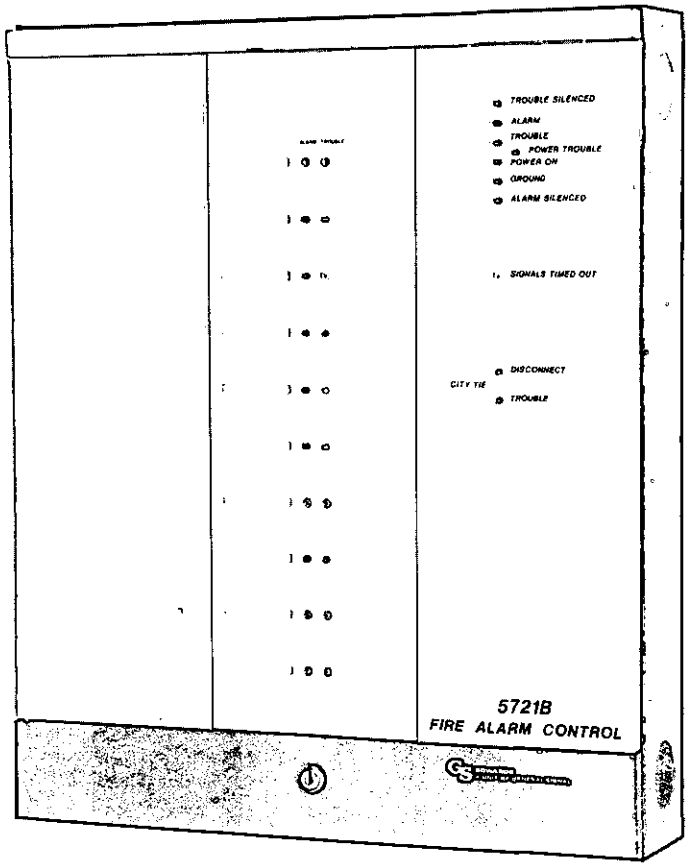

Features

- UL LISTED
- MODULAR, SOLID STATE
- POWER LIMITED ALARM INITIATING CIRCUITS
- SEPARATE ALARM AND TROUBLE INDICATORS PER ZONE
- AUTOMATIC GROUND DETECTION
- COLORED LED's
- LAMP TEST
- MODULE AND CABLE REMOVAL SUPERVISION

Optional Features

- 2 WIRE IONIZATION AND PHOTO-ELECTRONIC SMOKE DETECTOR CIRCUITS
- 24 VDC OR 120 VAC PARALLEL WIRED ALARM INDICATING SIGNALS
- CLASS A ALARM INITIATING AND INDICATING CIRCUITS
- FIELD PROGRAMMABLE ZONED EVACUATION AND FAN SHUTDOWN
- INTEGRAL BATTERY AND CHARGER
- ZONE DISCONNECT SWITCH
- REMOTE BATTERY AND CHARGER
- REMOTE STATION OR MUNICIPAL TIE WITH DISCONNECT
- REMOTE TROUBLE INDICATION
- FIELD PROGRAMMABLE ELECTRONIC CODE TRANSMITTERS
- DOUBLE SUPERVISION
- AUTOMATIC OR MANUAL ALARM SILENCING WITH SUBSEQUENT REALARM
- BATTERY LEAD SUPERVISION/ LOW BATTERY MONITORING

Description

The versatile 5721B is designed for use in schools, hospitals, nursing homes and in any other building requiring a supervised, zoned fire alarm system. This compact, modular designed control unit with selected plug-in modules and options is enclosed in a textured finished cabinet, attractively styled to blend with any decor.

The 5721B series control panels have been expertly engineered to provide the capability of easily adding the most frequently desired optional features. Plug-in extender panels and modules permit fast, economical installation and service. The 5721B series utilizes solid state technology to insure uniformity and reliability of performance. The system features long lasting Light Emitting Diodes (LED's) and is assembled with precise workmanship using high quality, rugged components throughout.

U.L. Listed, the 5721B series meets requirements of Article 760, Part C of the National Electrical Code (NFPA 70) allowing power limited fire protective signaling circuits.

©COPYRIGHT 1984 EDWARDS

A UNIT OF GENERAL SIGNAL

EDWARDS®

5721B SERIES LOW VOLTAGE MULTIPLE-ZONE SYSTEM

Operation

There are three modes of operation of electrically supervised fire alarm systems: the supervisory mode, the alarm mode, and the trouble mode.

SUPERVISORY MODE
(Normal Operating Condition)

With all power turned on to the system, and no alarms are in progress, the system POWER-ON lamp is lit, the trouble signal is silent, and the COMMON TROUBLE lamp is off. All circuit status lamps on all individual optional modules are off.

ALARM MODE
(After operation of any initiating appliance or device)

All common alarm or programmed signals will sound. The local alarm buzzer will sound (pulse) at the FACP. The individual zone ALARM lamp and common ALARM lamp will flash. The individual zone and common alarm contacts will operate.

These may be used to shut down fans, air conditioning units, close fire doors, etc.

TROUBLE MODE

When a fault, such as an open develops in the initiating circuit, or open or short develops in the signaling circuit, the system trouble buzzer sounds steady and the ZONE and common TROUBLE lamps are illuminated at the panel. The zone lamp indicates the faulty circuit. Common trouble contacts are also operated. When a ground occurs in any alarm initiating or signaling circuit, the system operates as described above, except the zone lamp remains off and the GROUND lamp is illuminated.

When power failure occurs:

a) AC/AC System: When L1 power fails the POWER-ON lamp is extinguished and the trouble buzzer is sounded from L2. When L2 power fails the Standby Power Trouble lamp turns on, the trouble buzzer sounds, the common Trouble lamp lights and the common trouble contacts operate.

b) AC/DC System with Standby Battery: When main primary power source voltage level falls below 102 VAC, the system automatically transfers to standby battery power. The common Trouble Lamp is LIT, the system trouble buzzer sounds and the POWER-ON lamp is extinguished.

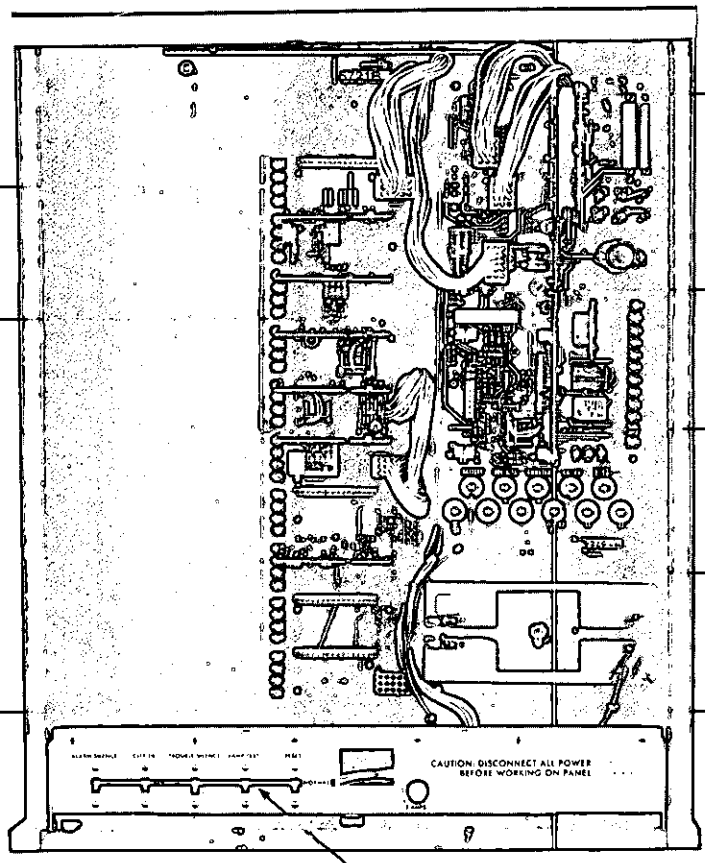

TERMINAL BLOCKS FOR FIELD WIRING

RECEIVING, SIGNALING OR AUXILIARY RELAY MODULES
CAT. NO. 5703B-101
5703B-122
5703B-103
5703B-105
5703B-107
5703B-201
5703B-203
5703B-301
5703B-402
5703B-405

CAT. NO. 5723B-11(x) SERIES STRIP PANEL (2 SHOWN, 4 MAX.)

STANDBY POWER MODULES
CAT. NO. 5721B-011
5721B-012
5721B-014
5721B-015

SIGNAL CONTROL MODULES
CAT. NO. 5721B-021
5721B-022
5721B-023
5721B-025
5721B-026
5721B-028

MUNICIPAL TIE MODULES (OPTIONAL)
CAT. NO. 5721B-031
5721B-032
5721B-033

SIGNAL SILENCE/RESET INHIBIT MODULE (OPTIONAL)
CAT. NO. 5721B-041

STANDBY BATTERY
24 VDC (OPTIONAL)
CAT. NO. 5724-1 (SHOWN)
5724-2
5724B-003
5724B-004

CAT. NO. 5721B MASTER PANEL CONTROLS

5721B SERIES LOW VOLTAGE MULTIPLE-ZONE SYSTEM

Common Control Panels

Cat No. 5721B
Fire Alarm Control Panel

Includes power supply, common control circuitry, space for up to four 5723B series five circuit strips, and up to two standby battery packs or signal circuit power extenders. Does not include dead front covers, mounts in Cat. No. 5730 box.

Cat. No. 5722B
Fire Alarm Extender Panel

When used with Cat. No. 5721B Fire Alarm Control Panel, allows the mounting of up to 6 additional 5723B series five circuit strips, with standby battery and/or signal circuit power extender. Does not include dead front covers, mounts in Cat. No. 5730 box.

Power, Signal Control and Remote Station Modules

The following modules plug into the Fire Alarm Control Panels.

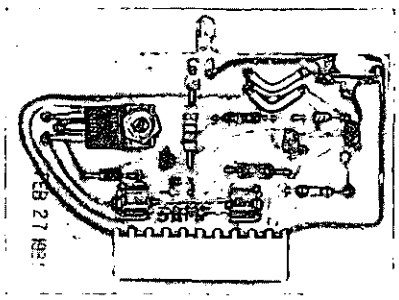

POWER MODULES

Space is provided for one Cat. No. 5721B-010 series module in the Cat. No. 5721B Fire Alarm Control Panel. (One Cat. No. 5721B-010 series module is required per system).

Cat. No. 5721B-011
Charger Module.

Provides charging circuitry for 5724-1 or one or two 5724-2 battery packs or one 5724B-004.

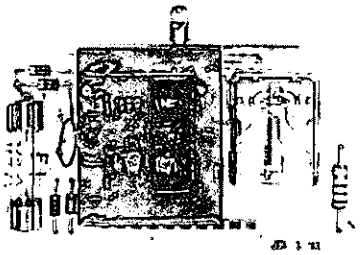

Cat. No. 5721B-012
AC Trouble Power Module.

Provides Line 2 power for trouble circuit when primary system power (Line 1) fails. Trouble signal will also sound when Line 2 power fails (double supervision).

Cat. No. 5721B-014
Battery Pack Interface Module.

Provides interface circuitry for 5724B-003 battery pack and charger.

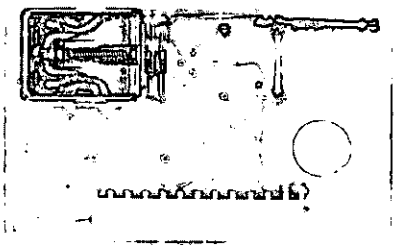

Cat. No. 5721B-015
Charger Module.

Provides charging circuitry for one 5724-1, one or two 5724-2 or one 5724B-004 battery packs. When this charger module is used, battery leads are supervised for open or short circuit conditions, and standby batteries are automatically tested (under load). A failure in either of two parameters will illuminate the yellow module trouble lamp and sound the system trouble buzzer.

SIGNAL CONTROL MODULES

Space is provided for one Cat. No. 5721B-020 series module in the Cat. No. 5721B Fire Alarm Control Panel. One Cat. No. 5721B-020 series module is required per system. These modules are placement supervised.

Cat. No. 5721B-021
Time Limit Cutout Module.

Provides automatic silencing of alarm signals after the expiration of a preset time interval. (Adjustable from 3 to 10 minutes), and lights the "Signals Timed Out" LED.

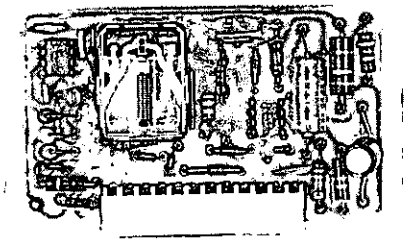

Cat. No. 5721B-022
March Time Module — 120 PPM.

For use with paralleled signals (AC or DC). Signals will sound at 120 PPM until silenced by "Signal Silence" or "System Reset" switch is actuated.

Cat. No. 5721B-023
Continuous Signal Module.

Provides circuitry for continuous operation of alarm signals.

Cat. No. 5721B-025
Master Code/Recall Module.

Master code alarm is 3-3-3 code signal that will sound until silenced by SIGNAL SILENCE switch on control panel. Recall signal of 60 pulses/minute is initiated with PUSH FOR RECALL button on this module.

Cat. No. 5721B-026
Signal Control Module, 10 Seconds On, 5 Seconds Off.

Upon alarm this module will cause alarm signals to sound at 120 strokes/minute for 10 seconds, followed by 5 seconds of silence. Operation repeats until silenced by SIGNAL SILENCE switch on control panel.

Cat. No. 5721B-028
Signal Control Module — 2-Stage Signals

Will give signals a 2-stage operation. First stage/second stage can be either 20 PPM/continuous or 20 PPM/120 PPM, jumper selectable. Time duration between stages is field adjustable between 30 and 90 seconds.

Cat. No. 5721B-041
1 Minute Signal Silence/Reset Inhibit Module — Optional

When used with 5721B FACP, this module will inhibit the use of the "Alarm Silence" and "Alarm Reset" functions for a period of 1 minute after the receipt of alarm. This module is used in conjunction with any of the 5721B-020 series signal control modules. It mounts on the 5721B FACP motherboard on a dedicated connector (P7). Use of the 5721B-041 is optional. The 5721B-041 is placement supervised.

©COPYRIGHT 1984 EDWARDS

A UNIT OF GENERAL SIGNAL

EDWARDS

5721B SERIES LOW VOLTAGE MULTIPLE-ZONE SYSTEM

REMOTE STATION MODULES

Space is provided for one Cat. No. 5721B-030 series module in the Cat. No. 5721B Fire Alarm Control Panel. Use of the Cat. No. 5721B-030 series modules is optional.

Cat. No. 5721B-031
Remote Station Module (Optional).

For transmitting alarm and trouble to Cat. No. 1365 remote station. Provides auxiliary SPDT, alarm operated contact. Manual disconnect switch and disconnect lamp on control panel.

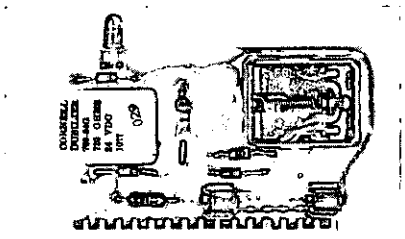

Cat. No. 5721B-032
Remote Station, Reverse Polarity Module (Optional).

For transmitting reverse polarity alarm to remote station. (Conforms to NEMA Standards SB3-1969. Provides auxiliary SPDT, alarm operated contacts. Manual disconnect switch and disconnect lamp on control panel.

Cat. No. 5721B-033
Municipal Tie Module (Optional).

For use with shunt *or* local energy type master box (Cat. No's. 1390 or 1391). Provides auxiliary SPDT alarm operated contact when used with local energy box. Manual disconnect switch and disconnect lamp on control panel.

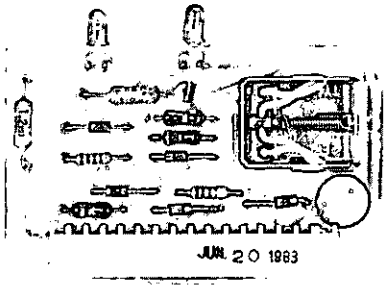

Circuit Strips

The following circuit strips mount in the Cat. No's. 5721B or 5722B Panels.

Cat. No. 5723B-111
5-Circuit Strip.

For use with Cat. No. 5721B and 5722B panels. Provision for mounting of any combination of 5 5703B series receiving, signaling or auxiliary relay modules. Provides common alarm operation of alarm signals and/or auxiliary relays.

Cat. No. 5723B-112
5-Circuit Strip, Programmable.

Similar to Cat. No. 5723B-111 except used when programming receiving, signaling or auxiliary relay modules.

Cat. No. 5723B-113
5-Circuit Strip, Programmable.

Similar to Cat. No. 5723B-112, except used when a coded alarm signal is required. (Used in conjunction with Cat. No. 5723B-001, -002 and -003 code transmitter strips).

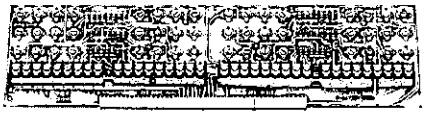

Cat. No. 5723B-001

Cat. No. 5723B-001
Code Transmitter Strip 12 Zone.

For use with 5721B and 5722B panels. Includes 12 zone code transmitters of 2, 3, or 4 digits per code (digit length selectable in field via dip switches, and each digit is field programmable, via jumper connection, from "1" to "9". Transmitters operate PNIS. When two or more 5723B series transmitters are used in the same system, operation between panels is SNIS. When 5723B series code transmitters are used, a 5721B-203 continuous signal module must be used. A 5723B-113 circuit strip and a separate 5703B series receiving module must be used for each required zone.

Cat. No. 5723B-002
Code Transmitter Strip — 8 Zone.

Same as Cat. No. 5723B-001, except with 8 transmitters.

Cat. No. 5723B-003
Code Transmitter Strip — 4 Zone.

Same as Cat. No. 5723B-001, except with 4 transmitters.

Secondary Power Battery Packs

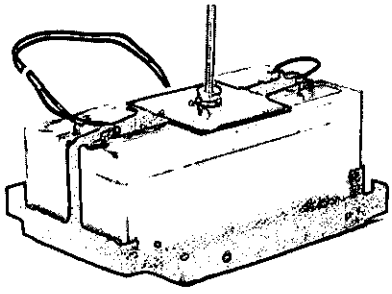

Cat. No. 5724-1

Cat. No. 5724-1
Battery Pack, 1.5 A.H.

Assembly, interconnecting cable, and rack. Sealed lead acid battery for system operation during failure of primary power source, when using 24 VDC signals. Requires Cat. No. 5721B-011 or 5721B-015 charger module in FACP. Mounts in Cat. No. 5721B.

Cat. No. 5724-2
Battery Pack, 4.5 A.H.

Assembly, interconnecting cable, and rack. Sealed lead acid battery for system operation during failure of primary power source, when using 24 VDC signals. Requires Cat. No. 5721B-011 or 5721B-015 charger module in FACP. Mounts in Cat. No. 5721B.

Cat. No. 5724B-003
Battery Pack & Charger — 20 A.H.

Sealed lead acid battery assembly, includes charger and interconnecting cable. For Cat. No. 5721B systems using 24 VDC signals when standby DC power is required. Requires 5721B-014 battery pack interface module. Mounts in separate 5730 wall box.

Cat. No. 5724B-004
Battery Pack and Charger, 9 A.H.

Assembly, interconnecting cable and rack. Sealed lead acid battery for system operation during failure of primary source when using 24 VDC signals. Requires Cat. No. 5721B-011 or 5721B-015 charger module in FACP. Mounts in Cat. No. 5721B.

5721B SERIES LOW VOLTAGE MULTIPLE-ZONE SYSTEM

Receiving (Alarm Initiating) Modules

The following modules plug into the Cat. No. 5723B series 5 circuit strips. Each 5703B series module listed below provides one alarm receiving zone.

Cat. No. 5703B-101
Alarm Receiving Module.
Provides the 5721B series FACP with one supervised, Class B initiating circuit for the connection of normally open devices. Includes field selected (N-O or N-C) auxiliary alarm contact rated at 3.0A. Separate red alarm and yellow trouble LED's. Placement supervised.

Cat. No. 5703B-102
Alarm Receiving Module.
Provides the 5721B series FACP with one supervised, Class B initiating circuit for the connection of smoke detectors or normally open devices. Includes field selected (N-O or N-C) auxiliary alarm contact rated at 3.0A. Separate red alarm and yellow trouble LED's. Placement supervised.

Cat. No. 5703B-103
Alarm Receiving Module.
Provides the 5721B series FACP with one supervised, Class A initiating circuit for the connection of normally open devices. Separate red alarm and yellow trouble LED's. Placement supervised.

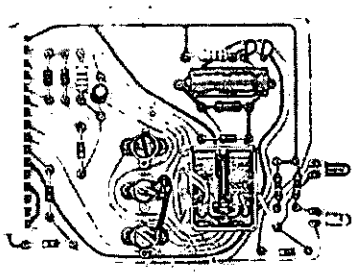

Cat. No. 5703B-105
Alarm Receiving Module.
Provides the 5721B series FACP with one supervised, Class A initiating circuit for the connection of smoke detectors or normally open devices. Separate red alarm and yellow trouble LED's. Placement supervised.

Cat. No. 5703B-106
Coded Station Module
Provides the 5721B with one supervised, Class B station coded initiating circuit. During Alarm Mode, all signals and auxiliary relays follow the code and the red "alarm" LED pulses at 120 PPM until system is reset. Separate red alarm and yellow trouble LED's. Placement supervised.

Cat. No. 5703B-107
Supervisory Receiving Module
Provides the 5721B series FACP with one supervised, Class B supervisory receiving circuit for the parallel connection of normally open supervisory contacts. Latching or non latching module operation and auxiliary supervisory contact operation (N.O. or N.C.) are field selectable via jumpers. Separate yellow "supervisory" and "trouble" LED's. Placement supervised.

Cat. No. 5703B-402
Alarm Receiving Module.
Provides the 5721B series FACP with one supervised Class B initiating circuit for the connection of smoke detectors or normally open devices. A switch is provided to allow the disconnection of this module from the FACP. If an alarm is received when the module is in "disconnect", the alarm will be received and annunciated by the module, but not by the FACP. Dead front cover must be removed to operate disconnect switch. Includes field selectable (N-O or N-C) auxiliary alarm contact rated at 3.0 amps. Separate red alarm and yellow trouble LED's. Placement supervised.

Cat. No. 5703B-405
Alarm Receiving Module.
Provides the 5721B series FACP with one supervised Class A initiating circuit for the connection of smoke detectors or normally open devices. A switch is provided to allow the disconnection of this module from the FACP. If an alarm is received when the module is in "disconnect", the alarm will be received and annunciated at the module, but not by the FACP. Dead front cover must be removed to operate disconnect switch. Includes auxiliary contacts for alarm and trouble (1 Form C, rated at 3 amps). Separate red alarm and yellow trouble LED's. Placement supervised.

Signal (Alarm Indicating) Modules

The following modules plug into the Cat. No. 5723B series 5 circuit strips. Each 5703B series module listed below provides one alarm signaling zone.

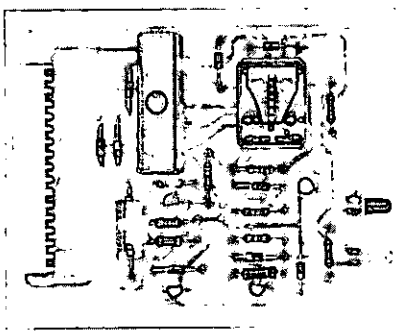

Cat. No. 5703B-201
Alarm Signaling Module.
Provides the 5721B series FACP with one supervised, Class B signal circuit powered by 24 VDC or 120 VAC. Maximum signal current is 3 amps. Includes automatic signal disconnect circuitry for overcurrent protection, separate red alarm and yellow trouble LED's. Placement supervised.

Cat. No. 5703B-203
Alarm Signaling Module.
Provides the 5721B series FACP with one supervised, Class A signal circuit powered by 24 VDC or 120 VAC. Maximum signal current is 3 amps. Includes automatic signal disconnect circuitry for overcurrent protection, separate red alarm and yellow trouble LED's. Placement supervised.

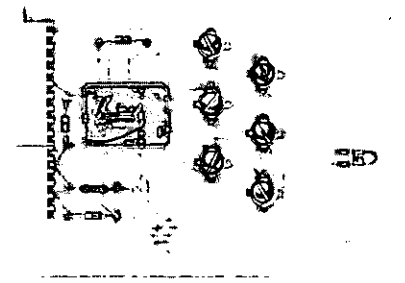

©COPYRIGHT 1986 EDWARDS

A UNIT OF GENERAL SIGNAL

EDWARDS

5721B SERIES LOW VOLTAGE MULTIPLE-ZONE SYSTEM

Auxiliary Relay Module

The following Module plugs into the Cat. No. 5723B series 5 Circuit Strips.

Cat. No. 5703B-301
Auxiliary Relay Module.
Provides 5721B FACP with 2 isolated, alarm operated relay contacts. Contacts may be either N-O or N-C, are field selectable and rated at 3 amps. Green LED illuminates when relay energizes. Placement supervised.

Power Extenders

Cat. No. 5706B-010
Signal Circuit Power Extender.
Provides 3.0 amps of additional current for 24 VDC signals. Complete with primary power supervision circuitry. Mounts in 5721B FACP in place of 2 5723B series circuit strips, or in 5722B behind red door, or in place of (2) 5723B series circuit strips. Placement supervised.

Cat. No. 5726B-010
Signal Current Power Extender.
Provides 3.0 amps of additional current for 24 VDC signals. Complete with primary power supervision circuitry. Mounts in 5721B or 5722B in place of 5724-1 or 5724-2. Placement supervised.

Cabinets and Back Boxes

Cat. No. 5730
Back Box.
25" H., 20⅛" W., 5⅜" D. Capacity for one 5721B, 5722B, or 5724B-003. 3 dead front covers required per back box. Order separately. Textured Georgian Bronze finish.

Cat. No. 5734
Dead Front Cover — Blank.
One required for each 5723B series transmitter strip or each spare position on 5721B or 5722B. Textured Laurentian Cream finish.

Cat. No. 5735B-001
Dead Front Cover — 5 Circuit.
For use with 5721B/5722B FACP when only one 5723B 5-circuit strip is installed in a vertical slot. Holes in DFC will accommodate 5703B series 2 LED design. Complete with designation strip and LED alignment strip. Textured Laurentian Creme finish.

Cat. No. 5735B-002
Dead Front Cover — 10 Circuit.
For use with 5721B/5722B FACP when 2-5723B 5-circuit strips are installed in a vertical slot. Holes in DFC will accommodate 5703B series 2 LED design. Complete with designation strip and LED alignment strip. Textured Laurentian Creme finish.

Cat. No. 5736B-001
Dead Front Cover — Master.
One required per 5721B system. This cover is for common control strip area (Mother Board). Complete with LED alignment strip. Textured Laurentian Creme finish.

Flush Trim

Cat. No. 5731-1
Flush Trim-Single.
For flush Mounting one 5730 back box. Textured Laurentian Cream finish.

Cat. No. 5731-2
Flush Trim.
Required in addition to 5731-1 when multiple 5730's are mounted vertically. One 5731-2 required for each additional 5730. Textured Laurentian Cream finish.

Cat. No. 5731-3
Flush Trim.
Required in addition to 5731-1 when multiple 5730's are mounted horizontally. One 5731-3 required for each additional 5730. Textured Laurentian Cream finish.

Miscellaneous

Cat. No. 5712
Remote Trouble Unit.
Solid-state, 2-wire unit complete with trouble buzzer, local trouble silence push and trouble lamp (LED). Standard 2 gang faceplate. Finish is textured Laurentian cream.

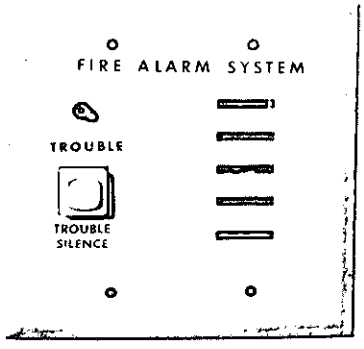

Cat. No. 5712

Cat. No. 5733B
Supervisory Meter.
Consists of voltmeter (0-50V) to measure system DC voltage and milliameter (0-5mA) to measure supervisory loop current. Placement supervised.

Guide Specifications

(Specifications data for optional features are indicated in parenthesis. Omit references to features that are not required).

Contractor shall furnish and install one Fire Alarm Control Panel Cat. No. 5721B or equivalent. The panel shall be U.L. Listed. It shall meet requirements for power limited fire protection signaling circuits of Part C of Article 760 of the National Electrical Code (NFPA 70).

The Control Panel shall automatically sound the trouble buzzer, light the trouble lamp and cause the auxiliary trouble contacts to transfer when a fault occurs on any supervised circuit. A trouble silence switch shall silence the trouble buzzer. The trouble signal shall resound when the fault is cleared (ring back) and restoration of the trouble silence switch will silence the trouble buzzer and extinguish the trouble lamp.

The Control Panel shall have a momentary "Lamp Test" switch to test all zone and module lamps. City tie trouble and disconnect lamps may be tested by momentarily placing the city disconnect switch in the disconnect position.

The Control Panel shall include an auxiliary Form "C" contact for each of the following: panel alarm, panel trouble and remote station alarm. The Control Panel shall provide terminals with an auxiliary 24VDC output.

Each alarm receiving zone shall include separate red alarm and yellow trouble lamps to visually indicate circuit status. The alarm lamp shall flash for alarm and the trouble lamp shall light steady for trouble. The alarm receiving zone(s) shall be placement supervised and provide for: (select from following).

— supervised, Class B circuit for normally open initiating devices, shall include provision for field selectable normally open or normally closed SPST, 3.0A auxiliary alarm contacts. 5703B-101.

— supervised, Class B circuit for low voltage ionization and/or photo-

Heat Detectors

Cat. No. 280A Series Rate-of-Rise and Fixed Temperature Single Pole — Normally Open Contact.

Use For Property Protection Only.

Features

- WHITE — blends with ceiling.
- LOW PROFILE — with wide base covering mounting plate and box.
- POSITIVE OPERATING INDICATION — when fixed temperature element is activated center disc falls free from detector. (Detector replacement is required.)
- ON SITE TESTING — Rate-of-rise feature is automatically self-restoring permitting on site testing of this feature.
- EASY INSTALLATION — twist and it locks in place; same mounting plate for 3¼ or 4 inch octagonal box, or open mounting. Terminals clearly marked.
- WIDE SPACING — U.L. rated for 50 foot centers on rate-of-rise *units*, 25 foot centers on fixed temperature units. (See Specification Table for details.)
- LISTINGS AND APPROVALS — UL, FM, ULC.

Description

This series of EDWARDS heat detectors provides high quality, reliability, and the ultimate in design and decor. The low silhouette and pure white finish blend with practically all ceiling designs to provide an unobtrusive unit.

Heat Detectors are available with 135 or 194 degree Fahrenheit ratings; for fixed, or fixed and rate-of-rise of temperature operation. All detectors are single circuit with normally open contacts.

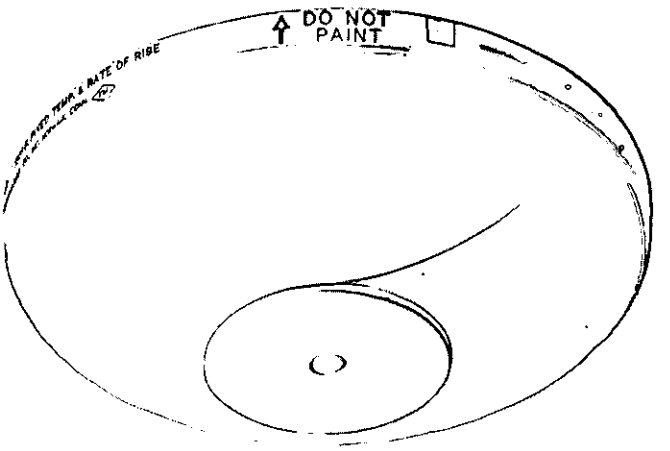

The Heat Detector is available with either a metal or a white plastic reversible mounting plate. Both the plastic and metal plates are designed for surface or flush mounting.

The Detector Specifications table lists those detectors which are available with a 10K ohm or 560 ohm resistor in series with the alarm contact, for use on smoke detector circuits.

WARNINGS

1. DANGER - This device does not protect life against fire and smoke. In most fires, hazardous levels of smoke, heat and toxic gases can build up before a heat detector would initiate an alarm. Independent studies indicate that heat detectors should only be used when property protection alone is involved. In cases where life safety is a factor, the use of smoke detectors is recommended.

The intended use of the Edwards 280A Series Heat Detector is to provide one source of information that is supplemental to smoke detection to increase the probability that an early warning will be provided so that property can be safeguarded. Heat detectors do not always *detect* fires because the fire may be a slow smoldering, low heat type (producing smoke) or because they may not be near where the fire occurs, or because the heat of the fire may bypass them. This detector will not detect oxygen levels, smoke, toxic gases, or flames. Accordingly, this device should only be used as a part of a broadly based program of fire safety which would include a variety of sources of information on heat and smoke levels, visual sighting of the fire, extinguishment systems, and other safety measures.

If they are spaced in accordance with the directions in the Detector Specifications table, they can contribute, within an overall fire safety program, to reducing the risk of avoidable property losses. Under no circumstances should these devices be relied on as the sole measure to ensure fire safety. Danger will result if these devices are relied on to any degree for the protection of human life.

2. DANGER - This device does not contain a built-in signal. Alarm signals can only be generated by interconnection with separately installed signaling devices.

3. DANGER - This device will not operate without electrical power, and fires often cause cutoffs of electrical power. This device *does not contain a battery backup power supply.* If the electrical circuit feeding the device is cut, or is not providing power for any reason, this device will not detect heat or provide any warning of a possible fire, nor will it provide any warning that it is not functioning.

4. DANGER - The rate-of-rise feature on the Edwards 280A Series Heat Detector is subject to failure over time. The rate-of-rise feature should be tested by a qualified fire protection specialist annually to ensure that it is in working order.

©COPYRIGHT 1987 EDWARDS

HEAT DETECTORS

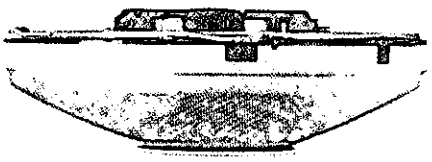

Specifications

Edwards Catalog No.	Number of Circuits	Normal Condition of Contacts	Rate-of-Rise or Fixed Temp. (See Note 6)	U.L. Temp. Rating °F	U.L. Max. Ambient Ceiling Temp. Rating °F	Maximum Coverage (See Note 4)		
						Sq. Ft.	Spacing	Max. Distance from Wall (See Note 5)
281A 282A	1 1	Open Open	ROR & Fixed ROR & Fixed	135 194	100 150	2,500	50'	25'
283A 284A	1 1	Open Open	Fixed Fixed	135 194	100 150	625	25'	12½'

Contact rating on all models is 3 amps @ 6 to 125 VAC, 1.0 amps @ 6 to 28 VDC, 0.3 amps @ 125 VDC, and 0.1 amps @ 250 VDC.

Notes:

1. Add suffix "R" to Cat. No. 281A and 282A for unit to be supplied with integral 10,00 ohm resistor i.e. 281AR, 282AR.
2. Add suffix "L" to Cat. No. 281A, 282A, 283A and 284A for unit to be supplied with integral 560 ohm resistor i.e. 281AL.
3. For white plastic reversible mounting plate in place of standard metal plate add suffix "PL" to Cat. No. i.e. 281A-PL.
4. Maximum detector coverage has been determined by U.L. to provide detection time equal to sprinkler devices spaced at 10 ft. intervals (100 square ft. area) on a smooth ceiling 15 ft. 9 inches high. Higher ceilings can adversely affect detection time. In some instances earlier detection may be obtained by reducing the spacing between detectors. (See appendix C, Guide for Automatic Detector Spacing, NFPA 72E-1987, Automatic Fire Detector).
5. Maximum distance shown is from any wall partition or ceiling projection extending down more than 12 inches.
6. Rate-of-Rise rating is 15°F/Min.-Self Restoring.

Mounting

Using Metal Mounting Plate

FOR MOUNTING INFORMATION SEE INSTRUCTION SHEET P-847550-0706 ISSUE B

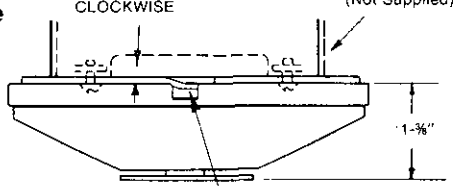

Flush Mount Conduit Wiring

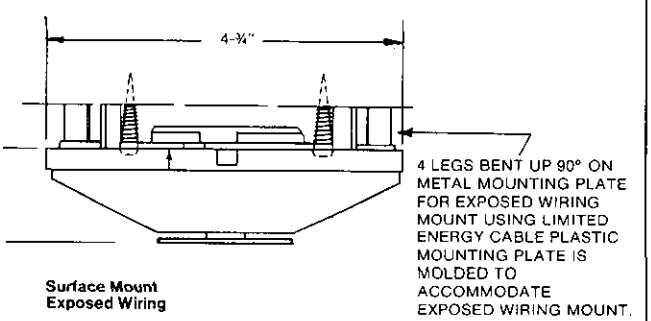

Surface Mount Exposed Wiring

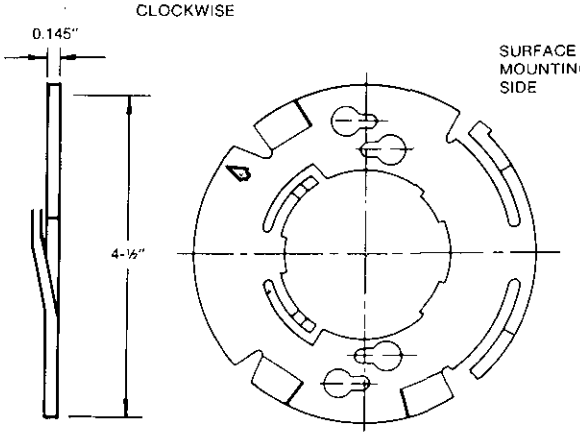

FRONT VIEW

Metal Mounting Plate P-803020

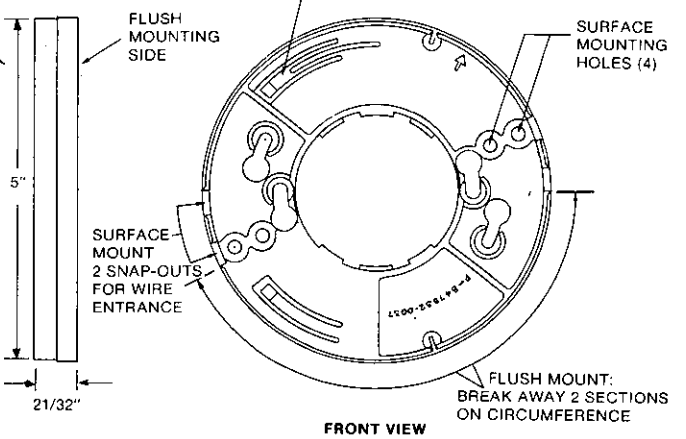

FRONT VIEW

Plastic Reversible Mounting Plate P-847532-0037

NON-CODED FIRE ALARM STATIONS

Fire Alarm Stations

Features

- PULL LEVER
- SIMPLE POSITIVE OPERATION
- BREAK GLASS
- ATTRACTIVE, STREAMLINE DESIGN
- SINGLE OR TRIPLE ACTION
- UL LISTED

Description

Edwards Cat. No. 270 Series Non-Coded Fire Alarm Stations are sturdy, attractive and designed for economical installation.

The station is available in the following operational and functional designs:

— The basic Cat. No. 270 Series provides a single action, break glass initiating station. It is available with normally open (N.O.), normally closed (N.C.) or combination N.O./N.C. contacts. The basic Cat. No. 270 Series have screw terminals for field connection. The Cat. No. 270A Series Manual Stations have 6" wire leads.

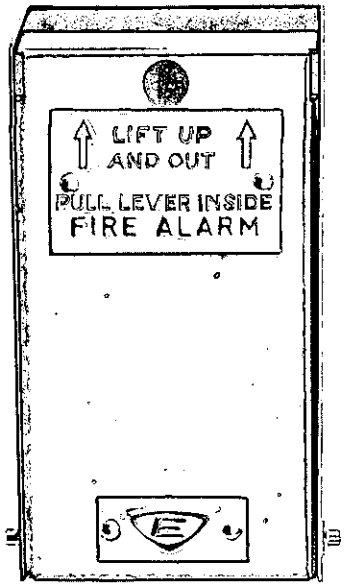

— The Cat. No. 270T Series are used with the Cat. No. 273 Steel Housing and provides a triple action station. The station is available with normally open or normally closed initiating contacts. The Cat. No. 270T Series Station also includes a trouble "tell tale" contact. The "tell tale" contact is available as normally open or normally closed and provides contact switching when the "second" action of the triple action device occurs. Screw terminals are provided for field connection.

— The Cat. No. 270P Series is a break glass, normally open presignal station.

Cat. No. 270-SPO

The pull of the lever sounds an alarm on all presignal indicating devices. Inserting a key and turning it will initiate a general evacuation alarm. Screw terminals are provided for field connection.

All non-coded stations are designed for either flush or surface mounting. For flush mounting a 4" square box with single gang plaster cover should be used. For surface mounting the Cat. No. 270 Series or 270P Series use; P-027193 Cast Box, P-039250 Steel Box, or Cat. No. 1291 Housing for weatherproof enclosure. For surface mounting the Cat. No's. 270T/273 Series Triple Action Station use P-039250-0002 Steel Box.

WARNING: These devices will not operate without electrical power. As fires frequently cause power interruptions, we *suggest* you discuss further safeguards with your local fire protection specialist.

Specifications

FINISH: **Fire Alarm Red with Aluminum Strips**

Cat. No.	UL Listed	Switch contacts: Single Pole	Switch contacts: Double Pole	Switch contacts: Closed Circuit	Switch contacts: Open Circuit	Field Connections: Screw Terminals	Field Connections: Wire Lead	Pre-Signal	Series Resistor	Trouble "Tell tale" Contact
270-DOC	x		x	x	x	x				
270-DPC			x	x		x				
270-DPO	x		x		x	x				
*270L-DPO	x		x		x	x			x	
270P-DPO	x		x		x	x		x		
*270LP-DPO	x		x		x	x		x	x	
270P-SPO	x	x			x	x		x		
*270LP-SPO	x	x			x	x		x	x	
*270R-DPO	x		x		x	x			x	
*270R-SPO	x	x			x	x			x	
*270RP-SPO	x	x			x	x		x	x	
270-SPC		x		x		x				
270-SPO	x	x			x	x				
*270L-SPO	x	x			x	x			x	
270A-DPO	x		x		x		x			
*270AL-DPO	x		x		x		x		x	
270A-SPO	x	x			x		x			
*270AL-SPO	x	x			x		x		x	
270TC-DPO			x		x	x				x
270TC-SPO		x			x	x				x
270TO-DPO			x		x	x				x
270TO-SPO		x			x	x				x

*For use on smoke detector circuits only.

©COPYRIGHT 1986 EDWARDS

NON-CODED FIRE ALARM STATIONS

Mounting

CAT. NO. 270 SERIES STATION

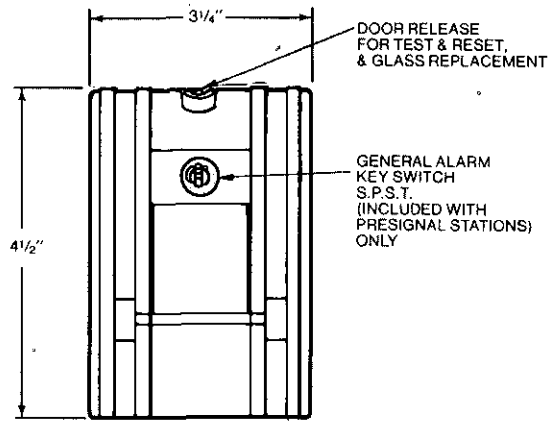

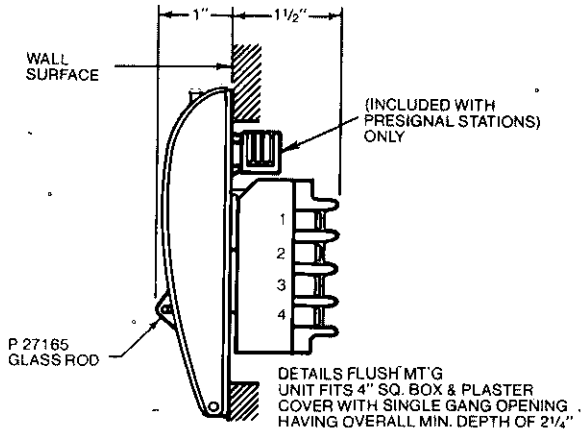

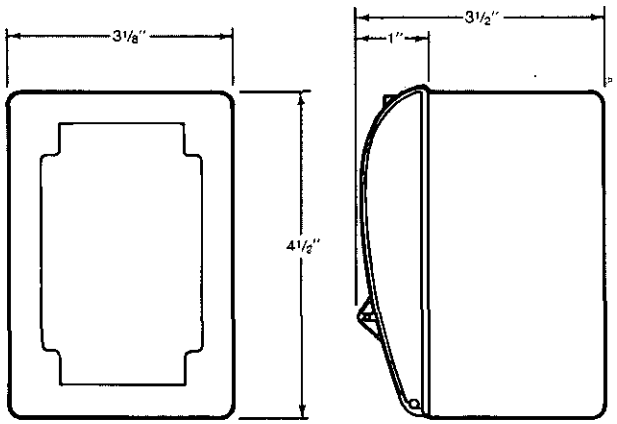

FRONT — STEEL SURFACE BOX P-039250 — SIDE

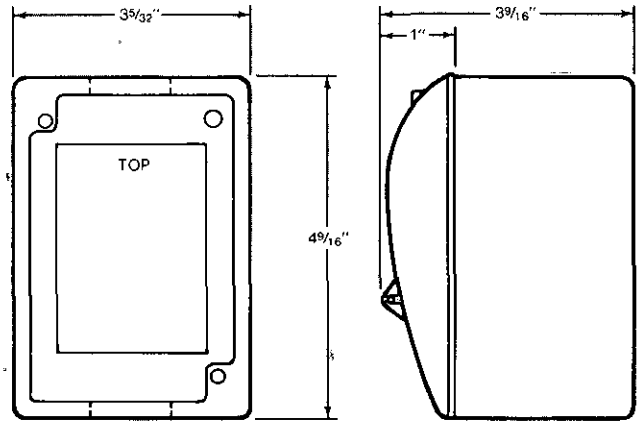

FRONT — CAST SURFACE BOX P-027193 — SIDE

CAT. NO'S. 270T/273 SERIES STATION

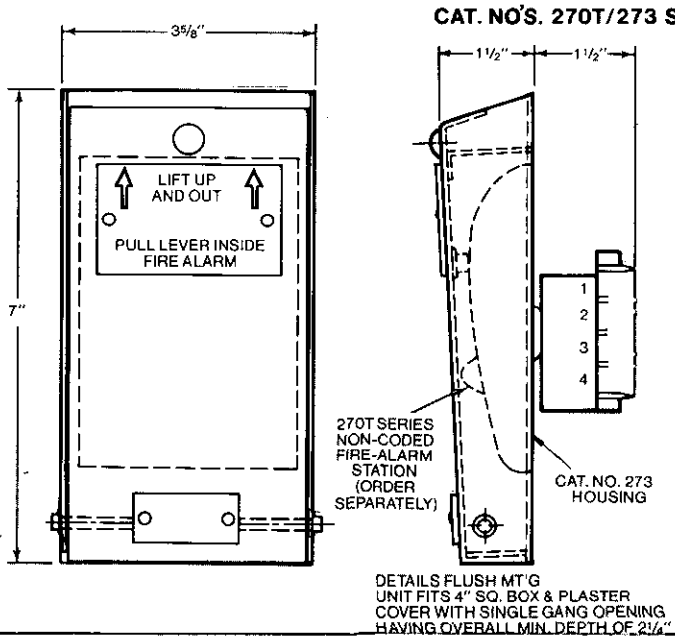

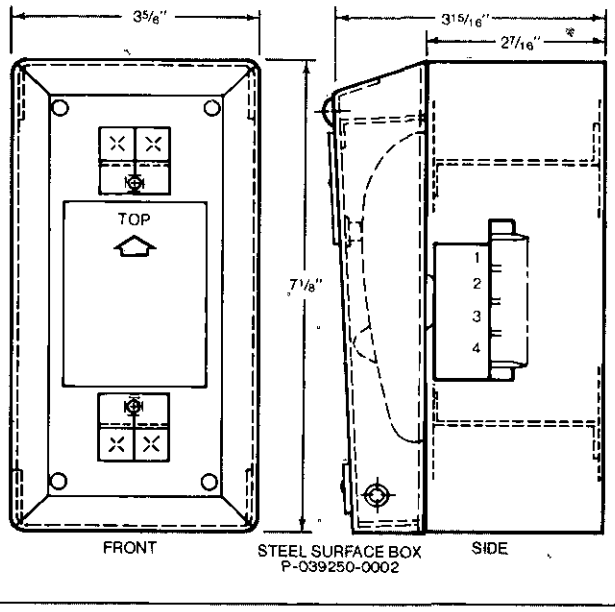

FRONT — STEEL SURFACE BOX P-039250-0002 — SIDE

EDWARDS®
A UNIT OF GENERAL SIGNAL

Product Line Descriptions

Strobes

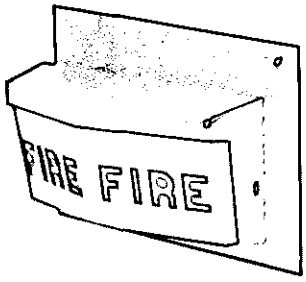

Cat. No. 894B-001 Strobe Unit

Cat. No. 894B-001
Strobe — 24 VDC
Polarized for use on supervised, parallel connected 24 VDC FACP signal circuits.

Cat. No. 894B-002
Strobe — 120 VAC
For use on supervised, parallel connected 120 VAC FACP signal circuits.

All strobes are supplied with 9" long, #18AWG color-coded wire leads. An "in" and "out" lead is provided for each termination to permit compliance with NFPA code requirements for supervising the connection of installation wiring.

Speakers

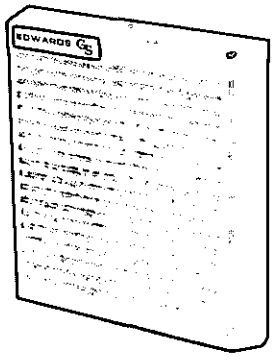

Cat. No. 894B-003 Speaker Unit

Cat. No. 894B-003
Speaker — Cone Type, 4" Diameter
With series capacitor for use on 70.7 VRMS supervised speaker circuit. Power taps at ½w, 1w, 2w and 4w.

Cat. No. 894B-004
Speaker — Re-Entrant Type
With series capacitor for use on 70.7 VRMS supervised speaker circuit. Power taps at 2w, 4w, 8w and 15w.

Cat. No. 894B-005
Speaker — Re-Entrant Type
With series capacitor for use on 70.7 VRMS supervised speaker circuit. Power taps at 1w and 2w.

All cone-type speakers are supplied with 9" long, #18AWG color-coded wire leads. An "in" and "out" lead is provided for each termination to permit compliance with NFPA code requirements for supervising the connection of installation wiring. Power tap selection is made via an integral jumper.

All re-entrant type speakers have a multiple tap transformer with 6" long, #18AWG color-coded wire leads for power tap selection and circuit connection.

Horns

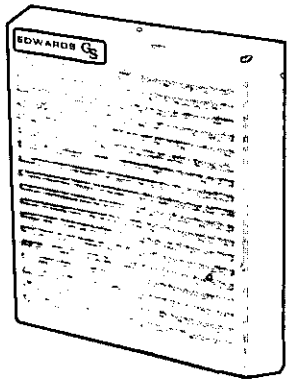

Cat. No. 894B-206 Horn Unit

Cat. No. 894B-206
Horn — 24 VDC
Polarized for use on supervised, parallel connected 24 VDC FACP signal circuits.

Cat. No. 894B-007
Horn — 120 VAC
Polarized for use on supervised, parallel connected 120 VAC FACP signal circuits.

All horns are supplied with 9" long, #18AWG color-coded wire leads. An "in" and "out" lead is provided for each termination to permit compliance with NFPA code requirements for supervising the connection of installation wiring.

Horn/Strobe Combination

Cat. No. 895B-201 Horn/Strobe Unit

Cat. No. 895B-201
Horn/Strobe Combination Unit — 24 VDC
Polarized for use on supervised, parallel connected 24 VDC FACP signal circuits. Horn circuit and strobe circuit are separate, but may be parallel connected.

Cat. No. 895B-002
Horn/Strobe Combination Unit — 120 VAC
Polarized for use on supervised, parallel connected 120 VAC FACP signal circuits. Horn circuit and strobe circuit are separate, but may be parallel connected.

All horn/strobe combination units have separate leads for both the horn and strobe units. Each unit is supplied with 9" long, #18AWG color-coded wire leads. An "in" and "out" lead is provided for each termination to permit compliance with NFPA code requirements for supervising the connection of installation wiring.

Speaker/Strobe Combination

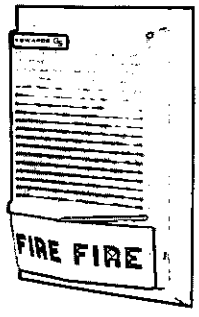

Cat. No. 896B-001 Speaker/Strobe Unit, Shown with Optional Cat. No. 897B-001 Trim Plate.

©COPYRIGHT 1986 EDWARDS

A UNIT OF GENERAL SIGNAL

EDWARDS

ALARM INDICATING APPLIANCES

Cat. No. 896B-001
Speaker/Strobe Combination Unit
Strobe is polarized for use on supervised, parallel connected 24 VDC FACP signal circuits. Speaker is cone-type and has series capacitor for use on 70.7 VRMS supervised speaker circuits. Power taps at 0.5w, 1w, 2w and 4w.

Cat. No. 896B-002
Speaker/Strobe Combination Unit
Strobe is polarized for use on supervised, parallel connected 120 VAC FACP signal circuits. Speaker is cone-type and has series capacitor for use on 70.7 VRMS supervised speaker circuits. Power taps at 0.5w, 1w, 2w and 4w.

Cat. No. 896B-003
Speaker/Strobe Combination Unit
Strobe is polarized for use on supervised, parallel connected 24 VDC FACP signal circuits. Speaker is re-entrant type and has series capacitor for use on 70.7 VRMS supervised speaker circuits. Power taps at 1w and 2w.

Cat. No. 896B-004
Speaker/Strobe Combination Unit
Strobe is polarized for use on supervised, parallel connected 120 VAC FACP signal circuits. Speaker is re-entrant type and has series capacitor for use on 70.7 VRMS supervised speaker circuits. Power taps at 1w and 2w.

Cat. No. 896B-005
Speaker/Strobe Combination Unit
Strobe is polarized for use on supervised, parallel connected 24 VDC FACP signal circuits. Speaker is re-entrant type and has series capacitor for use on 70.7 VRMS supervised speaker circuits. Power taps at 2w, 4w, 8w and 15w.

Cat. No. 896B-006
Speaker/Strobe Combination Unit
Strobe is polarized for use on supervised, parallel connected 120 VAC FACP signal circuits. Speaker is re-entrant type and has series capacitor for use on 70.7 VRMS supervised speaker circuits. Power taps at 2w, 4w, 8w and 15w.

All speaker/strobe combination units have separate leads for both the speaker and strobe units. Each section is supplied with 9" long, color-coded wire leads. An "in" and "out" lead is provided for each termination to the strobe and the cone-type speaker to permit compliance with NFPA code requirements for supervising the connection of installation wiring.

The re-entrant type speaker has a multiple tap transformer with 6" long, #18AWG color-coded wire leads for power tap selection and circuit connection.

Typical Connection Diagrams: *

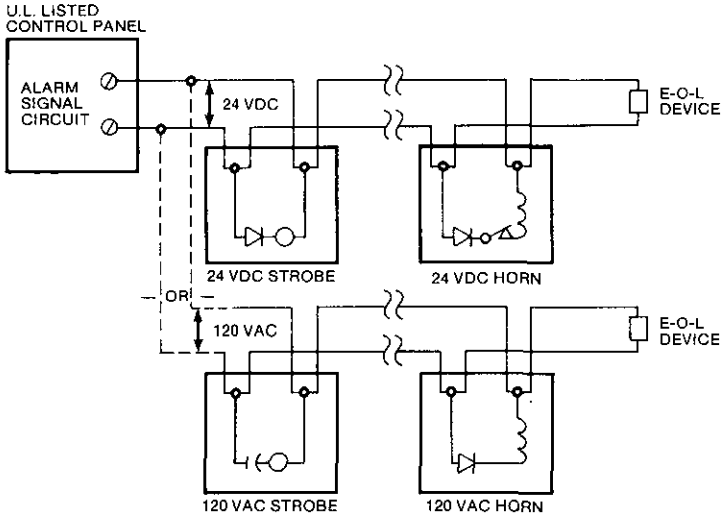

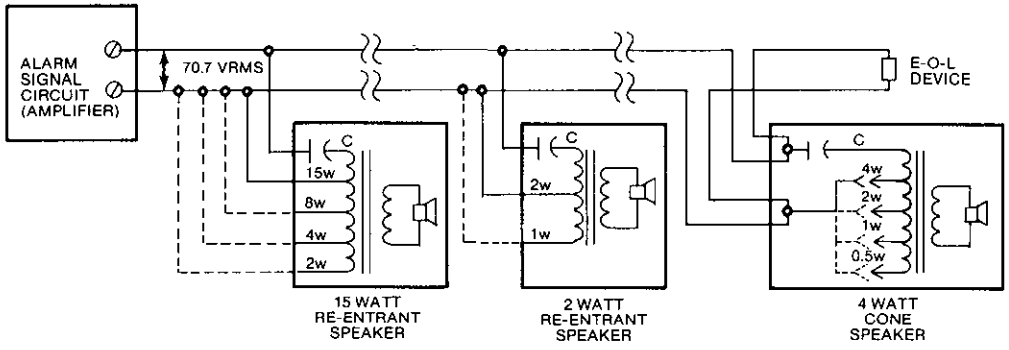

*For reference only, please refer to the connection diagram packaged with each product.

PHOTOELECTRONIC SMOKE DETECTORS

AREA TYPE, DC POWERED TWO WIRE

DESCRIPTION

Series 425C are photoelectronic smoke detectors operating on the light scattering concept. A pulsed infrared light emitting diode is used as the light source and a high speed photodiode as the sensing element.

An alarm relay contact set (Form C SPDT) for auxiliary functions and/or an integral heat sensor (135°F) are available as options.

APPLICATION

Series 425C two wire smoke detectors are suited for Commercial, Industrial, Institutional, and Residential fire alarm systems. The detector is intended for two wire connection to compatible UL listed 12 and 24 volt DC fire alarm control units. All models are easily converted to non-latching operation.

Those equipped with auxiliary alarm contacts are also suitable for releasing service.

INSTALLATION

Series 425C smoke detectors mount to standard single gang or 4" octagonal electrical boxes, and to WIREMOLD No. 5739 fixture boxes. All field wiring connections are made to a terminal block on the printed circuit board. This area is accessed by depressing the cover release tab and opening the hinged cover. System wiring easily fits through the opening in the back of the smoke detector. A field "knock out" area is provided for use when power limited surface wiring is used.

APPROVALS

The smoke detector is for use in commercial fire protective signaling systems (NFPA 71, 72A, 72B, 72C, or 72D) and in household fire warning systems (NFPA 74).

Listed by Underwriters Laboratories, Inc.; California Fire Marshal approved.

model	description
425C	smoke detector
425CT	smoke detector with heat sensor (135°F)
425CR	smoke detector with form C alarm contact set
425CRT	smoke detector with form C alarm contact set and 135°F heat sensor

ELECTRICAL SPECIFICATIONS — All Models	
Standby Voltage*†	10-30 VDC or 15-30 VFWR
Standby Current Max.	50 μA
Surge Current	0.4 μA seconds
Alarm OFF Set Voltage	8.0 VDC ±1.0 volts
Alarm Voltage Max.	33 VDC
Alarm Current	50 mA ±10% @ 24 VDC
Alarm Current @ 10 VDC	40 mA min.
To insure reset, reduce detector voltage to 4.0 volts or less or current to 1 mA or less. Reset time: 1 second.	
Contact Rating — 425CR and 425CRT:	2A @ 30 VDC or 120 VAC resistive.

†Actual max. — min. is +10%; -15%

*VDC — filtered; 10% maximum ripple
VFWR — unfiltered full wave rectified

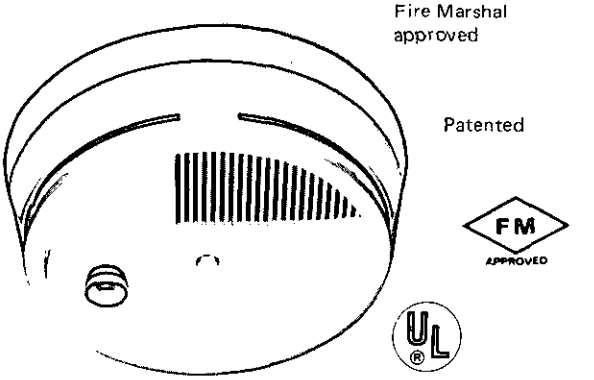

- **UL 268 listed**
- **Alarm verification**
- **Power/alarm indicator LED**
- **Low current consumption**
- **Functional test**
- **Tamper resistant hinged cover**
- **Integral heat sensor (optional)**
- **Auxiliary alarm contacts (optional)**
- **RFI and line transient protection**

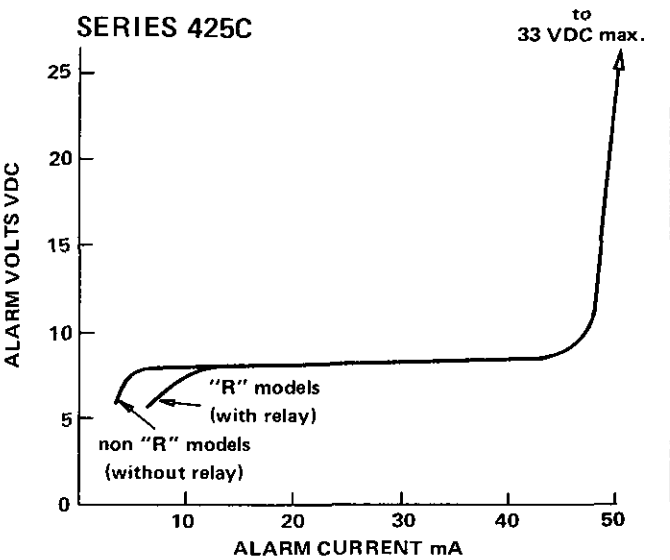

WIRING CONNECTIONS

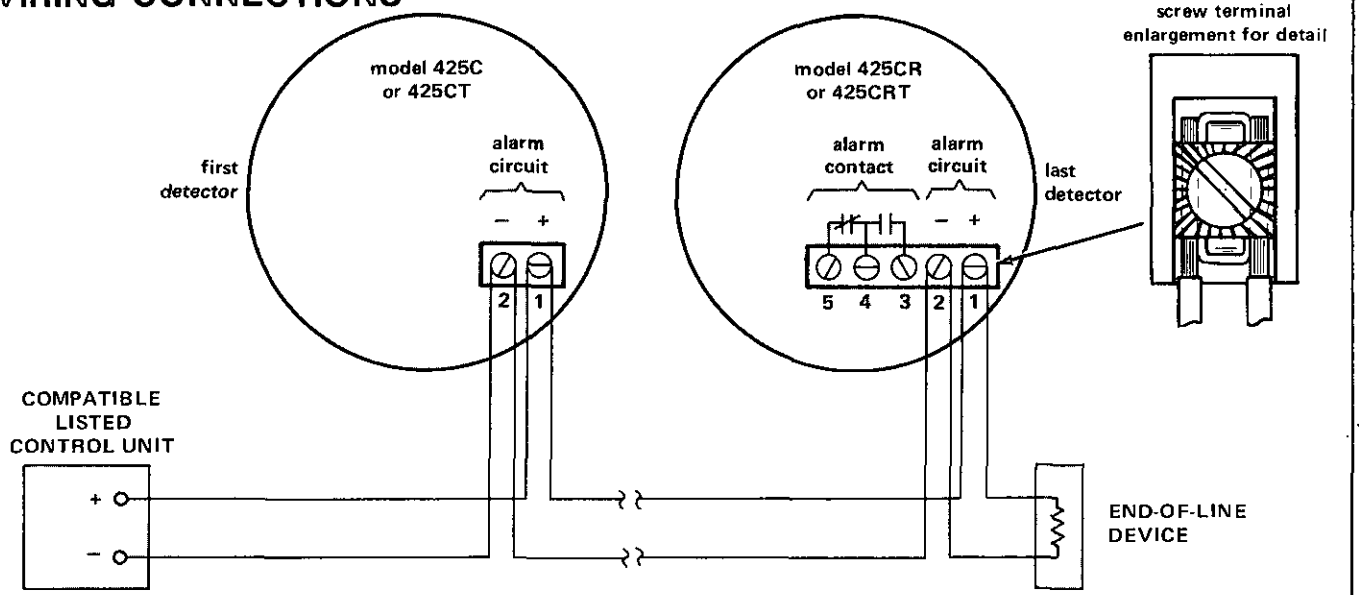

NOTES: 1) For emergency operation (Class A), return detector wiring to appropriate control unit terminals.
2) Detector screw terminals are designed to prevent looping of unbroken wire. To ensure supervision, wire runs must be broken at terminals (see above diagram).

PRODUCT DATA

NOMINAL SENSITIVITY SETTING

S = 3.3%/foot (0.47 dB/m)

OPERATING TEMPERATURE RANGE

32°F to 120°F
0°C to 49°C

OPERATING HUMIDITY RANGE

0 to 95% RH

DETECTOR SIZE

diameter	6.1 in.	15.5 cm
height	2.0 in.	5.0 cm
weight	8.8 oz.	0.25 kg

PACKAGING

20 detectors are packed in a carton
15 x 16 x 18 inches, 14 lb.
(38 x 40.5 x 46 cm, 6.3 kg)

SMOKE DETECTOR SPACING

On smooth ceilings (as defined in NFPA 72E), spacing of 30 feet (9.1 meters) may be used as a guide. Other spacing may be used depending on ceiling height, high air movement, and other conditions or response requirements.

SPECIFICATIONS

The smoke detectors shall be model 425C ( ) and shall operate on the photoelectronic light-scattering principle. The detectors shall be listed by Underwriters Laboratories, Inc.

The smoke detector shall contain an infrared LED light source and a light sensing photodiode. These components shall be positioned such that when smoke particles enter the sensing area, light from the LED reflects onto the photodiode. When the amount of light reflected onto the photodiode reaches the sensitivity setting, the smoke sampling rate shall increase to twice (2x) normal. The alarm signal shall be verified by requiring three (3) successive smoke sensings above the sensitivity setting.

Detector alarm shall occur only after verification and will cause the normally flashing power indicator LED to light continuously and the alarm circuit to operate. The detectors shall be capable of latching or non-latching alarm functions. The detectors shall be non-polar and shall provide for field sensitivity measurement and easily operated functional field test.

The detectors shall be equipped with an integral 135°F (57°C) heat sensor (optional on models 425CT and 425CRT).

The detectors shall be a single part with a hinged cover and include a concealed tamper-resistant latch. The detector shall include insect screens.

All wiring terminations shall be to clamp-type screw terminals protected by a terminal block cover. The smoke detector shall mount to a standard single gang electrical box, a 4" octagonal electrical box, or WIREMOLD No. 5739 fixture box.

ELECTRO SIGNAL LAB, INC.
1022 Hingham Street, Rockland, MA 02370
Telephone (617) 871-1800

distributed by:

Bulletin 2281-SU2 October 1985
Appearance and details subject to change without notice.

Telephone: (201) 670-0005

Institutional
Systems Service Corp.

60 West Prospect Street, Waldwick, New Jersey 07463

October 9, 1987

Ocean County Construction
Inspection Department
CN 2191
32 Hadley Avenue
Toms River, New Jersey 08754

Attention: Mr. Anthony Avello
Fire Sub-Code Official

Re: Brick Township High School
Fire Alarm System

Dear Mr. Avello:

Enclosed herewith please find product information and permit applications for fire sub-code and electrical for the subject project. This installation will consist of the following equipment:

One (1)	Edwards Company 5721-B 15-Zone Fire Alarm Control Panel with battery backup and municipal connection capability.
50	Horn/Strobe Signals
300 (Approx.)	Thermal Detectors, Smoke Detectors and Manual Pull Stations.

The estimated amount of this project with installation is-------$50,000.00.

We will be proceeding as authorized by Mr. Stutts this date using Purchase Order #87-2805.

Since this project will be installed on an emergency basis, the number of signal, detection and pull station devices is approximate. The number of zones is also approximate, since we do not know how many devices will be required for the 15 zones we are allowing for this project. If we find that additional zones are necessary due to too many devices within each Zone, we will divide the zone accordingly.

As the installation progresses, we will keep an ongoing record drawing of the zones and number of devices in each zone by category. When the project is completed, there will be a final drawing which will show every device by category of the zone in which they are installed.

Mr. Anthony Avello
Fire Sub-Code Offician
Ocean County Construction
Inspection Department

October 9, 1987

In general, thermal detection devices of fixed temperature and rate of rise type will be installed in all classrooms, storage areas, bathrooms, boiler room, slop sinks, above the ceiling, attic spaces, etc.

Photoelectronic smoke detectors will be installed in all corridors, tops of stairwells, elevator shafts, etc.

Manual pull stations will be installed within 5' of each exit door, the general offices, stage exits, and boiler room at a height of 48" from the floor.

Strobe/Signal devices will be installed in sufficient amounts to be heard throughout the entire building.

Protective guards will be installed over all initiating and signal devices in hazard areas such as gymnasiums, locker rooms, etc.

When completed, the entire installation will be state of the art, battery backup, DC and will meet all current state and local codes governing these systems, specifically, state of New Jersey uniform fire code which incorporates NFPA, BOCA and NEC requirements.

Please advise if there are permit fees for each of the permits submitted, and we will forward a check for same.

Please feel free to stop in to go over the job at any time with our foreman on the job, Keith Schuck.

Our priority for commencement of this job will be to get all of the fire signals and pull stations operational so at least a manual evacuation system is available. We will then start the installation of detection equipment by zone.

If I or my partner, Frank LoRusso, can be of additional assistance with this project, please contact me at 201-670-0005.

Very truly yours,

INSTITUTIONAL SYSTEMS SERVICE CORP.

Frederick A. Robinson

Frederick A. Robinson
Service Sales Manager

FAR:mg
Encl.
Copies: Mr. Robert Stutts, Brick Township Board of Education
Mr. Keith Schuck, Foreman on job

P.S..Job will commence on Thursday, October 15, 1987, as agreed upon between my partner Frank LoRusso and Mr. Stutts