BLOCK 1149 LOT 5 QUALIFICATION CODE C01-49 ADDRESS (SITE) LAUREL SQUARE S.C. 1930 ROUTE 88 PERMIT NO. 01-1071

CONSTRUCTION PERMIT APPLICATION

NEW JERSEY UNIFORM CONSTRUCTION CODE

Application Completes: Sections I, II, III (optional), IV, VI, and VII

I. IDENTIFICATION

STORE #10 1930 ROUTE 88

1. Propsed Work Site at: LAUREL SQUARE S.C.
2. Name of Owner in Fee: NEW PLAN EXCEL REALTY TRUST, INC. Tel. (845) 623-4950
   Address 19 NORTH MIDDLETOWN ROAD, NANUET, NEW YORK 10954 (street / municipality / zip code)
3. Ownership in Fee: Public ____ Private ✓
4. Principal Contractor: RELIANCE CONSTRUCTION Tel. (609) 823-0800
   Address 6703 ATLANTIC AVENUE VENTNOR, NJ 08406
   License No. OR, if new home, Builder Reg. No. ____ Exp. Date ____
   Federal Employee No. 22-3328816 FAX: (609) 487-1242
5. Architect or Engineer AES, LLC Tel. (410) 543-4595
   Address 110 WEST CHURCH STREET, SALISBURY, MD. 21801
6. Responsible Person in Charge of Work DANIEL SMITH
   Tel. (609) 823-0800 FAX (609) 48[illegible]

Tenant Fit up

RECEIVED MAR 20 2001

V. FEE SUMMARY (for office use only)

			Update	Update
1. Building	$	125		
2. Electrical		45		
3. Plumbing		60		
4. Fire Protection		35		
5. Elevator Devices				
6. Subtotal	$			
7. Less 20% for State Plan Review				
8. Subtotal	$			
9. DCA Training Fee		9		
10. Subtotal				
11. Cert. of Occupancy				
12. Other		30		
13. TOTAL	$	314		

VI. BUILDING/SITE CHARACTERISTICS

			(office use only)
1. Number of Stories	ONE		
2. Height of Structure	20	ft.	
3. Area — Largest Floor	2240	sq. ft.	
4. New Building Area	0	sq. ft.	
5. Volume of New Structure		cu. ft.	
6. Construction Classification	2C		
7. Total Land Area Disturbed	0	sq. ft.	
8. Flood Hazard Zone			
9. Base Flood Elevation		ft.	
10. Wetlands yes			
no			
11. Max. Live Load			
12. Max. Occupancy Load			

II. PROPOSED WORK

OPTIONAL (for office use only)

	Est. Cost	Plans Rec'd by	Date Rec'd	Rejection Date	Approval Date	Re-viewer	Resubmission Dates Approval	Rejection	Re-viewer
1. ☑ Minor Work	3000								
2. ☐ New Building									
3. ☐ Addition									
4. ☑ Alteration	2000								
5. ☑ Fire Protection	500						5/5/01		DK
6. ☑ Plumbing	3,000				4-19-01				
7. ☑ Electrical	3,500				4-4-01				
8. ☐ Elevator Devices									
9. ☐ Asbestos Abat. Subch. 8									
10. ☐ Lead Hazard Abatement									
11. ☑ Demolition	2,000	EWC	3/23/01		3/23/01				
TOTAL COSTS	14,000								

Called 4/19/01

COMMERCIAL

III. DO YOU WANT: (optional)

1. ☐ Partial Releases
2. ☐ Prototype Processing

IV. DOES OR WILL YOUR BUILDING CONTAIN ANY OF THE FOLLOWING?

1. ☐ Elevators/Escalators/Lifts/ Dumbwaiters/Moving Walks
2. ☐ High Pressure Boilers
3. ☐ Pressure Vessels
4. ☐ Refrigeration Systems
5. ☐ Cross-Connections/Backflow Preventers
6. ☐ Hazardous Uses/Places of Assembly
7. ☐ Sprinklers
8. ☐ Smoke Control Systems in Open Wells
9. ☐ Underground Storage Tanks

VII. DESCRIPTION OF BUILDING USE

A. RESIDENTIAL

1. ☐ Hotels (R-1)
   Multi-Family (R-2)
   Two-Family (R-3) BOCA
   Two-Family (R-4) CABO
   One-Family (R-3) BOCA
   One-Family (R-4) CABO
   No. of dwelling units:
   Before Construction
   After Construction
   Net Gain or Loss

B. NON-RESIDENTIAL

1. State Specific Use: COHEN'S DELI Restaurant
2. Use Group: M
3. Change in Use Group, Indicate Former:

IMPORTANT A.H.B.T. MANDATORY FEE - COMMERCIAL

TOWNSHIP OF BRICK
401 CHAMBERS BRIDGE RD
DIVISION OF INSPECTIONS

UCC NEW JERSEY
FIRE PROTECTION
SUBCODE
TECHNICAL SECTION

COMMERCIAL

Date Received 03/20/2001
Date Issued 4/20/01
Control # C21-49
Permit # 01-1071

A. IDENTIFICATION-APPLICANT: COMPLETE ALL APPLICABLE INFORMATION. WHEN CHANGING CONTRACTORS, NOTIFY THIS OFFICE. CALL UTILITY DIG NO: 1-800-272-1000

Block 1149 Lot 5 Qual
Work Site Location 1930 ROUTE 88 UNIT #10
~~TENANT FIT UP~~ Vanilla Shell
Owner in Fee NEW PLAN EXCEL REALTY TRUST
Address 19 NORTH MIDDLETOWN RD
NANUET, NY 10954-
Tele.(609)927-1926 Fax ( )
Contractor BIDDLE ELECTRIC INC
Address 206 IOWA AVE
EGG HARBOR TWP, NJ 08234-
Tele.(609)927-1926
Lic. No. or Bldrs. Reg. No. New
Federal Emp. No. 22-3050483 Quinens 5535

B. FIRE PROTECTION CHARACTERISTICS

Use Group Present B Proposed B
Constr Class Present Proposed
Heating Systems [ ] New [ ] Existing [ ] HVAC
Type: [ ] Gas [ ] Oil [ ] Elect [ ] Solar
[ ] Other
Location:
Total Est Cost of Fire Prot Work $ 100

Fire Alarm System
New [ ] Existing [ ]
Location of Panel:
Fire Suppression/Standpipe Sys
New [ ] Existing [ ]
Location of Main Control Valve

JOB SUMMARY (Office Use Only)

PLAN REVIEW
[ ] No Plans Required
Joint Plan Review Required:
[ ] Bldg [ ] Elect
[ ] Plumb [ ] Elevator
[ ] Fire Plans Approved
Date: 4-6-01
Approved By:
SUBCODE APPROVAL
[ ] CO [ ] CCO [ ] CA
Date: 5504
Approved By:

Vanilla Shell Only

INSPECTIONS Type	Dates (Month/Day) Failure	Failure	Approval	Initial
Alarm Sys				
Suppr Test				
Standpipe				
Fire Pump				
PreEng Sys				
Mechanical				
Smoke Ctl				
TCO				
Final			5504	DB
Other				

C. CERTIFICATION IN LIEU OF OATH
I hereby certify that I am the (agent of) owner of record and am authorized to make this application.
Signature

D. TECHNICAL SITE DATA

Old Cohens deli

Description of Work:
Water Supply Source
Method of Alarm/Suppr Sys Superv

Storage Tanks	NUMBER	FEE (Office Use Only)
Type: [ ] Flammable Liquid [ ] Combust Liquid		
[ ] LPG [ ] LNG Capacity 0 Fuel		
Alarm Systems [ ] 110v Interconnected		
[ ] System		
Alarm Devices(smoke,heat,pulls,water/flow)	0	
Supervisory Devices (tampers,low/high air)	0	
Signalling Devices (horn/strobes, bells)	0	
Other Devices	0	
TOTAL	0	0
Suppression Systems		
Fire Pump 0 GPM Type	0	
Dry Pipe/Alarm Valves	0	
Pre-action Valves	0	
Sprinkler Heads (Dry and Wet)	0	0
Standpipes	0	0
Pre-Engineered Systems		
Wet Chemical	0	0
Dry Chemical	0	0
CO2 Suppression	0	0
Foam Suppression	0	0
Halon Suppression	0	0
Other		0
Kitchen Hood Exhaust System	0	0
Smoke Control System	0	0
Gas [ ] or Oil [ ] Fired Appliances	0	0
Other EMER/EXIT LITES		35
Other		0

must apply for tenant fit up permit.

Administrative Surcharge	$	0
Minimum Fee	$	0
TOTAL FEE	$	35
DCA Training Fee	$	0

Paid [ ] Check # Minimum Fee
Collected by: TOTAL FEE

U.C.C. F140 (rev. 3/96)

TOWNSHIP OF BRICK
401 CHAMBERS BRIDGE RD
DIVISION OF INSPECTIONS

UCC NEW JERSEY
PLUMBING
SUBCODE
TECHNICAL SECTION

Date Received 03/20/2001
Date Issued 4/20/01
Control # C21-49
Permit # 01-1071

A. IDENTIFICATION-APPLICANT: COMPLETE ALL APPLICABLE INFORMATION. WHEN CHANGING CONTRACTORS, NOTIFY THIS OFFICE. CALL UTILITY DIG NO: 1-800-272-1000

Block 1149 Lot 5 Qual

Work Site Location 1930 ROUTE 88 UNIT #10
TENANT FIT UP

Owner in Fee NEW PLAN EXCEL REALTY TRUST
Address 19 NORTH MIDDLETOWN RD
NANUET, NY 10954-
Tele. (732)495-3726 Fax ( )
Contractor ANTHONYS ROYAL FLUSH PLUMBING
Address 42 LINCOLN CT
KEANSBURG, NJ
Tele. (732)495-3726
Lic. No. or Bldrs Reg. No. 0943
Federal Emp. No. [redacted]

Old comm. left

COMMERCIAL

B. PLUMBING CHARACTERISTICS

Use Group Present B Proposed B
Building Sewer Size [ ] Public Sewer [ ] Private Septic
Water Sewer Size [ ] Public Water [ ] Private Well
Estimated Cost of Plumbing Work $ 3,000

JOB SUMMARY (Office Use Only)

PLAN REVIEW
[ ] No Plans Required
Joint Plan Review Required:
[ ] Bldg [ ] Elect
[ ] Fire [ ] Elevator
[ ] Plumb. Plans Approved
Date: 4/19/01
Approved By:

SUBCODE APPROVAL
[ ] CO [ ] CCO [ ] CA
Approved By:
Date:

INSPECTIONS Type	Dates (Month/Day) Failure	Failure	Approval	Initial
Slab	4-27-01		5-1-01	DW
Rough			5-1-01	DW
Water				
Sewer				
Fixtures	5-1-01			
Gas Equip.				
Gas Piping				
Solar				
TCO				

C. CERTIFICATION IN LIEU OF OATH

I hereby certify that I am the (agent of) owner of record and am authorized to make this application and perform the work listed on this application.

Signature/Contractor Seal
[ ] Licensed Plumbing Contractor [ ] Exempt Applicant

D. TECHNICAL SITE DATA (List all fixtures.)

NO.	FIXTURE/EQUIPMENT	FEE (Office Use Only)
2	Water Closet	20
0	Urinal / Bidet	0
0	Bath Tub	0
2	Lavatory	20
0	Shower	0
2	Floor Drain	0
[redacted]	Sink	0
0	Dishwasher	0
0	Drinking Fountain	0
0	Washing Machine	0
0	Hose Bib	0
0	Water Heater	0
0	Fuel Oil Piping	0
0	Gas Piping	0
0	Steam Boiler	0
0	Hot Water Boiler	0
0	Sewer Pump	0
0	Interceptor / Separator	0
0	Backflow Preventer	0
0	Greasetrap	0
0	Sewer Connection	0
0	Water Service Connection	0
0	Stacks	0
	Other	0
	Other	0

Inspection complete 04-19-01 DOB

Administrative Surcharge	$	0
Minimum Fee	$	0
TOTAL FEE	$	~~40~~ 60
DCA Training Fee	$	2

Paid [ ] Check # Minimum Fee
Collected by: TOTAL FEE

2 inspection required of all old drains & vents that are capped off.

U.C.C. F130 (rev. 3/96)

4-27-01 - Not Ready

6-1-01 ① LAVS not BARRIER free
② NO Hot WATER

TOWNSHIP OF BRICK
401 CHAMBERS BRIDGE RD
DIVISION OF INSPECTIONS

Date Issued 04/20/2001
Control #
Permit # 01-1071

UCC NEW JERSEY
CONSTRUCTION PERMITE

IDENTIFICATION Block 1142 Lot 5 Qual

Work Site Location 1230 ROUTE 88 UNIT #10
TENANT FIX UP
Owner in Fee NEW PLAN EXCEL REALTY TRUST
Address 10 NORTH MIDDLETOWN RD
NANUET, NY 10954-
Telephone (845)623-4950

Contractor RELIANCE CONSTRUCTION
Address 6702 ATLANTIC AVE
VENTNOR, NJ 08406-
Telephone (609)823-0899
Lic. No. or Bldrs. Reg. No.
Federal Exp. No. 22-3328816

04/20/01 12:42PM 0000004023
#002 SEQ.002

Is hereby granted permission to perform the following work:

[X] BUILDING [X] PLUMBING [ ] LEAD HAZARD ABATEMENT
[X] ELECTRICAL [X] FIRE PROTECTION [ ] DEMOLITION
[ ] ELEVATOR DEVICES [ ] ASBESTOS ABATEMENT [ ] OTHER
(Subchapter 8 only)

DESCRIPTION OF WORK:
TENANT FIX UP FOR UNIT #10
RELOCATE MENS & WOMENS BATHROOM; INSTALL TWO H/C BATHROOMS

NOTE: If construction does not commence within one (1) year of date of issuance, or if construction ceases for a period of six (6) months, this permit is void.

Estimated Cost of Work $ 11,600

Construction Official 04/20/2001
Date

U.C.C. F110 (rev. 3/96)

PAYMENTS (Office Use Only)

Building	135
Electrical	45
Plumbing	60
Fire Protection	35
Elevator Devices	0
Other	
DCA Training Fee	9
Cert. of Occupancy	0
Other ZPA	30
Total	284 — 314
Check No.	1462
Cash	
Collected By	MJR

#1071	
BUILDING	$135.00
ELECTRIC	$45.00
PLUMBING	$60.00
FIRE	$35.00
DCA	$9.00
ZPA	$15.00
EPA	$15.00
CHECK	$314.00

TOWNSHIP OF BRICK
401 CHAMBERS BRIDGE RD
DIVISION OF INSPECTIONS

UCC NEW JERSEY
BUILDING
SUBCODE
TECHNICAL SECTION

Date Received 03/20/2001
Date Issued 4/20/01
Control # C21-49
Permit # 01071

A. IDENTIFICATION-APPLICANT: COMPLETE ALL APPLICABLE INFORMATION. WHEN CHANGING CONTRACTORS NOTIFY THIS OFFICE. CALL BEFORE YOU DIG NJ: 1-800-272-1000

Block 1216 Lot 5 Qual

Prem Site Location: 1516 ROUTE 35 UNIT 110
TOMS RIVER NJ

Owner or Lessee: NEW PLAN EXCEL REALTY TRUST

Address: 10 MAUTE WOODLAND RD
BOONTON NJ 07005

Phone: (973)334-3300

Contractor: BRIANCE CONSTRUCTION

Address: 6201 ATLANTIC AVE
EGGPORT NJ 08406

Phone: (609)487-0808 Fax (609)487-1242

Lic. No. of Bldrs. Reg. No.

Federal Tax ID # 22-3270401

UCC CONTACT (Office Use Only)

Final Approval	Date	Initial
Do Final Bldg		
X Elec	4/30/01	
[ ] Plumbing		
[ ] Mechanical		
[ ] Fire		
[ ] Other		

Other Fire Office Required:
[ ] Local [ ] Final [ ] Fire

SUBCODE SIGNOFF: [ ] Fire
[ ] CP [ ] PCO [ ] PA

Date

Approved By:

INSPECTIONS Type	Dates (Month/Day) Failure	Failure	Approval	Initial
Footing				
Foundation				
Slab				
Frame				
Barrier-Free				
Insulation				
Clearance				
Energy				
Mechanical				
PCO				
Other				
Final				
Barrier-Free				

B. BUILDING CHARACTERISTICS

Use Group: Existing $ Proposed $

Owners Cost: Existing Proposed

No. of Stories $

Height of Structure ft.

Area Largest Floor ft sq. ft.

Gross Bldg. Area All Floors ft sq. ft.

Internal Volume Structure: ft cu. ft.

Total Land Area Disturbed: ft sq. ft.

Est. Cost of Bldg. Work:
1. New Bldg. $
2. Alterations $ 5,000
3. Total (1+2+3) $ 5,000

Industrialized Building:
[ ] State Approved
[ ] HUD

C. CERTIFICATION IN LIEU OF OATH

I hereby certify that I am the lessee of; owner of record and am authorized to make this application.

Signature

D. TECHNICAL SITE DATA
DESCRIPTION OF WORK

old office

TENANT FIT UP FOR UNIT 110
RELOCATE MENS & WOMENS BATHROOM: INSTALL TWO H.C BATHROOMS

No Other work must meet ADA codes For Bathrooms

TYPE of WORK: Any Further work Needs Permit First

	FEE (Office Use Only)
[ ] New Building	$
[ ] Addition	$
[X] Alteration	135
[ ] Roofing	$
[ ] Siding	$
[ ] Fence $ Height (exceeds 6')	$
[ ] Sign $ Sq. Ft	$
[ ] Pool	$
[ ] Asbestos Abatement Subchapter 8	$
[ ] Lead Haz. Abatement NJAC 5:17	$
[ ] Other	$
Other	$
[ ] Demolition	$

	Administrative Surcharge	$
Check #	Minimum Fee	$
Collected By:	TOPSI FEE	$ 135
	DCA Training Fee	$

U.C.C. FIR (rev. 5/96)

TOWNSHIP OF BRICK
401 CHAMBERS BRIDGE RD
DIVISION OF INSPECTIONS

UCC NEW JERSEY
ELECTRICAL
SUBCODE
TECHNICAL SECTION

Date Received 03/20/2001
Date Issued 4/20/01
Control # C21-49
Permit # 01-1071

A. IDENTIFICATION-APPLICANT: COMPLETE ALL APPLICABLE INFORMATION. WHEN CHANGING CONTRACTORS NOTIFY THIS OFFICE. CALL UTILITY DIG NO: 1-800-272-1000

Block 1149 Lot 1 Qual
Work Site Location 1210 ROUTE 88 UNIT #10
TOWN: FIT UP
Owner in fee BLUE LAB EXCEL REALTY TRUST
Address: 15 NORTH MIDDLETOWN RD
MARLBORO, NJ 07751-
Tele. (732)927-1326 Fax ( )
Contractor BIGGLE ELECTRIC INC
Address 206 IOWA AVE
LOG ANROOK TWP, NJ 08216-
Tele. (609)927-1365
Lic. No. or Bldrs. Reg No. 8548
Federal Emp. No. 22-3504162

B. ELECTRICAL CHARACTERISTICS

Use Group - Present B Proposed B
[ ] Paid/Per # [ ] Temporary [ ] Other
Building Occupied as Utility Co.
Estimated Cost of Electrical Work $ 1,500

JOB SUMMARY (Office Use Only)

PLAN REVIEW
[ ] No Plans Required
Joint Plan Review Requested:
[ ] Bldg [ ] Plumb
[ ] Fire [ ] Elevator
[ ] Elect Plans Approved
Date:
Approved By:

INSPECTIONS — Dates (Month/Day)

Type	Failure	Failure	Approval	Initial
Rough				
Temp Serv				
Const Serv				
TCO				
Other				
Service				
Final				

Temp. Cut-in-Card Date Issued
Final Cut-in-Card Date Issued

MUNICIPAL APPROVAL
[ ] CO [ ] TCO [ ] CA
Date:
Approved By:

C. CERTIFICATION IN LIEU OF OATH

I hereby certify that I am the agent of owner of record and am authorized to make this application and perform the work listed on this application.

Applicant's Signature/Contractor's Seal and Signature
[ ] Licensed Electrical Contractor [ ] Exempt Applicant

D. TECHNICAL SITE DATA

NO.	SIZE	ITEM	TBR (Office Use Only)
34		Lighting Fixtures	
3		Receptacles	
6		Switches	
0		Detectors	
0		Light Poles	
0		Motors-Fract HP	
4		Emergency & Exit Lights	
0		Communications Points	
0		Alarm Devices/T.A.C. Panel	
52		TOTAL NUMBERS	15
0		Pool Permit/with UW Lights	0
0		Portable Pool/Spa/Hot Tub	0
0	0	KW Elect Range/Receptacle	0
0	0	KW Oven/Surface Unit	0
0	0	KW Elect Water Heater	0
0	0	KW Elect Dryer/Receptacle	0
0	0	KW Dishwasher	0
0	0	HP Garbage Disposal	0
0	0	KW Central A/C Unit	0
0	0	HP/KW Space Heater/Air Handler	0
0	0	Baseboard Heat	0
0	0	HP Motors 1/4 HP	0
0	0	KW Transformer/Generator	0
0	0	AMP Service	0
0	0	AMP Subpanels	0
0	0	AMP Motor Control Center	0
0	0	KW Elect Sign/Outline Light	0
		Other	0
		Other	0

Variation: Wall only
Not to exceed 1 [illegible]
additional permit for additional work

Administrative Surcharge $ 0
Minimum Fee $ 0
TOTAL FEE $ 15
DCA Training Fee $ 3

Paid [ ] Check #
Collected by:

B.C.C. F120 (rev. 3/96)

TOWNSHIP OF BRICK

OCEAN COUNTY, NEW JERSEY
401 CHAMBERS BRIDGE ROAD, BRICK, N.J. 08723
(732) 262-1050

Department of Administration & Finance

Office of Municipal Engineer
(732) 262-1038
Fax: (732) 262-8954
www.twp.brick.nj.us

Date: 3/20/01

Block: 1149 Lot: 5

Property Address: LAUREL SQUARE S.C. 1930 ROUTE 88

I, DANIEL J. SMITH (name) of 6703 ATLANTIC AVENUE (address) VENTNOR NJ 08406 request to be exempt from the plot plan requirement for an addition, fence, shed, deck, pool, retaining wall, ect. as outlined in Chapter 190.31 if the Codified Ordinance of the Township of Brick.

Daniel J. Smith
Applicant's Signature

The following shall be submitted with this request:

1. Submit surveys locating existing dwelling and proposed addition. Dimensions of the addition should be included.

2. Proof that the property is not located in a Flood Hazard Area.

Note: Prior to approval a site inspection by the Engineering Department will be performed to verify that the proposed addition will not create a drainage problem.

COMMERCIAL

FOR OFFICE USE ONLY

Approved on: 3/23/01 Signed: [signature]

Rejected on: _____ Signed: _____

Comments:

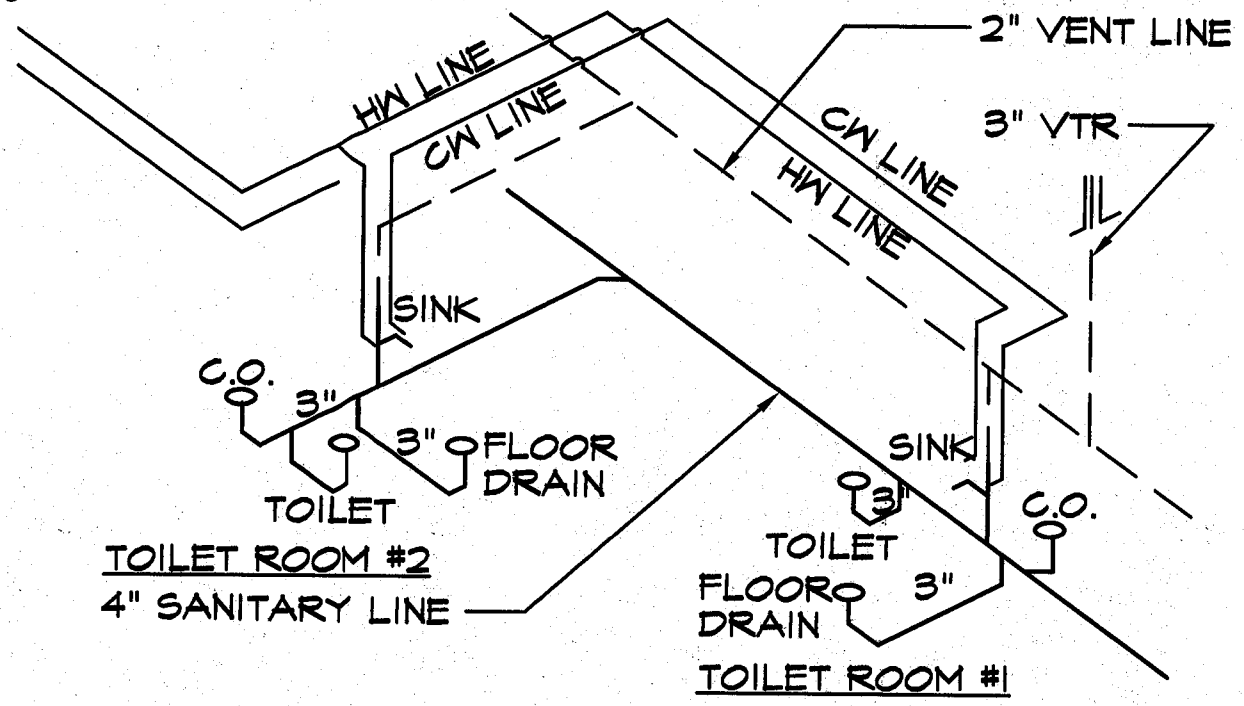

PLUMBING RISER DIAGRAM FOR TOILET ROOMS

NOTE:

1. PLUMBING CONTRACTOR TO COORDINATE CONNECTION OF NEW PLUMBING LINES TO EXISTING LINES AND PROVIDE 'Ys' FOR APPROPRIATE FLOW DIRECTION.
2. PLUMBING CONTRACTOR TO COORDINATE CONNECTION OF NEW HOT AND COLD WATER LINES TO EXISTING LINES.

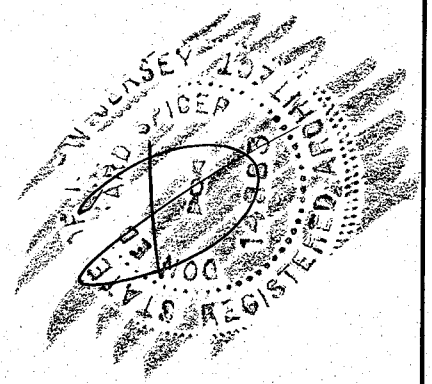

Dwg. No.: P1.0	Revisions:	Project No.: 01015	Drawn By: DCS
Scale: NO SCALE	Date: 4-10-01		

PLUMBING RISER DIAGRAM
NEW PLAN EXCEL REALTY TRUST
BRICKTOWN, NEW JERSEY

A·ES Architectural/Engineering Services, LLC
110 West Church Street Salisbury, MD 21801
Phone: (410) 543-4595 Fax: (410) 543-4898
Don E. Spicer AIA, James S. McDonald AIA, Thomas D. Plotts PE

Certificate: I hereby certify that these documents were prepared or approved by me, and that I am a duly licensed Architect under the laws of the State of Delaware. License number _____ Expiration date _____

MOEN®

Illustrated Parts

■ Order by Part Name and
Part Number (Bold Face Type)

SANI-STREAM®
Two-Handle Lavatory Faucet

MODEL	HANDLE TYPE	FINISH
8800	4" Wrist Blade	Chrome
8810	4" Wrist Blade	Chrome w/Grid Waste Assembly
8820	4" Wrist Blade	Chrome w/Pop-Up Waste Assembly

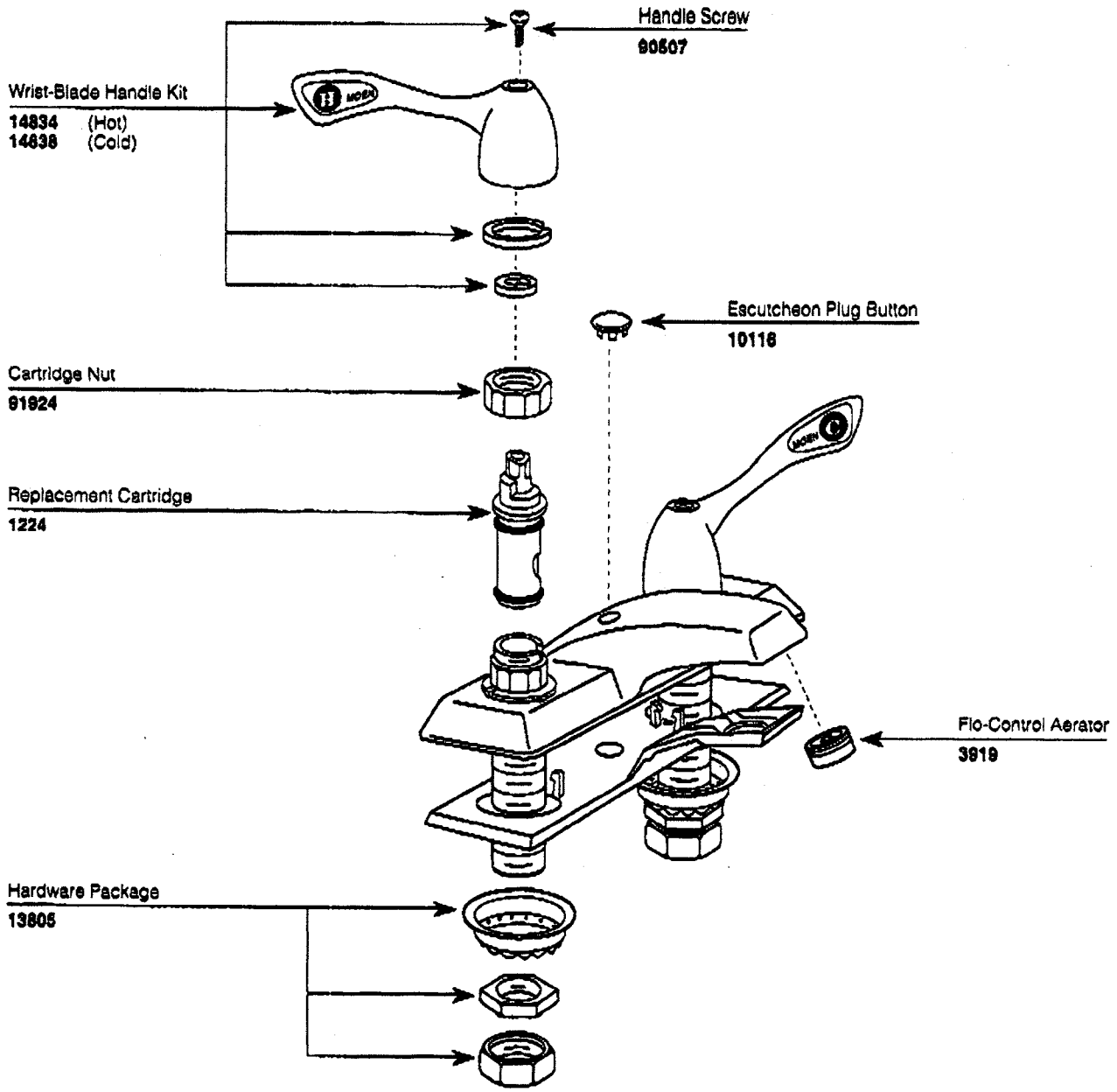

MOEN®

Specifications

FAUCET DESCRIPTION

- Chrome plated metal construction
- Copper or brass waterways
- 1/2" IPS connections
- Supplied with vandal resistant screws

OPERATION

- 4" Wrist Blade style handles with hot and cold color indicators
- Hot side counterclockwise (1/4) turn to open (clockwise to close)
- Cold side clockwise (1/4) turn to open (counter-clockwise to close)

FLOW

- 2.0 MAX. gpm aerator

CARTRIDGE

- 1224 cartridge design
- Nonmetallic and stainless steel material

STANDARDS

- Third party certified by IAPMO and CSA to meet ASME A112.18.1M and all applicable specifications referenced therein and complies with the requirements of ANSI A117.1

WARRANTY

- Warranted for one year against material or manufacturing defects

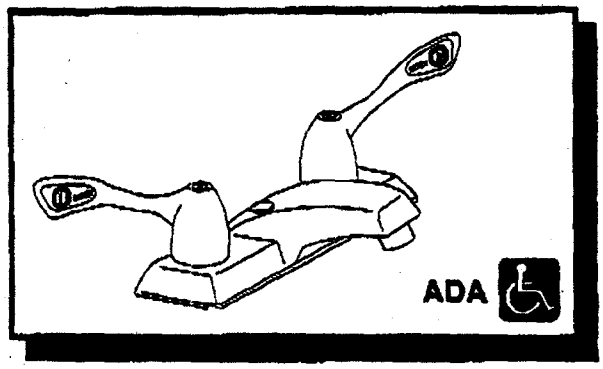

SANI-STREAM®
Two-Handle Lavatory Faucet

Model 8800

NOTE: See reverse side for illustrated parts

NOTE: DESIGNED TO INSTALL THROUGH 2-1" MIN. DIA. HOLES. 4" ON CENTER

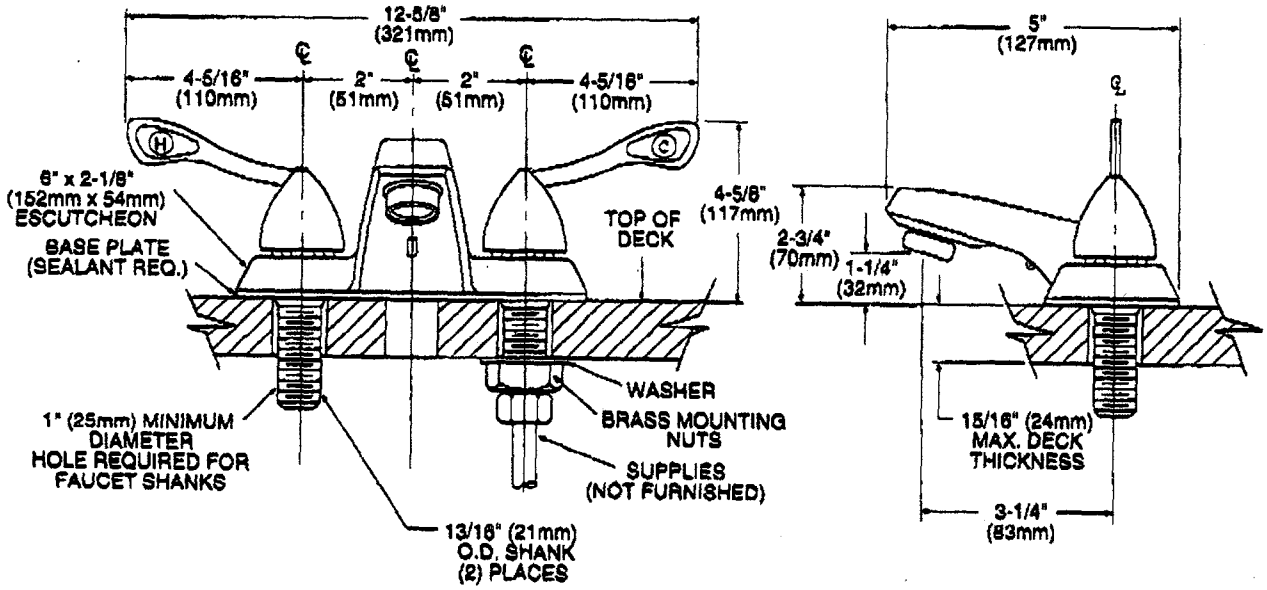

FRONT VIEW **SIDE VIEW**

CRITICAL DIMENSIONS

(DO NOT SCALE)

American Standard

DECLYN™ WALL-HUNG LAVATORY

VITREOUS CHINA

DECLYN WALL-HUNG LAVATORY

- Vitreous china
- Rear overflow
- Soap depression
- Faucet ledge.
  Shown with 2000.101 Ceramix faucet (not included)

☐ **0321.026** With wall hanger (illustrated)
Faucet holes on 102mm (4") centers

☐ **0321.075** For concealed arms support
Faucet holes on 102mm (4") centers

Nominal Dimensions:
483 x 432mm
(19" x 17")

Bowl sizes:
362mm (14-1/4") wide,
273mm (10-3/4") front to back,
152mm (6") deep

Fixture Dimensions conform to ANSI Standard A112.19.2

To Be Specified

- ☐ Color:
- ☐ Faucet*:
- ☐ Faucet Finish:
- ☐ Supplies:
- ☐ 1-1/4" Trap:
- ☐ Nipple:
- ☐ Concealed Arms Support (by others):

* See faucet section for additional models available

● Top of front rim mounted 864mm (34") from finished floor.
MEETS THE AMERICAN DISABILITIES ACT GUIDELINES AND ANSI A117.1 REQUIREMENTS FOR PEOPLE WITH DISABILITIES

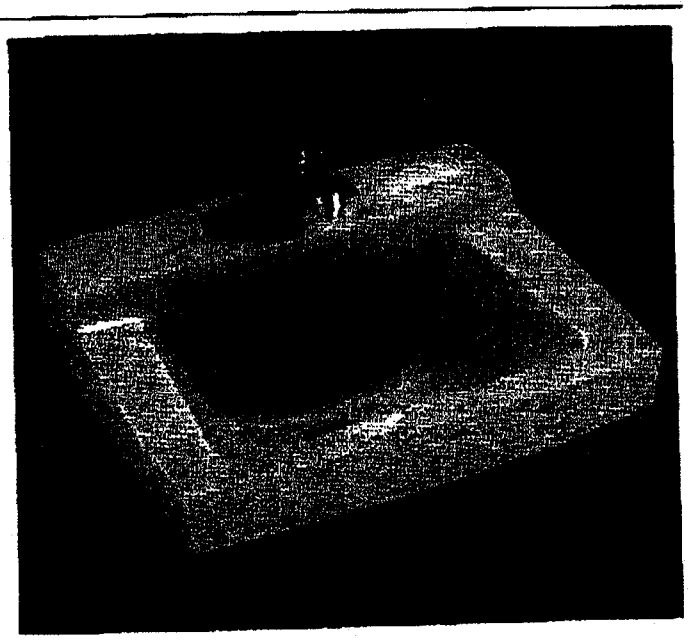

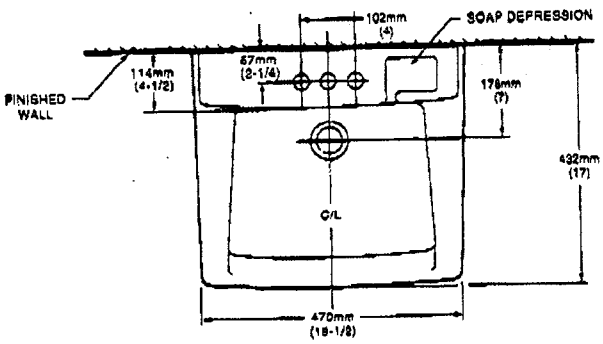

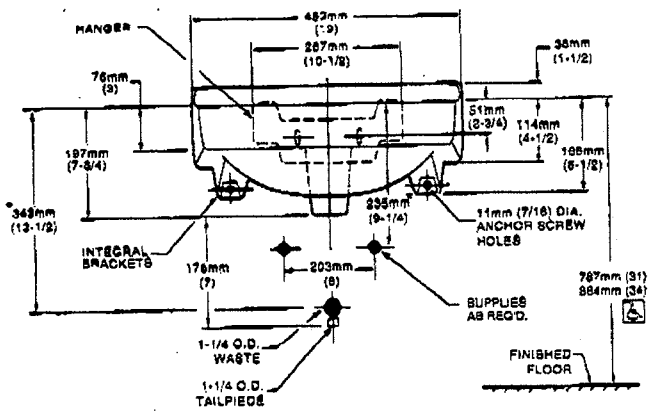

NOTES:
* DIMENSIONS SHOWN FOR LOCATION OF SUPPLIES AND "P" TRAP ARE SUGGESTED.
PROVIDE SUITABLE REINFORCEMENT FOR ALL WALL SUPPORTS.
FITTINGS NOT INCLUDED AND MUST BE ORDERED SEPARATELY.
IMPORTANT: Dimensions of fixtures are nominal and may vary within the range of tolerances established by ANSI Standard A112.19.2.
These measurements are subject to change or cancellation. No responsibility is assumed for use of superseded or voided pages.

SPS 0321

American Standard

BARRIER FREE

CADET™ 17"H ELONGATED PRESSURE-ASSISTED TOILET

VITREOUS CHINA

CADET™ 17"H ELONGATED PRESSURE-ASSISTED TOILET

2168.100
- Vitreous china
- Low-consumption (6.0 Lpf/1.6 gpf)
- 17" rim height
- Elongated bowl
- Pressure-assisted siphon jet flush action
- Close-coupled flushometer tank*
- Side-mounted chrome trip lever
- Speed Connect™ tank/bowl coupling system
- 2 bolt caps
- Fully-glazed trapway
- 100% factory flush tested

❑ **3042.109** Bowl

❑ **4086.100** Tank

❑ **2168.175** with Slotted Rim for Bedpan holding

❑ **3042.132** Bowl

❑ **4086.100** Tank

Nominal Dimensions:
813 x 518 x 772mm
(32" x 20-3/8" x 30-3/8")

Fixture only, seat and supply by others

Compliance Certifications - Meets or Exceeds the Following Specifications:
- ASME A112.19.2M (and 19.6M) for Vitreous China Fixtures - Includes Flush Performance, Ball Pass Diameter, Trap Seal Depth and all Dimensions

Recommended working pressure range
20 psi - 80 psi

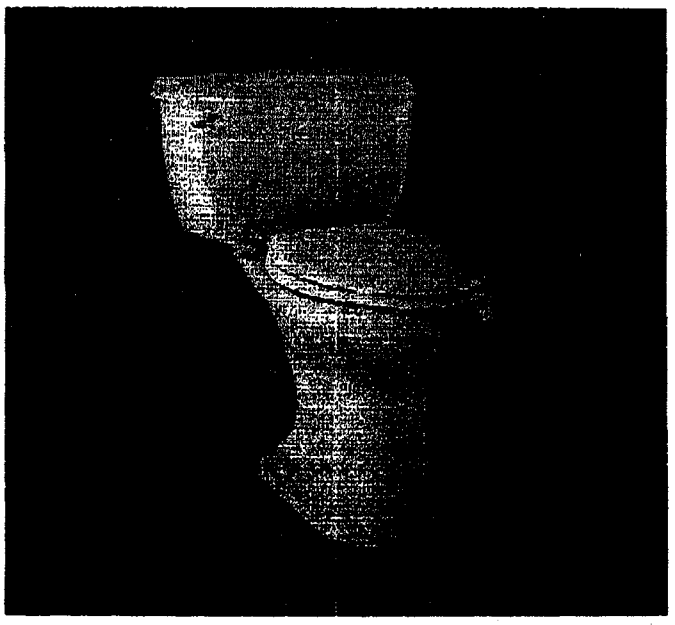

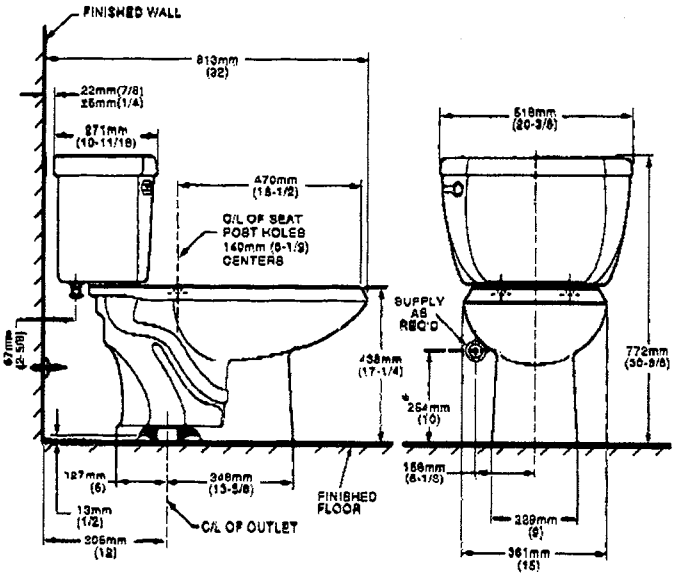

To Be Specified
- ❑ Color:
- ❑ Seat: American Standard #5324.019 "Rise and Shine" (with easy to clean lift-off hinge system) solid plastic closed front seat with cover. See page TB-001.
- ❑ Seat: American Standard #5311.012 "Laurel" molded closed front seat with cover. See page TB-001.
- ❑ Alternate Seat:
- ❑ Supply with stop:

* Flushometer tank system by Flushmate® Div. of Sloan Valve Co.

NOTES:
THIS TOILET IS DESIGNED TO ROUGH-IN AT A MINIMUM DIMENSION OF 305MM (12") FROM FINISHED WALL TO C/L OF OUTLET.
SUPPLY NOT INCLUDED WITH FIXTURE AND MUST BE ORDERED SEPARATELY.
* DIMENSIONS SHOWN FOR LOCATION OF SUPPLY IS SUGGESTED.
FOR ADDITIONAL INFORMATION REFER TO INSTALLATION INSTRUCTIONS SUPPLIED.
IMPORTANT: Dimensions of fixtures are nominal and may vary within the range of tolerances established by ANSI Standard A112.19.2.
These measurements are subject to change or cancellation. No responsibility is assumed for use of superseded or voided pages.

When installed so top of seat is 432 to 483mm (17" to 19") from the finished floor.
MEETS THE AMERICAN DISABILITIES ACT GUIDELINES AND ANSI A117.1 REQUIREMENTS FOR ACCESSIBLE AND USEABLE BUILDING FACILITIES-CHECK LOCAL CODES.

RELIANCE CONSTRUCTION MANAGEMENT
222 FIRST AVENUE
ESTELL MANOR, NJ 08319

4618

OCEAN CITY HOME BANK
OCEAN CITY, N. J. 08226
55-7108-2312

4442

4-3-01

PAY TO THE ORDER OF TOWNSHIP OF BRICK $ 62.50

SIXTY TWO & 50/00 DOLLARS

Security features included. Details on back.

MEMO 1930 HIGHWAY 88
COHEN'S DELI, LAUREL SQ.

[redacted]

From: Carol A. Wolfe, Affordable Housing Administrator
Re: Affordable Housing Fees

Business/Development: Vacant / formerly Cohens Deli
Owner/Applicant: Reliance Const. Mgmt
Property Address: 1930 Rt. 88
Block: 1149 Lot: 5

DEPOSIT RECEIVED
Mandatory Development Fee
Commercial
Residential
Inclusionary Development Fee

DATE: 4/3/01

Check Number 4442
Estimated Fee 125.00
Preliminary Fee Deposit 62.50
Final Fee
Less Preliminary Fee
Final Fee Deposit

FOR DEPOSIT ONLY - AFFORDABLE HOUSING TRUST ACCOUNT 36 367087

Collection of said fees as authorized by Township Ordinance 354-2C-93, is pursuant to N.J.S.A. 52:27D-301 et seq. And N.J.A.C. 5:92-18 et seq.

Received in Treasurer's Office by:

Signature

Date 4/3/01

OFFICE OF AFFORDABLE HOUSING

AHBT PRELIMINARY APPROVAL

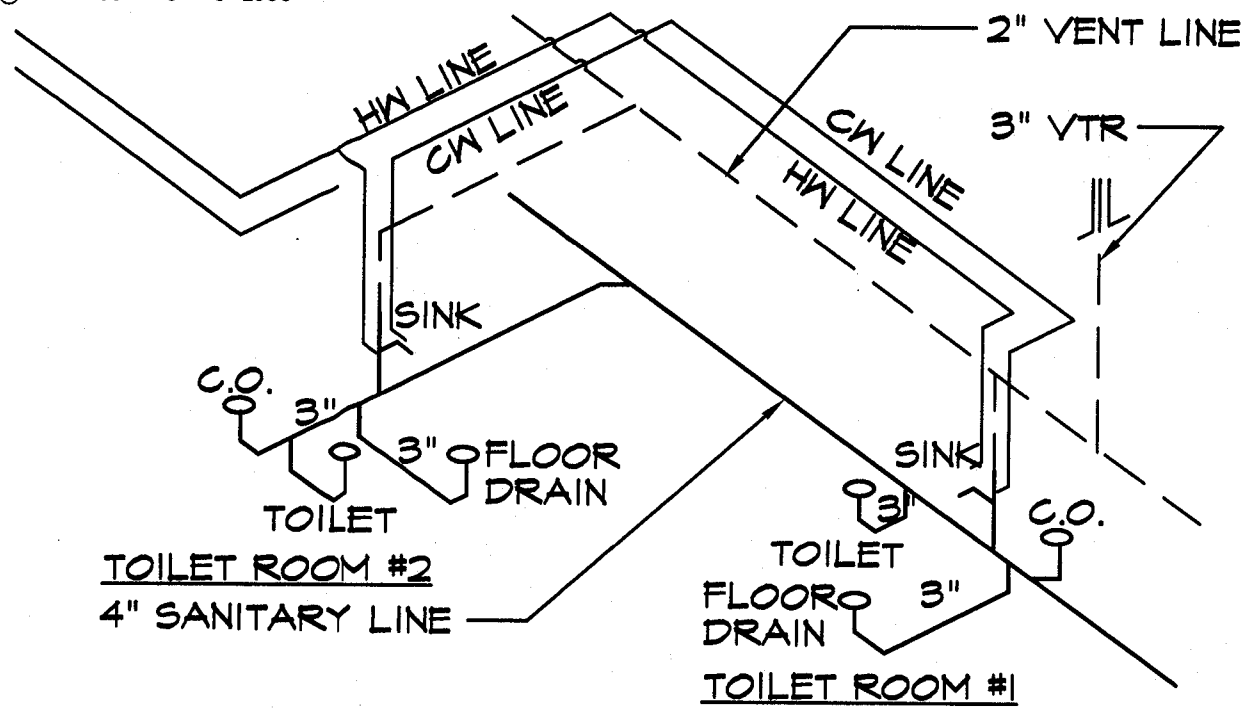

PLUMBING RISER DIAGRAM FOR TOILET ROOMS

NOTE:

1. PLUMBING CONTRACTOR TO COORDINATE CONNECTION OF NEW PLUMBING LINES TO EXISTING LINES AND PROVIDE 'Ys' FOR APPROPRIATE FLOW DIRECTION.

2. PLUMBING CONTRACTOR TO COORDINATE CONNECTION OF NEW HOT AND COLD WATER LINES TO EXISTING LINES.

Dwg. No.: P1.0	Date: 4-10-01	PLUMBING RISER DIAGRAM
	Scale: NO SCALE	NEW PLAN EXCEL REALTY TRUST
	Drawn By: DCS	BRICKTOWN, NEW JERSEY
	Project No.: 0101G	
	Revision:	

A·ES Architectural/Engineering Services, LLC
110 West Church Street Salisbury, MD 21801
Phone: (410) 543-4595 Fax: (410) 543-4898
Don E. Spicer AIA, James S. McDonald AIA, Thomas D. Plotts PE

TOWNSHIP OF BRICK
ZONING PERMIT

Approved: March 22, 2001 **No. 1.0282**

Block: 1149 **Lot:** 5 **Zone:** B-3, Highway Development

Property Address: 1930 Route 88, Laurel Square

Applicant: Daniel J. Smith

Property Owner: New Plan Excel Realty Trust, Inc.

Existing Use: Vacant retail unit (former Cohen's Deli).

Proposed Use: Vacant retail unit.

Proposed Construction: Interior alterations for "vanilla shell" to prepare for new tenant.

Conditions: An additional zoning permit is required prior to any tenant fit-up.

This permit shall be null, void and of no effect if any of the facts contained in the application upon the basis that this permit was granted are false or untrue in any material respect.
This permit shall expire one (1) year after the date of issuance if the use or substantial construction has not been commenced.

Michael P. Fowler, AICP/PP
Municipal Planner

Sean Kinnevy
Zoning Officer

RECEIVED
MAR 21 2001
ZONING

TOWNSHIP OF BRICK
Zoning Permit Application
(Please Type or Print Neatly)

Block 1149 Lot 5 Qualifer

PROPERTY ADDRESS LAUREL SQUARE S.C. 1930 ROUTE 88

PERSONAL NAME OF APPLICANT DANIEL J. SMITH

BUSINESS NAME OF APPLICANT RELIANCE CONSTRUCTION

PROPERTY OWNER NEW PLAN EXCEL REALTY TRUST, INC

PRESENT USE OF PROPERTY (check all that apply)

☐ Vacant Lot ☐ Single-family dwelling ☐ Multi-family dwelling
☑ Commercial (please describe) STRIP STORE IN SHOPPING CENTER FORMER COHEN'S DELI

PROPOSED USE OF PROPERTY (check all that apply)

☐ Vacant Lot ☐ Single-family dwelling ☐ Multi-dwelling
☑ Commercial (please decribe) READYING FOR TENANT WORK VANILLA SHELL TO TURN OVER TO TENANT

PROPOSED CONSTRUCTION (check all that apply)

☐ New Building (please describe)
☐ Addition
☑ Alteration
☐ Porch or deck (state heights)
☐ Shed (state height)
☐ Fence (state type & height)
☐ Swimming Pool ☐ in-ground ☐ above-ground
☐ Other (please describe)

CHECKLIST

☐ All information completed above
☑ Two (2) copies of a plot plan containing:
☑ All existing and proposed structures
☑ All dimensions of the lot and structures
☐ All setbacks from the structures to the property lines
☑ All adjacent streets and waterways
☐ If applicable, include a copy of the zoning Board of Adjustment Resolution, the date that the map was signed, and/or the date that the subdivision map was filed with the Ocean County Clerk, along with the file map and number.

COMMERCIAL

The applicant certifies that all statements and information made and provided as part of this application are true to the best of the applicant's knowledge, information and belief. The applicant further states that the applicant will comply with all other Municipal approvals and ordinances, and all County, State, and Federal Regulations.

Signature of applicant Date 3-20-01

Reviewed by Zoning Office SK Date 3-22-1 (✓) Approved ( ) Denied

Plumbing Subcode
Plan Review Record
Township of Brick

Date: 4-9-01

Site Address: 1930 Rt 88 store #10

Reviewed By: DW

CORRECTION LIST

No.	Description
1	NO DWV sketch
2	Flushometers ?, or flush-meter tanks
3	NO CAP offs for existing - old restaurant - must of had equipment that we want to make sure is capped

Resubmit 04/18/01

Party Called and Phone #: 823-0800 Daniel Smith Left message

Resubmitted on: _____ **By:** _____

TOWNSHIP OF BRICK

OCEAN COUNTY, NEW JERSEY
401 CHAMBERS BRIDGE ROAD, BRICK, N.J. 08723

Joseph C. Scarpelli, Mayor

Township Council:
- Helen Fayad – President
- Martin J. Anton
- Victor Cantillo
- Gregory S. Kavanagh
- Mary Lou Powner
- Kathy M. Russell
- Frederick J. Underwood, Sr.

Office of Affordable Housing
Carol A. Wolfe
Affordable Housing Administrator
(732) 262-1048

CASE # _____

APPROVAL DATE: _____
(Planning Board/BOA)

DATE: 8/29/01

TO: Frederick R. Millman, CTA
Tax Assessor

FROM: Carol A. Wolfe
Affordable Housing Administrator

RE: BLOCK 1149 LOT 5 SITE ADDRESS 1130 Rt. 88

TYPE OF SITE _____ TYPE OF BUSINESS _____
(Residential/Commercial)

APPLICANT [illegible] CITY & STATE [illegible], NJ. 08906

☒ Please review the attached application for an **estimated** assessed value for the proposed construction.

The **estimated** assessed value for the construction at the above referenced site is:

$ [illegible]

[signature]
Frederick R. Millman, CTA, Tax Assessor

9/29/01
Date

☐ Please review the attached application for a final assessed value for the construction at the above referenced site:

$ _____

_____
Frederick R. Millman, CTA, Tax Assessor

_____
Date

Affordable Housing-White Affordable Housing-Blue Engineering-Green Tax Assessor-Yellow Engineering-Pink Tax Assessor-Gold

RELIANCE CONSTRUCTION MANAGEMENT
6703 Atlantic Avenue
Ventnor, New Jersey 08406
Phone: (609) 823-0800
Fax: (609) 487-1242

April 16, 2001

Daniel Newman, Plumbing Inspector
Township of Brick Building Department
401 Chambers Bridge Road
Brick, New Jersey 08723

Re: Former Cohen's Deli
1930 Route 88
Block: 1149 Lot: 5

C21-49

HAND DELIVERED

Dear Mr. Newman:

Enclosed please find two (2) sealed copies of the plumbing rise diagram prepared by Architectural/Engineering Services, LLC, together with the specification sheets for the plumbing fixtures to be installed per the plan submitted.

In the event you have any questions please call.

Very truly yours,

DANIEL J. SMITH

CERTIFICATION IN LIEU OF OATH

I. OWNER SECTION (to be completed if the applicant is the owner in fee)

I hereby certify that I am the owner in fee of the property listed on Page 1.

Mark the following applicable boxes:

A. ( ) I further certify that a new home (private residence) will be constructed on this property for my own use and occupancy. This dwelling is to be occupied by myself and is not to be used for any purpose other than single family residential use. I attest that all construction, plumbing, or electrical work will be done, in whole or in part, by me or by subcontractors under my supervision, in accordance with all applicable laws; and, I further acknowledge that said new home is not covered under the New Home Warranty and Builders Registration Act (N.J.S.A. 46:3B-1 et seq.) and that such fact shall be disclosed to any person purchasing this property within ten years of the date of issuance of a certificate of occupancy.

I UNDERSTAND THAT IN MARKING BOX A, I ACKNOWLEDGE THAT I AM ASSUMING RESPONSIBILITY FOR THE WORK DONE ON SAID PROPERTY, THE CONDITION OF THE PROPERTY PRIOR TO, DURING, AND AFTER ANY WORK PERFORMED, AND FOR THE PERFORMANCE OF THE SUBCONTRACTORS I HIRE, EMPLOY, OR OTHERWISE CONTRACT OR WITH WHOM I MAKE AGREEMENTS TO PERFORM WORK. I AM VOLUNTARILY AND KNOWINGLY ASSUMING THIS RESPONSIBILITY.

B. ( ) I further certify the following as required by the New Jersey Uniform Construction Code, N.J.A.C. 5:23-2.15(e)1.vii:

I personally prepared the plans submitted for: 1) the new home referred to in A.; or, 2) an addition, alteration, renovation, or repair to an existing single family residence owned and occupied by myself and located on the property listed on Page 1; or, 3) a new structure that will be physically separate from, but that will be deemed part of, an existing single family residence that is owned and occupied by myself and located on the property listed on Page 1.

C. ( ) I further certify that I will perform or supervise the following work:
C.1. ( ) Building C.2. ( ) Fire Protection

I further certify that I will perform the following work:
C.3. ( ) Electrical C.4. ( ) Plumbing

D. ( ) I agree to advise all contractors on this project that they are required to be registered with the New Jersey Division of Taxation and to comply with all New Jersey tax laws.

I further certify the following as required by the Uniform Construction Code, N.J.A.C. 5:23-2.15(a)5: All required State, county, and local prior approvals have been given, including such certification as the construction official may require.

I understand that if any of the above statements are willfully false, I am subject to punishment.

Signature _____ Date _____

II. AGENT SECTION (to be completed if the applicant is not the owner in fee)

I hereby certify the following as required by the Uniform Construction Code, N.J.A.C. 5:32-2.15(d): the proposed work is authorized by the owner in fee; and I have been authorized by the owner in fee to make this application as his agent.

I further certify the following as required by the Uniform Construction Code, N.J.A.C. 5:23-2.15(a)5: All required State, county, and local prior approvals have been given, including such certification as the construction official may require.

I agree to advise all contractors on this project that they are required to be registered with the New Jersey Division of Taxation and to comply with all New Jersey tax laws.

I understand that if any of the above statements are willfully false, I am subject to punishment.

(✓ Check if contractor.

Agent Name RELIANCE CONSTRUCTION MANAGEMENT C/O DANIEL SMITH

Address 6703 ATLANTIC AVENUE
VENTNOR, NJ 08406

Telephone (609) 823-0800

Signature [signature] 3/20/01

III. ( ) LEAD HAZARD ABATEMENT: Include Homeowner or Building Owner Affidavit as per N.J.A.C. 5:17.