BLOCK 827 LOT 27 QUALIFICATION CODE CH-27 ADDRESS (SITE) 1629 Rt 88 EAST PERMIT NO. 03-4157

CONSTRUCTION PERMIT APPLICATION

NEW JERSEY UNIFORM CONSTRUCTION CODE

Application Completes: Sections I, II, III (optional), IV, VI, and VII

I. IDENTIFICATION

1. Propsed Work Site at: Elec. TO GAS Conversion with A/C
2. Name of Owner in Fee: Erich ~~Schmi~~ Schmidt Tel. ([redacted]
   Address PO Box U Brick NJ 08723
   street municipality zip code
3. Ownership in Fee: Public _____ Private X
4. Principal Contractor: EXTREME Tel. (732) 803-6087
   Address 215 Arrowhead Park Dr.
   License No. OR, if new home, Builder Reg. No. _____ Exp. Date _____
   Federal Employee No. 55-0796374 FAX: (732) 785-2551
5. Architect or Engineer _____ Tel. ( ) _____
   Address _____
6. Responsible Person in Charge of Work JOHN BOOKET
   Tel. ( ) SAME FAX ( ) SAME

V. FEE SUMMARY (for office use only)

			Update	Update
1. Building	$	50		
2. Electrical		60		
3. Plumbing		46		
4. Fire Protection				
5. Elevator Devices				
6. Subtotal	$			
7. Less 20% for State Plan Review				
8. Subtotal	$			
9. DCA Training Fee				
10. Subtotal				
11. Cert. of Occupancy				
12. Other				
13. TOTAL	$	159		

VI. BUILDING/SITE CHARACTERISTICS

		(office use only)
1. Number of Stories		
2. Height of Structure	ft.	
3. Area — Largest Floor	sq. ft.	
4. New Building Area	sq. ft.	
5. Volume of New Structure	cu. ft.	
6. Construction Classification		
7. Total Land Area Disturbed	sq. ft.	
8. Flood Hazard Zone		
9. Base Flood Elevation	ft.	
10. Wetlands yes		
no		
11. Max. Live Load		
12. Max. Occupancy Load		

Cont Elec to Gas

II. PROPOSED WORK

	Est. Cost	Plans Rec'd by	Date Rec'd	Rejection Date	Approval Date	Re-viewer	Resubmission Dates Approval	Resubmission Dates Rejection	Re-viewer
1. ☐ Minor Work									
2. ☐ New Building									
3. ☐ Addition									
4. ☐ Alteration									
5. ☐ Fire Protection									
6. ☑ Plumbing									
7. ☑ Electrical									
8. ☐ Elevator Devices									
9. ☐ Asbestos Abat. Subch. 8									
10. ☐ Lead Hazard Abatement									
11. ☐ Demolition									
TOTAL COSTS									

OPTIONAL (for office use only)

		8-29-03						
				9-4-03		2-21-07		
				9/4/03		12-28-08		
				9/10/03				

III. DO YOU WANT: (optional)

1. ☐ Partial Releases
2. ☐ Prototype Processing

IV. DOES OR WILL YOUR BUILDING CONTAIN ANY OF THE FOLLOWING?

1. ☐ Elevators/Escalators/Lifts/ Dumbwaiters/Moving Walks
2. ☐ High Pressure Boilers
3. ☐ Pressure Vessels
4. ☐ Refrigeration Systems
5. ☐ Cross-Connections/Backflow Preventers
6. ☐ Hazardous Uses/Places of Assembly
7. ☐ Sprinklers
8. ☐ Smoke Control Systems in Open Wells
9. ☐ Underground Storage Tanks

VII. DESCRIPTION OF BUILDING USE

A. RESIDENTIAL

1. ☐ Hotels (R-1)
2. ☐ Multi-Family (R-2)
3. ☐ Two-Family (R-3) BOCA
4. ☐ Two-Family (R-4) CABO
5. ☐ One-Family (R-3) BOCA
6. ☐ One-Family (R-4) CABO

No. of dwelling units:

Before Construction _____

After Construction _____

Net Gain or Loss _____

B. NON-RESIDENTIAL

1. State Specific Use:
2. Use Group:
3. Change in Use Group, Indicate Former:

CERTIFICATION IN LIEU OF OATH

I. OWNER SECTION (to be completed if the applicant is the owner in fee)

I hereby certify that I am the owner in fee of the property listed on Page 1.

Mark the following applicable boxes:

A. ( ) I further certify that a new home (private residence) will be constructed on this property for my own use and occupancy. This dwelling is to be occupied by myself and is not to be used for any purpose other than single family residential use. I attest that all construction, plumbing, or electrical work will be done, in whole or in part, by me or by subcontractors under my supervision, in accordance with all applicable laws; and, I further acknowledge that said new home is not covered under the New Home Warranty and Builders Registration Act (N.J.S.A. 46:3B-1 et seq.) and that such fact shall be disclosed to any person purchasing this property within ten years of the date of issuance of a certificate of occupancy.

I UNDERSTAND THAT IN MARKING BOX A, I ACKNOWLEDGE THAT I AM ASSUMING RESPONSIBILITY FOR THE WORK DONE ON SAID PROPERTY, THE CONDITION OF THE PROPERTY PRIOR TO, DURING, AND AFTER ANY WORK PERFORMED, AND FOR THE PERFORMANCE OF THE SUBCONTRACTORS I HIRE, EMPLOY, OR OTHERWISE CONTRACT OR WITH WHOM I MAKE AGREEMENTS TO PERFORM WORK. I AM VOLUNTARILY AND KNOWINGLY ASSUMING THIS RESPONSIBILITY.

B. ( ) I further certify the following as required by the New Jersey Uniform Construction Code, N.J.A.C. 5:23-2.15(e)1.vii:

I personally prepared the plans submitted for: 1) the new home referred to in A.; or, 2) an addition, alteration, renovation, or repair to an existing single family residence owned and occupied by myself and located on the property listed on Page 1; or, 3) a new structure that will be physically separate from, but that will be deemed part of, an existing single family residence that is owned and occupied by myself and located on the property listed on Page 1.

C. ( ) I further certify that I will perform or supervise the following work:
C.1. ( ) Building C.2. ( ) Fire Protection

I further certify that I will perform the following work:
C.3. ( ) Electrical C.4. ( ) Plumbing

D. ( ) I agree to advise all contractors on this project that they are required to be registered with the New Jersey Division of Taxation and to comply with all New Jersey tax laws.

I further certify the following as required by the Uniform Construction Code, N.J.A.C. 5:23-2.15(a)5: All required State, county, and local prior approvals have been given, including such certification as the construction official may require.

I understand that if any of the above statements are willfully false, I am subject to punishment.

Signature _____ Date _____

II. AGENT SECTION (to be completed if the applicant is not the owner in fee)

I hereby certify the following as required by the Uniform Construction Code, N.J.A.C. 5:32-2.15(d): the proposed work is authorized by the owner in fee; and I have been authorized by the owner in fee to make this application as his agent.

I further certify the following as required by the Uniform Construction Code, N.J.A.C. 5:23-2.15(a)5: All required State, county, and local prior approvals have been given, including such certification as the construction official may require.

I agree to advise all contractors on this project that they are required to be registered with the New Jersey Division of Taxation and to comply with all New Jersey tax laws.

I understand that if any of the above statements are willfully false, I am subject to punishment.

☒ Check if contractor.

Agent Name EXTREME AIR HTG & CLG LLC
Address 215 ARROWHEAD PARK RD
BRICK NJ 08724
Telephone (732) 803-6087
Signature JOHN J BOOKLET

III. ( ) LEAD HAZARD ABATEMENT: Include Homeowner or Building Owner Affidavit as per N.J.A.C. 5:17.

NJ UCCARS 5.24E

2/13/07 Violation

TOWNSHIP OF BRICK
401 CHAMBERS BRIDGE RD
DIVISION OF INSPECTIONS

UCC NEW JERSEY
PLUMBING
SUBCODE
TECHNICAL SECTION

Date Received 08/29/2003
Date Issued 9/18/03
Control # C04-27
Permit # 03-4157

A. IDENTIFICATION-APPLICANT: COMPLETE ALL APPLICABLE INFORMATION. WHEN CHANGING CONTRACTORS. NOTIFY THIS OFFICE. CALL UTILITY DIG NO: 1-800-272-1000

Block 827 Lot 27 Qual

Work Site Location 1629 ROUTE 88 EAST
ELECTRIC TO GAS

Owner in Fee SCHMIDT, ERICA

Address PO BOX V
BRICK, NJ -

Tele.(732)458-7800

Contractor EXTREME AIR HTG & COOLING LLC

Address 133 SAWMILL RD
BRICK, NJ 08724-

Tele.(732)803-5992

Lic. No. or Bldrs. Reg. No.

Federal Emp. No. 55-0796374

B. PLUMBING CHARACTERISTICS

Use Group Present R-5 Proposed R-5

Building Sewer Size [ ] Public Sewer [ ] Private Septic

Water Sewer Size [ ] Public Water [ ] Private Well

Estimated Cost of Plumbing Work $ 350

JOB SUMMARY (Office Use Only)

PLAN REVIEW
[ ] No Plans Required
Joint Plan Review Required:
[ ] Bldg [ ] Elect
[ ] Fire [ ] Elevator
[ ] Plumb. Plans Approved
Date: 9/4/03
Approved By:

SUBCODE APPROVAL
[ ] CO [ ] CCO [ ] CA
Approved By:
Date: 12-15-07

INSPECTIONS Type	Dates (Month/Day) Failure	Failure	Approval	Initial
Slab				
Rough				
Water				
Sewer				
Fixtures				
Gas Equip	2/22/07			
Gas Piping	9/26/03		10/8/03	
Solar				
TCO			12/15/08	

D. TECHNICAL SITE DATA (List all fixtures)

NO.	FIXTURE/EQUIPMENT	FEE (Office Use Only)
0	Water Closet	0
0	Urinal / Bidet	0
0	Bath Tub	0
0	Lavatory	0
0	Shower	0
0	Floor Drain	0
0	Sink	0
0	Dishwasher	0
0	Drinking Fountain	0
0	Washing Machine	0
0	Hose Bib	0
0	Water Heater	0
0	Fuel Oil Piping	0
1	Gas Piping 40' chart 1 - 90,000.	25
0	Steam Boiler	0
0	Hot Water Boiler	0
0	Sewer Pump	0
0	Interceptor / Separator	0
0	Backflow Preventer	0
0	Greasetrap	0
0	Sewer Connection	0
0	Water Service Connection	0
0	Stacks	0
	Other A/C	35
	Other	0

Paid [ ] Check # Collected by:

Administrative Surcharge	$	0
Minimum Fee	$	0
TOTAL FEE	$	60
DCA State Permit Fee	$	0

C. CERTIFICATION IN LIEU OF OATH

I hereby certify that I am the (agent of) owner of record and am authorized to make this application and perform the work listed on this application.

Signature/Contractor Seal

[ ] Licensed Plumbing Contractor [ ] Exempt Applicant

U.C.C. F130 (rev. 3/96)

TOWNSHIP OF BRICK
401 CHAMBERS BRIDGE RD
DIVISION OF INSPECTIONS

OCEAN COUNTY NEW JERSEY
PLUMBING
SUBCODE
TECHNICAL SECTION

Date Received 08/29/2003
Date Issued 9/18/03
Control # C04-27
Permit # C3-4157

9/26/03

① - CSST - TO CLOSE TO ROOF LINE
IN ATTIC

2/22/07

① - INSULATE CONDENSATE IN ATTIC
② - CONDENSATE DISCHARGE TO ?

NJ UCCARS 5.24E
TOWNSHIP OF BRICK
401 CHAMBERS BRIDGE RD
DIVISION OF INSPECTIONS

UCC NEW JERSEY
FIRE PROTECTION
SUBCODE
TECHNICAL SECTION

Date Received 08/29/2003
Date Issued 9/18/03
Control # C04-27
Permit # 03-4157

A. IDENTIFICATION-APPLICANT: COMPLETE ALL APPLICABLE INFORMATION. WHEN CHANGING CONTRACTORS. NOTIFY THIS OFFICE. CALL UTILITY DIG NO: 1-800-272-1000

Block 827 Lot 27 Qual

Work Site Location 1629 ROUTE 88 EAST
ELECTRIC TO GAS

Owner in Fee SCHMIDT, ERICA

Address PO BOX V
BRICK, NJ -

Tele.(732)458-7800

Contractor EXTREME AIR

Address 215 ARROWHEAD PARK DR
BRICK, NJ 08724-

Tele.( ) -

Lic. No. or Bldrs. Reg. No.

Federal Emp. No. 35-0796374

B. FIRE PROTECTION CHARACTERISTICS

Use Group Present R-5 Proposed R-5

Constr Class Present Proposed

Heating Systems [ ] New [ ] Existing [ ] HVAC

Type: [/] Gas [ ] Oil [ ] Elect [ ] Solar

[ ] Other a/c

Location:

Total Est Cost of Fire Prot Work $ 200

Fire Alarm System

New [ ] Existing [ ]

Location of Panel:

Fire Suppression/Standpipe Sys

New [ ] Existing [ ]

Location of Main Control Valve

JOB SUMMARY (Office Use Only)

PLAN REVIEW

[ ] No Plans Required

Joint Plan Review Required:

[ ] Bldg [ ] Elect

[ ] Plumb [ ] Elevator

[ ] Fire Plans Approved

Date: 9-5-03

Approved By: OB

SUBCODE APPROVAL

[ ] CO [ ] CCO [/] CA

Date: 2-2-07

Approved By: OB

INSPECTIONS Type	Dates (Month/Day) Failure	Failure	Approval	Initial
Alarm Sys				
Suppr Test				
Standpipe				
Fire Pump				
PreEng Sys				
Mechanical			2-2-07	OB
Smoke Ctl				
TCO				
Final			2-2-07	OB
Other				

C. CERTIFICATION IN LIEU OF OATH

I hereby certify that I am the (agent of) owner of record and am authorized to make this application.

Signature

D. TECHNICAL SITE DATA

Description of Work:

Water Supply Source

Method of Alarm/Suppr Sys Superv

Storage Tanks

Type: [ ] Flammable Liquid [ ] Combust Liquid

[ ] LPG [ ] LNG Capacity 0 Fuel

	NUMBER	FEE (Office Use Only)
Alarm Systems [ ] 110v Interconnected [ ] System		
Alarm Devices(smoke,heat,pulls,water/flow)	0	
Supervisory Devices (tampers,low/high air)	0	
Signalling Devices (horn/strobes, bells)	0	
Other Devices	0	
TOTAL	0	0
Suppression Systems		
Fire Pump 0 GPM Type	0	
Dry Pipe/Alarm Valves	0	
Pre-action Valves	0	
Sprinkler Heads (Dry and Wet)	0	0
Standpipes	0	0
Pre-Engineered Systems		
Wet Chemical	0	0
Dry Chemical	0	0
CO2 Suppression	0	0
Foam Suppression	0	0
Halon Suppression	0	0
Other		0
Kitchen Hood Exhaust System	0	0
Smoke Control System	0	0
Gas [ ] or Oil [ ] Fired Appliances	0	0
Other FURNACE		46
Other		0

Administrative Surcharge	$	0
Paid [ ] Check # Minimum Fee	$	0
Collected by: TOTAL FEE	$	46
DCA State Permit Fee	$	0

U.C.C. F140 (rev. 3/96)

Township of Brick
Counter Form
(PLEASE PRINT)

Site Location: 1629 RT. 88 EAST
Block: 827 Lot: 27
Owner's Name: Erich Schmidt
Owner's Mailing Address: P.O. BOX 4 BRICK, NJ. 08723
Phone: [redacted]

BUILDING

Contractor: EXTREME Air Htg & Clg LLC
Address: 215 Arrowhead Park Dr
Brick NJ 08724
Phone#: 732- [redacted] 803-6087
Lis #
Federal Emp # or SSN 55-0796374

Technical Data

Description of Work:

Type of Work

___New Building
___Addition
___Alteration
___Roofing
___Asbestos Abatement
___Fireplace wd/gas
___Siding
___Fence
___Pool
___Demolition
___Sign _____sq ft

Building Characteristics

Use Group Present:_____ Proposed:_____
No of Stories:
Height of Structure:
Area of the largest floor:
Area of New Structure: 0
Volume of New Structure:
Total Land Disturbed:

Cost of Alteration: $

Cost of New Building: $

Cost of Site Work $

Total Cost of New Building Work: $

I hereby certify that I am the agent/owner of record and am authorized to make this application and perform the work listed on this application.

Signature:

Please Print Name

ELECTRICAL

Contractor: EXTREME Air Htg & Clg LLC
Address: 215 Arrowhead Park Dr
Brick NJ 08724
Phone#: 732-803-6081
Lis #:
Federal Emp # or SSN 55-0796374

Technical Data

Item	Quantity
Lighting Fixtures	
Receptacles	1
Switches	1
Detectors	
Light Poles	
Motors w/ Fract. HP	
Emergency & Exit Lights	
Communication Points	
Alarm Devices/FAC Panel	
Total	

Pool (Receptacles, Switches, Lights, Motor 1HP)
Spa/Hot Tub/Storable Pool
Electric Range KW
Oven/Surface Unit KW
Electric Water Heater KW
Electric Dryer KW
Dishwasher KW
Garbage Disposal HP
A/C Unit –Central Air 4 TON (CHANGEOUT) KW
Space Heater/Air Handler KW
Baseboard Heating KW
Motors 1+ HP
Transformer/Generator KW
Light Stander AMP
Service AMP
Subpanel AMP
Motor Control Center AMP
Sign/Outline Light KW
Furnace 1 90,000 BTU 92% AFUE
Steam Boiler
Other:

Estimated Cost of Electrical Work: $350.00

I hereby certify that I am the agent/owner of record and am authorized to make this application and perform the work listed on this application.

Signature:

Please Print Name John J Bookert

CONTRACTOR'S SEAL

Counter Form
PLEASE PRINT

PLUMBING

Contractor: EXTREME Air
Address: 215 Arrowhead PARK DR
Brick NJ 08724
Phone #: 803-6087
Lis #:
Federal Emp # or SSN 55-0796374

Technical Data

Fixtures	Quantity
Water Closets (Toilet)	
Urinals/Bidets	
Bath Tub (w/or w/out shower head)	
Lavatory (BR Sink)	
Shower	
Floor Drain	
Sink	
Dishwasher	
Drinking Fountain	
Washing Machine	
Hose Bib	
Gas Piping	1 FURNACE
Fuel Oil Piping	
Water Heater	
Steam Boiler	
Hot Water Boiler	
Sewer Pump	
Interceptor/Separator	
Backflow Preventer	
Greasetrap	
Air Conditioner (Condensate Drain)	1. FURN & A/C
Septic Tank Closure	
Sewer Service Connection	
Water Service Connection	
Active Solar System	
Auxiliary Meter	
Sprinkler Heads	
Sump Pump	
Pool Heater	
Other:	

Estimated Cost of Plumbing Work 350 w/ex

I hereby certify that I ~~am the agent/owner of~~ record and am authorized to make this application and perform the work listed on this application.

Signature:

Please Print Name: John S Booket

CONTRACTOR'S SEAL

FIRE

Contractor: EXTREME Air
Address: 215 Arrowhead PARK DR
Brick NJ 08724
Phone #:
Lis #:
Federal Emp # or SSN 55-0796374

Technical Data

Description of Work:

Heating Type: X Gas ___ Oil ___ Electric ___ Solar
Heating System is ___ New X Existing
Location of Furnace/Boiler: ~~CRAWL SPACE~~ ATTIC
Water Supply Source
Method of Valve Supervision
Local Alarm Supervision
Central Supervision:
Proprietary Supervision:

Flammable Storage Tanks ___ capacity ___ fuel
Combustible Storage Tanks ___ capacity ___ fuel
LPG Storage Tanks ___ capacity ___ fuel

Item	Quantity
Wet Sprinkler Heads	
Dry Sprinkler Heads	
Total	
Smoke Detectors	
Heat Detectors	
Total	
Stand Pipes	
Kitchen Hood Exhaust System	

Pre-Engineered Systems:
CO2 Suppression
Halon Suppression
Foam Suppression
Dry Chemical
Wet Chemical

Gas/ Oil Fired Appliances:
Gas Stove
Gas Dryer
Furnace (Gas or Oil) 90,000 BTU 92% AFUE
Gas Fireplace
Gas Logs
Total Appliances 1

Wood Burning Stove
Wood Fireplace
Other:

Estimated Cost of Fire Work 200 w/ex

I hereby certify that I am the agent/owner of record and am authorized to make this application and perform the work listed on this application.

Signature:

Print Name: John S Booket

TOWNSHIP OF BRICK
401 CHAMBERS BRIDGE RD
DIVISION OF INSPECTIONS

Date Issued 09/18/2003
Control #
Permit # 03-4157

UCC NEW JERSEY

CONSTRUCTION PERMITS

IDENTIFICATION Block 327 Lot 27 Qual

Work Site Location 1629 ROUTE 88 EAST
ELECTRIC TO GAS

Owner in Fee SCHMIDT, ERICA
Address PO BOX V
BRICK NJ
Telephone [redacted]

Contractor EXTREME AIR HTG & COOLING LLC
Address 133 SAWMILL RD
BRICK, NJ 08724-
Telephone (732)803-5993
Lic. No. or Bldrs. Reg. No.
Federal Emp. No. 55-0796824

09/18/03 2:55PM 000000#3745
XX02 SERV.002

#4157	
ELECTRIC	$53.00
PLUMBING	$60.00
FIRE	$46.00
CHECK	$159.00

Is hereby granted permission to perform the following work:

[ ] BUILDING [X] PLUMBING [ ] LEAD HAZARD ABATEMENT
[X] ELECTRICAL [X] FIRE PROTECTION [ ] DEMOLITION
[ ] ELEVATOR DEVICES [ ] ASBESTOS ABATEMENT (Subchapter 8 only) [ ] OTHER

DESCRIPTION OF WORK:
ELECTRIC TO GAS

PAYMENTS (Office Use Only)

Building	0
Electrical	53
Plumbing	60
Fire Protection	46
Elevator Devices	0
Other	
DCA State Permit Fee	0
Cert. of Occupancy	0
Other	
Total	159
Check No.	#534
Cash	
Collected By	MJR

NOTE: If construction does not commence within one (1) year of date of issuance, or if construction ceases for a period of six (6) months, this permit is void.

Estimated Cost of Work $ 500

D. Truman
Construction Official

09/18/2003
Date

U.C.C. F170 (rev. 3/96) NJ UCCARS 5.246

NJ UCCARS 5.24E
TOWNSHIP OF BRICK
401 CHAMBERS BRIDGE RD
DIVISION OF INSPECTIONS

UCC NEW JERSEY
FIRE PROTECTION
SUBCODE
TECHNICAL SECTION

Date Received 08/29/2003
Date Issued 9/18/03
Control # C04-27
Permit # 03-4157

A. IDENTIFICATION-APPLICANT: COMPLETE ALL APPLICABLE INFORMATION. WHEN CHANGING CONTRACTORS. NOTIFY THIS OFFICE. CALL UTILITY DIG NO: 1-800-272-1000

Block 827 Lot 27 Qual
Work Site Location 1629 ROUTE 88 EAST
ELECTRIC TO GAS
Owner in Fee SCHMIDT, ERICA
Address PO BOX V
BRICK NJ -
Tele [redacted]
Contractor EXTREME AIR
Address 215 ARROWHEAD PARK DR
BRICK, NJ 08724-
Tele.( ) -
Lic. No. or Bldrs. Reg. No.
Federal Emp. No. 35-0796374

B. FIRE PROTECTION CHARACTERISTICS

Use Group Present R-5 Proposed R-5
Constr Class Present Proposed
Heating Systems [ ] New [ ] Existing [ ] HVAC
Type: [ ] Gas [ ] Oil [ ] Elect [ ] Solar
[ ] Other
Location:
Total Est Cost of Fire Prot Work $ 200

Fire Alarm System
New [ ] Existing [ ]
Location of Panel:
Fire Suppression/Standpipe Sys
New [ ] Existing [ ]
Location of Main Control Valve

JOB SUMMARY (Office Use Only)

PLAN REVIEW
[✓] No Plans Required
Joint Plan Review Required:
[ ] Bldg [ ] Elect
[ ] Plumb [ ] Elevator
[ ] Fire Plans Approved
Date: 9-25-03
Approved By:
SUBCODE APPROVAL
[ ] CO [ ] CCO [ ] CA
Date:
Approved By:

INSPECTIONS Type	Dates (Month/Day) Failure	Failure	Approval	Initial
Alarm Sys				
Suppr Test				
Standpipe				
Fire Pump				
PreEng Sys				
Mechanical				
Smoke Ctl				
TCO				
Final				
Other				

C. CERTIFICATION IN LIEU OF OATH

I hereby certify that I am the (agent of) owner of record and an authorized to make this application.

Signature

D. TECHNICAL SITE DATA

Description of Work:
Water Supply Source
Method of Alarm/Suppr Sys Superv

Storage Tanks	NUMBER	FEE (Office Use Only)
Type: [ ] Flammable Liquid [ ] Combust Liquid		
[ ] LPG [ ] LNG Capacity 0 Fuel		
Alarm Systems [ ] 110v Interconnected [ ] System		
Alarm Devices(smoke,heat,pulls,water/flow)	0	
Supervisory Devices (tampers,low/high air)	0	
Signalling Devices (horn/strobes, bells)	0	
Other Devices	0	
TOTAL	0	0
Suppression Systems		
Fire Pump 0 GPM Type	0	
Dry Pipe/Alarm Valves	0	
Pre-action Valves	0	
Sprinkler Heads (Dry and Wet)	0	0
Standpipes	0	0
Pre-Engineered Systems		
Wet Chemical	0	0
Dry Chemical	0	0
CO2 Suppression	0	0
Foam Suppression	0	0
Halon Suppression	0	0
Other		0
Kitchen Hood Exhaust System	0	0
Smoke Control System	0	0
Gas [ ] or Oil [ ] Fired Appliances	0	0
Other FURNACE		46
Other		0

need C.O. alarm installed.

Administrative Surcharge	$	0
Minimum Fee	$	0
TOTAL FEE	$	46
DCA State Permit Fee	$	0

Paid [ ] Check #
Collected by:

U.C.C. F140 (rev. 3/96)

NJ UCCARS 5.24E
TOWNSHIP OF BRICK
401 CHAMBERS BRIDGE RD
DIVISION OF INSPECTIONS

UCC NEW JERSEY
FIRE PROTECTION
SUBCODE
TECHNICAL SECTION

Date Received 08/29/2003
Date Issued 9/18/03
Control # C04-27
Permit # 03-4157

A. IDENTIFICATION-APPLICANT: COMPLETE ALL APPLICABLE INFORMATION. WHEN CHANGING CONTRACTORS. NOTIFY THIS OFFICE. CALL UTILITY DIG NO: 1-800-272-1000

Block 827 Lot 27 Qual
Work Site Location 1629 ROUTE 88 EAST
ELECTRIC TO GAS
Owner in Fee SCHMIDT, ERICA
Address PO BOX V
BRICK, NJ -
Tele. [redacted]
Contractor EXTREME AIR
Address 215 ARROWHEAD PARK DR
BRICK, NJ 08724-
Tele.( ) -
Lic. No. or Bldrs. Reg. No.
Federal Emp. No. 35-0796374

B. FIRE PROTECTION CHARACTERISTICS

Use Group Present R-5 Proposed R-5
Constr Class Present Proposed
Heating Systems [ ] New [ ] Existing [ ] HVAC
Type: [ ] Gas [ ] Oil [ ] Elect [ ] Solar
[ ] Other
Location:
Total Est Cost of Fire Prot Work $ 200

Fire Alarm System
New [ ] Existing [ ]
Location of Panel:
Fire Suppression/Standpipe Sys
New [ ] Existing [ ]
Location of Main Control Valve

JOB SUMMARY (Office Use Only)

PLAN REVIEW
[ ] No Plans Required
Joint Plan Review Required:
[ ] Bldg [ ] Elect
[ ] Plumb [ ] Elevator
[ ] Fire Plans Approved
Date:
Approved By:
SUBCODE APPROVAL
[ ] CO [ ] CCO [ ] CA
Date:
Approved By:

INSPECTIONS Type	Dates (Month/Day) Failure	Failure	Approval	Initial
Alarm Sys				
Suppr Test				
Standpipe				
Fire Pump				
PreEng Sys				
Mechanical				
Smoke Ctl				
TCO				
Final				
Other				

C. CERTIFICATION IN LIEU OF OATH

I hereby certify that I am the (agent of) owner of record and an authorized to make this application.

Signature

D. TECHNICAL SITE DATA

Description of Work:
Water Supply Source
Method of Alarm/Suppr Sys Superv

Storage Tanks	NUMBER	FEE (Office Use Only)
Type: [ ] Flammable Liquid [ ] Combust Liquid		
[ ] LPG [ ] LNG Capacity 0 Fuel		
Alarm Systems [ ] 110v Interconnected		
[ ] System		
Alarm Devices(smoke,heat,pulls,water/flow)	0	
Supervisory Devices (tampers,low/high air)	0	
Signalling Devices (horn/strobes, bells)	0	
Other Devices	0	
TOTAL	0	0
Suppression Systems		
Fire Pump 0 GPM Type	0	
Dry Pipe/Alarm Valves	0	
Pre-action Valves	0	
Sprinkler Heads (Dry and Wet)	0	0
Standpipes	0	0
Pre-Engineered Systems		
Wet Chemical	0	0
Dry Chemical	0	0
CO2 Suppression	0	0
Foam Suppression	0	0
Halon Suppression	0	0
Other		0
Kitchen Hood Exhaust System	0	0
Smoke Control System	0	0
Gas [ ] or Oil [ ] Fired Appliances	0	0
Other FURNACE		46
Other		0

Administrative Surcharge $ 0
Paid [ ] Check # Minimum Fee $ 0
Collected by: TOTAL FEE $ 46
DCA State Permit Fee $ 0

U.C.C. F140 (rev. 3/96)

NJ UCCARS 5.24E

TOWNSHIP OF BRICK
401 CHAMBERS BRIDGE RD
DIVISION OF INSPECTIONS

UCC NEW JERSEY
PLUMBING
SUBCODE
TECHNICAL SECTION

Date Received 08/29/2003
Date Issued 9/18/03
Control # C04-27
Permit # 03-4157

A. IDENTIFICATION-APPLICANT: COMPLETE ALL APPLICABLE INFORMATION. WHEN CHANGING CONTRACTORS. NOTIFY THIS OFFICE. CALL UTILITY DIG NO: 1-800-272-1000

Block 827 Lot 27 Qual

Work Site Location 1629 ROUTE 88 EAST
ELECTRIC TO GAS

Owner in Fee SCHMIDT, ERICA

Address PO BOX V
BRICK, NJ -

T[redacted]

Contractor EXTREME AIR HTG & COOLING LLC

Address 133 SAWMILL RD
BRICK, NJ 08724-

Tele.(732)803-5992

Lic. No. or Bldrs. Reg. No.

Federal Emp. No. 55-0796374

B. PLUMBING CHARACTERISTICS

Use Group Present R-5 Proposed R-5

Building Sewer Size [ ] Public Sewer [ ] Private Septic

Water Sewer Size [ ] Public Water [ ] Private Well

Estimated Cost of Plumbing Work $ 350

JOB SUMMARY (Office Use Only)

PLAN REVIEW
[ ] No Plans Required
Joint Plan Review Required:
[ ] Bldg [ ] Elect
[ ] Fire [ ] Elevator
[ ] Plumb. Plans Approved
Date: 9/4/03
Approved By:

SUBCODE APPROVAL
[ ] CO [ ] CCO [ ] CA
Approved By:
Date:

INSPECTIONS Type	Dates (Month/Day) Failure	Failure	Approval	Initial
Slab				
Rough				
Water				
Sewer				
Fixtures				
Gas Equip.				
Gas Piping				
Solar				
TCO				

D. TECHNICAL SITE DATA (List all fixtures.)

NO.	FIXTURE/EQUIPMENT	FEE (Office Use Only)
0	Water Closet	0
0	Urinal / Bidet	0
0	Bath Tub	0
0	Lavatory	0
0	Shower	0
0	Floor Drain	0
0	Sink	0
0	Dishwasher	0
0	Drinking Fountain	0
0	Washing Machine	0
0	Hose Bib	0
0	Water Heater	0
0	Fuel Oil Piping 40' CHART	0
1	Gas Piping 1" - 90,000.	25
0	Steam Boiler	0
0	Hot Water Boiler	0
0	Sewer Pump	0
0	Interceptor / Separator	0
0	Backflow Preventer	0
0	Greasetrap	0
0	Sewer Connection	0
0	Water Service Connection	0
0	Stacks	0
	Other A/C	35
	Other	0

	Administrative Surcharge	$ 0
Paid [ ] Check #	Minimum Fee	$ 0
Collected by:	TOTAL FEE	$ 60
	DCA State Permit Fee	$ 0

C. CERTIFICATION IN LIEU OF OATH

I hereby certify that I am the (agent of) owner of record and am authorized to make this application and perform the work listed on this application.

Signature/Contractor Seal

[ ] Licensed Plumbing Contractor [ ] Exempt Applicant

U.C.C. F130 (rev. 3/96)

NJ UCCARS 5.24E

TOWNSHIP OF BRICK
401 CHAMBERS BRIDGE RD
DIVISION OF INSPECTIONS

UCC NEW JERSEY
PLUMBING
SUBCODE
TECHNICAL SECTION

Date Received 08/29/2003
Date Issued 9/18/03
Control # C04-27
Permit # 03-4157

A. IDENTIFICATION-APPLICANT: COMPLETE ALL APPLICABLE INFORMATION. WHEN CHANGING CONTRACTORS. NOTIFY THIS OFFICE. CALL UTILITY DIG NO: 1-800-272-1000

Block 827 Lot 27 Qual

Work Site Location 1629 ROUTE 88 EAST
ELECTRIC TO GAS

Owner in Fee SCHMIDT, ERICA
Address PO BOX V
BRICK, NJ -
Te[redacted]
Co[redacted] AIR HTG & COOLING LLC
Address 133 SAWMILL RD
BRICK, NJ 08724-
Tele. (732)803-5992
Lic. No. or Bldrs. Reg. No.
Federal Emp. No. 55-0796374

B. PLUMBING CHARACTERISTICS

Use Group Present R-5 Proposed R-5
Building Sewer Size [ ] Public Sewer [ ] Private Septic
Water Sewer Size [ ] Public Water [ ] Private Well
Estimated Cost of Plumbing Work $ 350

JOB SUMMARY (Office Use Only)

PLAN REVIEW
[ ] No Plans Required
Joint Plan Review Required:
[ ] Bldg [ ] Elect
[ ] Fire [ ] Elevator
[ ] Plumb. Plans Approved
Date: 9/4/03
Approved By:

SUBCODE APPROVAL
[ ] CO [ ] CCO [ ] CA
Approved By:
Date:

INSPECTIONS Type	Dates (Month/Day) Failure	Failure	Approval	Initial
Slab				
Rough				
Water				
Sewer				
Fixtures				
Gas Equip.				
Gas Piping				
Solar				
TCO				

C. CERTIFICATION IN LIEU OF OATH

I hereby certify that I am the (agent of) owner of record and am authorized to make this application and perform the work listed on this application.

Signature/Contractor Seal
[ ] Licensed Plumbing Contractor [ ] Exempt Applicant

D. TECHNICAL SITE DATA (List all fixtures.)

NO.	FIXTURE/EQUIPMENT	FEE (Office Use Only)
0	Water Closet	0
0	Urinal / Bidet	0
0	Bath Tub	0
0	Lavatory	0
0	Shower	0
0	Floor Drain	0
0	Sink	0
0	Dishwasher	0
0	Drinking Fountain	0
0	Washing Machine	0
0	Hose Bib	0
0	Water Heater	0
0	Fuel Oil Piping 40' CHART	0
1	Gas Piping 1" - 90,000	25
0	Steam Boiler	0
0	Hot Water Boiler	0
0	Sewer Pump	0
0	Interceptor / Separator	0
0	Backflow Preventer	0
0	Greasetrap	0
0	Sewer Connection	0
0	Water Service Connection	0
0	Stacks	0
	Other A/C	35
	Other	0

Administrative Surcharge	$	0
Minimum Fee	$	0
TOTAL FEE	$	60
DCA State Permit Fee	$	0

Paid [ ] Check #
Collected by:

U.C.C. F130 (rev. 3/96)

PREPARED BY | DATE

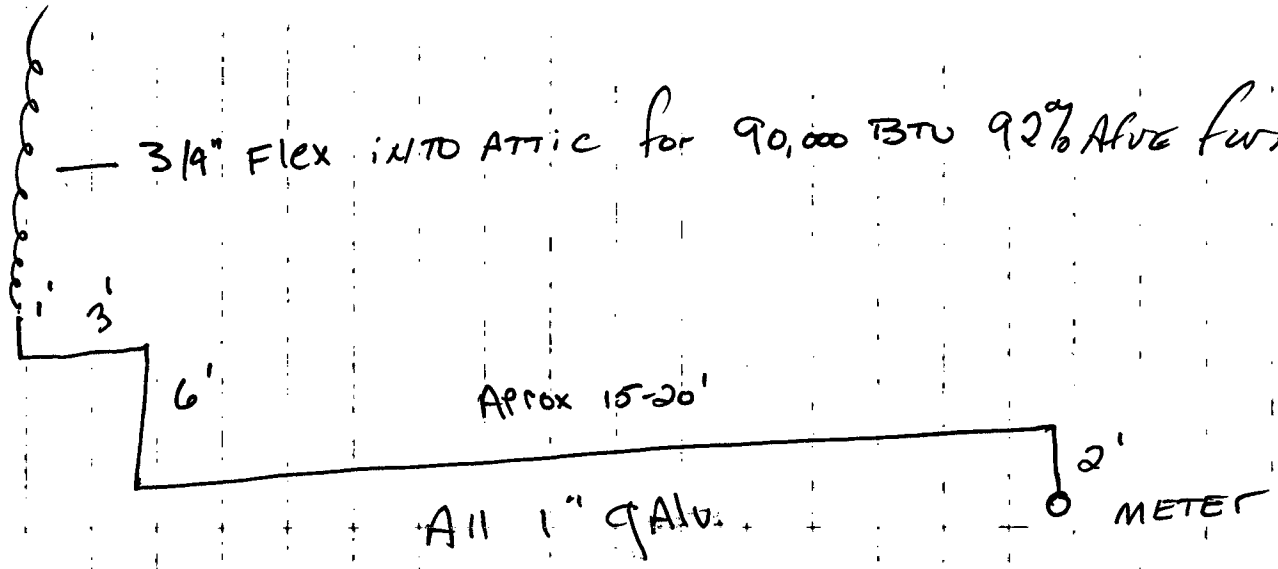

1629 RT 88 EAST
Brick NJ 08724
Block 827 - LOT 27.

40' CHART
1" - 90,000.
9/4/03

GAS Sketch.

FORM NO. A22-155 REV. 5
Supersedes Form No. A22-155 Rev. 4

CONDENSING UNITS

RUUD®

ACHIEVER 14®
SUPER HIGH EFFICIENCY CONDENSING UNITS

UAPA- SERIES
Nominal Sizes 2 to 5 Tons
[7.03 kW] to [17.58 kW]

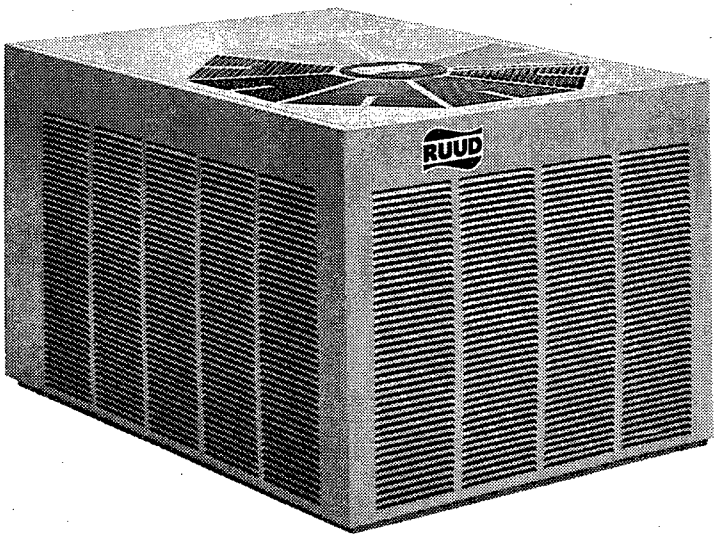

Six Models
Cooling Capacities
24,000 to 60,000 BTU/HR
[7.03 kW] to [17.58 kW]

The Ruud® Achiever 14® Super High Efficiency UAPA-Condensing Unit was designed with performance in mind. These units offer comfort, energy conservation and dependability for single, multi-family and light commercial applications.

The Ruud Achiever 14 UAPA- Condensing Units are the result of an ongoing development program for improved efficiencies. With SEER's ranging to 14.0, these units continue a tradition of high efficiency.

- Attractive, louvered wrap-around jacket protects the coil from yard hazards and weather extremes. Top grille is steel reinforced for extra strength. Cabinet is powder painted for all-weather protection.
- Air is discharged upward away from bushes and shrubs. The discharge pattern of the top grille provides minimum air restriction, resulting in quiet fan operation.
- Exclusive Combination Grille/Motor Mount secures the motor to the underside of the discharge grille. The grille protects the motor windings and bearings from rain and snow.
- All controls are accessible by removing one service panel. Removable top grille provides access to the condenser fan motor and condenser coil.
- Single speed motor designed for low speed, quiet, energy-saving operation.

energy EPA DOE

Accredited by the Dutch Council for Certification
ABS Quality Evaluations, Inc. Quality Assurance Certification
REGISTRAR ACCREDITATION BOARD
ISO 9002
Certificate Number: 30164

ENERGUIDE
Seasonal Energy Efficiency Ratio - SEER
THIS MODEL 14.00
10.0 USES LESS ENERGY 17.0

c UL US LISTED

"CERTIFIED UNDER THE A.R.I. CERTIFICATION PROGRAM—A.R.I. STANDARD 210"

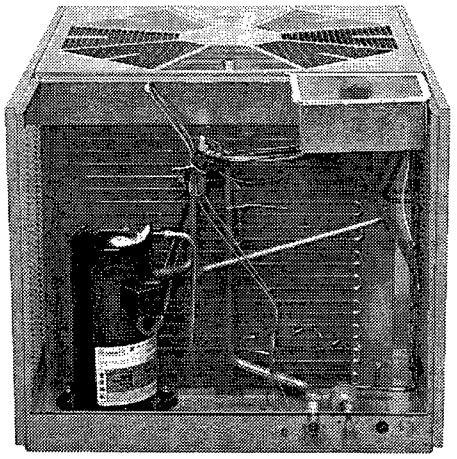

All controls and compressor are accessible for servicing by removal of the service panel.

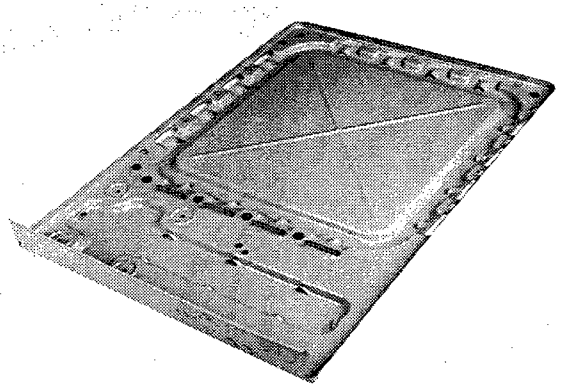

Drawn Painted Base Pan.

Engineering Features

UAPA- Series Condensing Units

1. Scroll compressor is hermetically sealed and incorporates internal high temperature motor overload protection, and durable insulation on the motor windings. It is externally mounted on rubber grommets to reduce vibration and noise.
2. Compressors have an internal pressure relief assembly to protect against excessive pressure differential.
3. All refrigerant connections are on the exterior of the unit, located close to the ground for neat appearing installations.
4. Cabinet is constructed of powder painted galvanized steel. The full wraparound louvered grille protects the coil from damage.
5. Copper Tube—Aluminum Fin coils are used on all models.
6. The control box is located in the top corner of the cabinet providing for easy access through a service panel.
7. Service valves are standard on all models.
8. Power and control wiring are kept separate.
9. Every unit is factory charged and tested.
10. Separate compressor compartment for easy service access.
11. Drawn, painted base pan for extra corrosion resistance and sound reduction.
12. **UAPA—JAZ Series** has a **10 year compressor limited warranty** and a liquid line filter drier. The JAZ Series also has factory installed low pressure control, high pressure control, time delay control and sound enclosure.

Field Installed Accessories

- **Compressor Time Delay Control**—Compressor will remain off for five minutes after power or thermostat interruption, allowing system pressures to equalize. (Model No. RXMD-B01)
- **Low Ambient Switch**—Cycles outdoor fan to maintain adequate condensing pressures assuring liquid refrigerant flow to the coil. Allows indoor cooling with outdoor temperatures down to 0°F [–17.8°C]. (Model No. RXAD-A04)

  It is recommended that this control be installed in units to be operated at outdoor ambient temperatures under 70°F [21°C].
- **Hard Start Kits**—Standard on 036/042/048/060 models. Option for 024 and 030 models.

COPELAND® SCROLL® COMPRESSOR

Copeland's new scroll compressor is the key to efficiency for this Ruud model. It's the latest in high-efficiency compressor technology. The advanced scroll compressor offers low noise and vibration characteristics and features tolerance to liquid refrigerant and system contamination. The Copeland Scroll also has low start torque, eliminating start problems in the field. And its unique design enables the UAPA- condensing unit to perform efficiently, quietly and reliably.

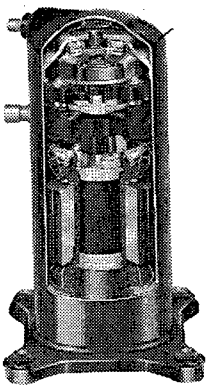

Model Number Identification

U	A	P	A	—	024	J	A*	Z
RUUD	CONDENSING UNIT	TYPE–P SUPER HI-EFFICIENCY	DESIGN SERIES		NOMINAL COOLING CAPACITY	ELECTRICAL DESIGNATION	VARIATIONS	COMPRESSOR TYPE
					024 = 24,000 BTU/HR [7.03 kW] 030 = 30,000 BTU/HR [8.79 kW] 036 = 36,000 BTU/HR [10.55 kW] 042 = 42,000 BTU/HR [12.31 kW] 048 = 48,000 BTU/HR [14.07 kW] 049 = 48,000 BTU/HR [14.07 kW] 060 = 60,000 BTU/HR [17.58 kW] 061 = 60,000 BTU/HR [17.58 kW]	J = 208-230-1-60	A = DELUXE MODEL	Z = COPELAND ZR SCROLL COMPRESSOR

[ ] Designates Metric Conversions

Performance Data @ ARI Standard Conditions—Cooling

Model Numbers		80°F [26.5°C] DB/67°F [19.5°C] WB Indoor Air 95°F [35°C] DB Outdoor Air					Sound Rating	Indoor CFM [L/s]
Outdoor Unit UAPA-	Indoor Coil and/or Air Handler	Total Capacity BTU/H [kW]	Net Sensible BTU/H [kW]	Net Latent BTU/H [kW]	EER	SEER		
024JAZ	RCGA-24A2	22,200 [6.48]	16,400 [4.80]	5,800 [1.68]	10.50	12.00	7.4	800 [380]
	RCGA-24A2 (UBEA-14)	22,400 [6.54]	16,600 [4.86]	5,800 [1.68]	10.80	12.20	7.4	800 [380]
	RCGA-24A2 (UBHA-14)	22,400 [6.54]	16,600 [4.86]	5,800 [1.68]	10.80	12.20	7.4	800 [380]
	RCGA-24A2 (UGFD-06?MCK?)	22,400 [6.54]	16,600 [4.86]	5,800 [1.68]	10.85	12.45	7.4	800 [380]
	RCGA-24A2 (UGFD-07?MCK?)	22,400 [6.54]	16,600 [4.86]	5,800 [1.68]	11.05	12.70	7.4	800 [380]
	RCGA-24A2 (UGLH-05?BMK?)	22,800 [6.66]	17,000 [4.98]	5,800 [1.68]	11.70	13.40	7.4	800 [380]
	RCGA-24A2 (UGLH-07?BRK?)	22,800 [6.66]	17,000 [4.98]	5,800 [1.68]	11.90	13.60	7.4	800 [380]
	RCGA-24A2 (UGLL-05?BMK?)	22,800 [6.66]	17,000 [4.98]	5,800 [1.68]	11.70	13.40	7.4	800 [380]
	RCGA-24A2 (UGPH-05?BMK?)	22,800 [6.66]	17,000 [4.98]	5,800 [1.68]	11.70	13.40	7.4	800 [380]
	RCGA-24A2 (UGPH-07?BRK?)	22,800 [6.66]	17,000 [4.98]	5,800 [1.68]	11.90	13.60	7.4	800 [380]
	RCGA-24A2 (UGPL-05?BMK?)	22,800 [6.66]	17,000 [4.98]	5,800 [1.68]	11.70	13.40	7.4	800 [380]
	RCGA-24A2 + RXMD-C02	22,200 [6.48]	16,400 [4.80]	5,800 [1.68]	10.50	12.10	7.4	800 [380]
	RCGA-24A2 + RXMD-C02 (UBEA-14)	22,400 [6.54]	16,600 [4.86]	5,800 [1.68]	10.80	12.30	7.4	800 [380]
	RCGA-24A2 + RXMD-C02 (UBHA-14)	22,400 [6.54]	16,600 [4.86]	5,800 [1.68]	10.80	12.30	7.4	800 [380]
	RCGJ-24A2	23,400 [6.84]	17,100 [5.01]	6,300 [1.83]	10.95	12.50	7.4	800 [380]
	RCGJ-24A2 (UBHJ-17) ①	24,000 [7.02]	17,700 [5.19]	6,300 [1.83]	12.20	14.00	7.4	800 [380]
	RCGJ-24A2 (UGFD-06?MCK?)	23,600 [6.90]	17,300 [5.07]	6,300 [1.83]	11.35	13.00	7.4	800 [380]
	RCGJ-24A2 (UGFD-07?MCK?)	23,600 [6.90]	17,300 [5.07]	6,300 [1.83]	11.45	13.15	7.4	800 [380]
	RCGJ-24A2 (UGLH-05?BMK?)	24,000 [7.02]	17,700 [5.19]	6,300 [1.83]	12.25	14.00	7.4	800 [380]
	RCGJ-24A2 (UGLH-07?BRK?)	24,000 [7.02]	17,700 [5.19]	6,300 [1.83]	12.40	14.20	7.4	800 [380]
	RCGJ-24A2 (UGLL-05?BMK?)	24,000 [7.02]	17,700 [5.19]	6,300 [1.83]	12.25	14.00	7.4	800 [380]
	RCGJ-24A2 (UGLL-07?BRK?)	24,000 [7.02]	17,700 [5.19]	6,300 [1.83]	12.40	14.20	7.4	800 [380]
	RCGJ-24A2 (UGPH-05?BMK?)	24,000 [7.02]	17,700 [5.19]	6,300 [1.83]	12.25	14.20	7.4	800 [380]
	RCGJ-24A2 (UGPH-07?BMK?)	24,000 [7.02]	17,700 [5.19]	6,300 [1.83]	12.40	14.20	7.4	800 [380]
	RCGJ-24A2 (UGPL-05?BMK?)	24,000 [7.02]	17,700 [5.19]	6,300 [1.83]	12.25	14.00	7.4	800 [380]
	RCGJ-24A2 (UGPL-07?BRK?)	24,000 [7.02]	17,700 [5.19]	6,300 [1.83]	12.40	14.20	7.4	800 [380]
	RCGJ-24A2 + RXMD-C02	23,400 [6.84]	17,100 [5.01]	6,300 [1.83]	10.95	12.60	7.4	800 [380]
030JA	RCGA-37A1	28,400 [8.34]	20,400 [6.00]	8,000 [2.34]	10.65	12.00	7.4	1,000 [470]
	RCGA-37A1 (UBEA-17)	28,600 [8.40]	20,600 [6.06]	8,000 [2.34]	11.00	12.20	7.4	1,000 [470]
	RCGA-37A1 (UBHA-17)	28,600 [8.40]	20,600 [6.06]	8,000 [2.34]	11.00	12.20	7.4	1,000 [470]
	RCGA-37A1 (UGFD-06?MCK?)	28,600 [8.40]	20,600 [6.06]	8,000 [2.34]	10.95	12.45	7.4	1,000 [470]
	RCGA-37A1 (UGFD-07?MCK?)	28,400 [8.34]	20,400 [6.00]	8,000 [2.34]	10.65	12.05	7.4	1,000 [470]
	RCGA-37A1 (UGLH-05?BMK?)	29,000 [8.52]	21,000 [6.18]	8,000 [2.34]	11.60	13.40	7.4	1,000 [470]
	RCGA-37A1 (UGLH-07?BRK?)	29,000 [8.52]	21,000 [6.18]	8,000 [2.34]	11.80	13.60	7.4	1,000 [470]
	RCGA-37A1 (UGLL-05?BMK?)	29,000 [8.52]	21,000 [6.18]	8,000 [2.34]	11.60	13.40	7.4	1,000 [470]
	RCGA-37A1 (UGLL-07?BRK?)	29,000 [8.52]	21,000 [6.18]	8,000 [2.34]	11.80	13.60	7.4	1,000 [470]
	RCGA-37A1 (UGLL-07?BRQ?)	29,000 [8.52]	21,000 [6.18]	8,000 [2.34]	11.80	13.60	7.4	1,000 [470]
	RCGA-37A1 (UGPH-05?BMK?)	29,000 [8.52]	21,000 [6.18]	8,000 [2.34]	11.60	13.40	7.4	1,000 [470]
	RCGA-37A1 (UGPH-07?BRK?)	29,000 [8.52]	21,000 [6.18]	8,000 [2.34]	11.80	13.60	7.4	1,000 [470]
	RCGA-37A1 (UGPL-05?BMK?)	29,000 [8.52]	21,000 [6.18]	8,000 [2.34]	11.60	13.40	7.4	1,000 [470]
	RCGA-37A1 (UGPL-07?BRK?)	29,000 [8.52]	21,000 [6.18]	8,000 [2.34]	11.80	13.60	7.4	1,000 [470]
	RCGA-37A1 (UGPL-07?BRQ?)	29,000 [8.52]	21,000 [6.18]	8,000 [2.34]	11.80	13.60	7.4	1,000 [470]
	RCGA-37A1 + RXMD-C02	28,400 [8.34]	20,400 [6.00]	8,000 [2.34]	10.65	12.10	7.4	1,000 [470]
	RCGA-37A1 + RXMD-C02 (UBEA-17)	28,600 [8.40]	20,600 [6.06]	8,000 [2.34]	11.00	12.30	7.4	1,000 [470]
	RCGA-37A1 + RXMD-C02 (UBHA-17)	28,600 [8.40]	20,600 [6.06]	8,000 [2.34]	11.00	12.30	7.4	1,000 [470]
	RCGJ-36A1	29,200 [8.58]	21,100 [6.18]	8,100 [2.40]	10.90	12.50	7.4	1,000 [470]
	RCGJ-36A1 (UBHJ-21) ①	30,000 [8.82]	21,900 [6.42]	8,100 [2.40]	12.05	14.00	7.4	1,000 [470]
	RCGJ-36A1 (UGLH-05?BMK?)	29,800 [8.76]	21,700 [6.36]	8,100 [2.40]	11.90	13.80	7.4	1,000 [470]
	RCGJ-36A1 (UGLH-07?BRK?)	30,000 [8.82]	21,900 [6.42]	8,100 [2.40]	12.10	14.00	7.4	1,000 [470]
	RCGJ-36A1 (UGLL-05?BMK?)	29,800 [8.76]	21,700 [6.36]	8,100 [2.40]	11.90	13.80	7.4	1,000 [470]
	RCGJ-36A1 (UGLL-07?BRK?)	30,000 [8.82]	21,900 [6.42]	8,100 [2.40]	12.10	14.00	7.4	1,000 [470]
	RCGJ-36A1 (UGLL-07?BRQ?)	30,000 [8.82]	21,900 [6.42]	8,100 [2.40]	12.10	14.00	7.4	1,000 [470]
	RCGJ-36A1 (UGPH-05?BMK?)	29,800 [8.76]	21,700 [6.36]	8,100 [2.40]	11.90	13.80	7.4	1,000 [470]
	RCGJ-36A1 (UGPH-07?BRK?)	30,000 [8.82]	21,900 [6.42]	8,100 [2.40]	12.10	14.00	7.4	1,000 [470]
	RCGJ-36A1 (UGPL-05?BMK?)	29,800 [8.76]	21,700 [6.36]	8,100 [2.40]	11.90	13.80	7.4	1,000 [470]
	RCGJ-36A1 (UGPL-07?BRK?)	30,000 [8.82]	21,900 [6.42]	8,100 [2.40]	12.10	14.00	7.4	1,000 [470]
	RCGJ-36A1 (UGPL-07?BRQ?)	30,000 [8.82]	21,900 [6.42]	8,100 [2.40]	12.10	14.00	7.4	1,000 [470]
	RCGJ-36A1 + RXMD-C02	29,200 [8.58]	21,100 [6.18]	8,100 [2.40]	10.90	12.60	7.4	1,000 [470]
	RCGJ-36A2 (UGFD-06?MCK?)	29,400 [8.64]	21,200 [6.24]	8,200 [2.40]	11.25	13.00	7.4	1,000 [470]
	RCGJ-36A2 (UGFD-07?MCK?)	29,200 [8.58]	21,100 [6.18]	8,200 [2.40]	10.85	12.50	7.4	1,000 [470]

① Highest sales volume tested combination required by D.O.E. test procedures.

[ ] Designates Metric Conversions

Performance Data @ ARI Standard Conditions—Cooling (cont.)

Model Numbers		80°F [26.5°C] DB/67°F [19.5°C] WB Indoor Air 95°F [35°C] DB Outdoor Air					Sound Rating	Indoor CFM [L/s]
Outdoor Unit UAPA-	Indoor Coil and/or Air Handler	Total Capacity BTU/H [kW]	Net Sensible BTU/H [kW]	Net Latent BTU/H [kW]	EER	SEER		
036JAZ	RCGA-36A2	32,800 [9.60]	24,200 [7.08]	8,600 [2.52]	10.55	12.00	7.6	1,200 [565]
	RCGA-36A2 (UBEA-17)	33,000 [9.66]	24,400 [7.14]	8,600 [2.52]	10.80	12.20	7.6	1,200 [565]
	RCGA-36A2 (UBHA-17)	33,000 [9.66]	24,400 [7.14]	8,600 [2.52]	10.80	12.20	7.6	1,200 [565]
	RCGA-36A2 (UGFD-07?MCK?)	32,800 [9.60]	24,200 [7.08]	8,600 [2.52]	10.50	12.00	7.6	1,200 [565]
	RCGA-36A2 (UGFD-09?ZCM?)	33,400 [9.78]	24,800 [7.26]	8,600 [2.52]	11.30	13.00	7.6	1,200 [565]
	RCGA-36A2 (UGFD-10?ZCM?)	33,400 [9.78]	24,800 [7.26]	8,600 [2.52]	11.20	12.85	7.6	1,200 [565]
	RCGA-36A2 (UGLH-05?BMK?)	33,400 [9.78]	24,800 [7.26]	8,600 [2.52]	11.35	13.20	7.6	1,200 [565]
	RCGA-36A2 (UGLH-07?BRK?)	33,400 [9.78]	24,800 [7.26]	8,600 [2.52]	11.45	13.30	7.6	1,200 [565]
	RCGA-36A2 (UGLL-05?BMK?)	33,400 [9.78]	24,800 [7.26]	8,600 [2.52]	11.35	13.20	7.6	1,200 [565]
	RCGA-36A2 (UGLL-07?BRK?)	33,400 [9.78]	24,800 [7.26]	8,600 [2.52]	11.45	13.30	7.6	1,200 [565]
	RCGA-36A2 (UGLL-07?BRQ?)	33,400 [9.78]	24,800 [7.26]	8,600 [2.52]	11.45	13.30	7.6	1,200 [565]
	RCGA-36A2 (UGLL-10?BRM?)	33,200 [9.72]	24,600 [7.20]	8,600 [2.52]	11.05	12.70	7.6	1,200 [565]
	RCGA-36A2 (UGPH-05?BMK?)	33,400 [9.78]	24,800 [7.26]	8,600 [2.52]	11.35	13.20	7.6	1,200 [565]
	RCGA-36A2 (UGPH-07?BRK?)	33,400 [9.78]	24,800 [7.26]	8,600 [2.52]	11.45	13.30	7.6	1,200 [565]
	RCGA-36A2 (UGPL-05?BMK?)	33,400 [9.78]	24,800 [7.26]	8,600 [2.52]	11.35	13.20	7.6	1,200 [565]
	RCGA-36A2 (UGPL-07?BRK?)	33,400 [9.78]	24,800 [7.26]	8,600 [2.52]	11.45	13.30	7.6	1,200 [565]
	RCGA-36A2 (UGPL-07?BRQ?)	33,400 [9.78]	24,800 [7.26]	8,600 [2.52]	11.45	13.30	7.6	1,200 [565]
	RCGA-36A2 (UGPL-10?BRM?)	33,200 [9.72]	24,600 [7.20]	8,600 [2.52]	11.05	12.70	7.6	1,200 [565]
	RCGA-36A2 + RXMD-C02	32,800 [9.60]	24,200 [7.08]	8,600 [2.52]	10.55	12.10	7.6	1,200 [565]
	RCGA-36A2 + RXMD-C02 (UBEA-17)	33,000 [9.66]	24,400 [7.14]	8,600 [2.52]	10.80	12.30	7.6	1,200 [565]
	RCGA-36A2 + RXMD-C02 (UBHA-17)	33,000 [9.66]	24,400 [7.14]	8,600 [2.52]	10.80	12.30	7.6	1,200 [565]
	RCGJ-36A2	34,200 [10.02]	24,500 [7.20]	9,700 [2.82]	10.95	12.50	7.6	1,200 [565]
	RCGJ-36A2 (UBHJ-21) ①	35,000 [10.26]	25,300 [7.44]	9,700 [2.82]	12.00	14.00	7.6	1,200 [565]
	RCGJ-36A2 (UGFD-07?MCK?)	34,200 [10.02]	24,400 [7.14]	9,800 [2.88]	10.90	12.50	7.6	1,200 [565]
	RCGJ-36A2 (UGFD-09?ZCM?)	34,800 [10.20]	25,000 [7.32]	9,800 [2.88]	11.70	13.40	7.6	1,200 [565]
	RCGJ-36A2 (UGFD-10?ZCM?)	34,800 [10.20]	25,000 [7.32]	9,800 [2.88]	11.65	13.30	7.6	1,200 [565]
	RCGJ-36A2 (UGFD-12?RCM?)	34,800 [10.20]	25,000 [7.32]	9,800 [2.88]	11.65	13.30	7.6	1,200 [565]
	RCGJ-36A2 (UGLH-05?BMK?)	34,800 [10.20]	25,100 [7.38]	9,700 [2.82]	11.80	13.80	7.6	1,200 [565]
	RCGJ-36A2 (UGLH-07?BRK?)	35,000 [10.26]	25,300 [7.44]	9,700 [2.82]	12.00	14.00	7.6	1,200 [565]
	RCGJ-36A2 (UGLH-10?BRK?)	34,600 [10.14]	24,900 [7.32]	9,700 [2.82]	11.60	13.50	7.6	1,200 [565]
	RCGJ-36A2 (UGLH-12?BRK?)	34,800 [10.20]	25,100 [7.38]	9,700 [2.82]	11.90	13.80	7.6	1,200 [565]
	RCGJ-36A2 (UGLL-05?BMK?)	34,800 [10.20]	25,100 [7.38]	9,700 [2.82]	11.80	13.80	7.6	1,200 [565]
	RCGJ-36A2 (UGLL-07?BRK?)	35,000 [10.26]	25,300 [7.44]	9,700 [2.82]	12.00	14.00	7.6	1,200 [565]
	RCGJ-36A2 (UGLL-07?BRQ?)	35,000 [10.26]	25,300 [7.44]	9,700 [2.82]	12.00	14.00	7.6	1,200 [565]
	RCGJ-36A2 (UGLL-10?BRM?)	34,600 [10.14]	24,900 [7.32]	9,700 [2.82]	11.60	13.50	7.6	1,200 [565]
	RCGJ-36A2 (UGLL-12?ARM?)	34,800 [10.20]	25,100 [7.38]	9,700 [2.82]	11.90	13.80	7.6	1,200 [565]
	RCGJ-36A2 (UGPH-05?BMK?)	34,800 [10.20]	25,100 [7.38]	9,700 [2.82]	11.80	13.80	7.6	1,200 [565]
	RCGJ-36A2 (UGPH-07?BRK?)	35,000 [10.26]	25,300 [7.44]	9,700 [2.82]	12.00	14.00	7.6	1,200 [565]
	RCGJ-36A2 (UGPH-10?BRK?)	34,600 [10.14]	24,900 [7.32]	9,700 [2.82]	11.60	13.50	7.6	1,200 [565]
	RCGJ-36A2 (UGPH-12?BRK?)	34,800 [10.20]	25,100 [7.38]	9,700 [2.82]	11.90	13.80	7.6	1,200 [565]
	RCGJ-36A2 (UGPL-05?BMK?)	34,800 [10.20]	25,100 [7.38]	9,700 [2.82]	11.80	13.80	7.6	1,200 [565]
	RCGJ-36A2 (UGPL-07?BRK?)	35,000 [10.26]	25,300 [7.44]	9,700 [2.82]	12.00	14.00	7.6	1,200 [565]
	RCGJ-36A2 (UGPL-07?BRQ?)	35,000 [10.26]	25,300 [7.44]	9,700 [2.82]	12.00	14.00	7.6	1,200 [565]
	RCGJ-36A2 (UGPL-10?BRM?)	34,600 [10.14]	24,900 [7.32]	9,700 [2.82]	11.60	13.50	7.6	1,200 [565]
	RCGJ-36A2 (UGPL-12?ARM?)	34,800 [10.20]	25,100 [7.38]	9,700 [2.82]	11.90	13.80	7.6	1,200 [565]
	RCGJ-36A2 + RXMD-C02	34,200 [10.02]	24,500 [7.20]	9,700 [2.82]	10.95	12.60	7.6	1,200 [565]
042JAZ	RCGA-48A1	39,000 [11.40]	28,500 [8.34]	10,500 [3.06]	10.65	12.00	7.6	1,400 [660]
	RCGA-48A1 (UBEA-21)	39,000 [11.40]	28,500 [8.34]	10,500 [3.06]	11.00	12.20	7.6	1,400 [660]
	RCGA-48A1 (UBHA-21)	39,000 [11.40]	28,500 [8.34]	10,500 [3.06]	11.00	12.20	7.6	1,400 [660]
	RCGA-48A1 (UGFD-09?ZCM?)	39,500 [11.55]	29,000 [8.52]	10,500 [3.03]	11.15	12.60	7.6	1,400 [660]
	RCGA-48A1 (UGFD-10?ZCM?)	39,000 [11.40]	28,400 [8.34]	10,600 [3.06]	10.90	12.40	7.6	1,400 [660]
	RCGA-48A1 (UGFD-12?RCM?)	39,000 [11.40]	28,400 [8.34]	10,600 [3.06]	10.90	12.40	7.6	1,400 [660]
	RCGA-48A1 (UGLH-07?BRM?)	39,000 [11.40]	28,500 [8.34]	10,500 [3.06]	11.40	13.30	7.6	1,320 [625]
	RCGA-48A1 (UGLH-10?BRM?)	39,500 [11.55]	29,000 [8.52]	10,500 [3.06]	11.20	13.00	7.6	1,400 [660]
	RCGA-48A1 (UGLH-12?BRM?)	39,500 [11.55]	29,000 [8.52]	10,500 [3.06]	11.35	13.20	7.6	1,400 [660]
	RCGA-48A1 (UGLL-07?BRQ?)	39,000 [11.40]	28,500 [8.34]	10,500 [3.06]	11.40	13.30	7.6	1,320 [625]
	RCGA-48A1 (UGLL-10?BRM?)	39,500 [11.55]	29,000 [8.52]	10,500 [3.06]	11.20	13.00	7.6	1,400 [660]
	RCGA-48A1 (UGLL-12?ARM?)	39,500 [11.55]	29,000 [8.52]	10,500 [3.06]	11.35	13.20	7.6	1,400 [660]
	RCGA-48A1 (UGPH-07?BRM?)	39,000 [11.40]	28,500 [8.34]	10,500 [3.06]	11.40	13.30	7.6	1,320 [625]
	RCGA-48A1 (UGPH-10?BRM?)	39,500 [11.55]	29,000 [8.52]	10,500 [3.06]	11.20	13.00	7.6	1,400 [660]
	RCGA-48A1 (UGPH-12?BRM?)	39,500 [11.55]	29,000 [8.52]	10,500 [3.06]	11.35	13.20	7.6	1,400 [660]

① Highest sales volume tested combination required by D.O.E. test procedures.

[ ] Designates Metric Conversions

Performance Data @ ARI Standard Conditions—Cooling (cont.)

Model Numbers		80°F [26.5°C] DB/67°F [19.5°C] WB Indoor Air 95°F [35°C] DB Outdoor Air					Sound Rating	Indoor CFM [L/s]
Outdoor Unit UAPA-	Indoor Coil and/or Air Handler	Total Capacity BTU/H [kW]	Net Sensible BTU/H [kW]	Net Latent BTU/H [kW]	EER	SEER		
042JAZ	RCGA-48A1 (UGPL-07?BRQ?)	39,000 [11.40]	28,500 [8.34]	10,500 [3.06]	11.40	13.30	7.6	1,320 [625]
	RCGA-48A1 (UGPL-10?BRM?)	39,500 [11.55]	29,000 [8.52]	10,500 [3.03]	11.20	13.00	7.6	1,400 [660]
	RCGA-48A1 (UGPL-12?ARM?)	39,500 [11.55]	29,000 [8.52]	10,500 [3.03]	11.35	13.20	7.6	1,400 [660]
	RCGA-48A1 + RXMD-C02	39,000 [11.40]	28,500 [8.34]	10,500 [3.06]	10.65	12.10	7.6	1,400 [660]
	RCGA-48A1 + RXMD-C02 (UBEA-21)	39,000 [11.40]	28,500 [8.34]	10,500 [3.03]	11.00	12.30	7.6	1,400 [660]
	RCGA-48A1 + RXMD-C02 (UBHA-21)	39,000 [11.40]	28,500 [8.34]	10,500 [3.03]	11.00	12.30	7.6	1,400 [660]
	RCGJ-48A1	40,000 [11.70]	28,900 [8.46]	11,100 [3.24]	10.90	12.50	7.6	1,400 [660]
	RCGJ-48A1 (UBHJ-24) ①	41,000 [12.00]	29,900 [8.76]	11,100 [3.24]	11.95	14.00	7.6	1,400 [660]
	RCGJ-48A1 (UGFD-09?ZCM?)	40,500 [11.85]	29,400 [8.64]	11,100 [3.21]	11.40	13.15	7.6	1,400 [660]
	RCGJ-48A1 (UGFD-10?ZCM?)	40,000 [11.70]	28,900 [8.46]	11,100 [3.24]	11.15	12.85	7.6	1,400 [660]
	RCGJ-48A1 (UGFD-12?RCM?)	40,000 [11.70]	28,900 [8.46]	11,100 [3.24]	11.15	12.90	7.6	1,400 [660]
	RCGJ-48A1 (UGLH-10?BRM?)	40,500 [11.85]	29,400 [8.64]	11,100 [3.21]	11.45	13.30	7.6	1,400 [660]
	RCGJ-48A1 (UGLH-12?BRM?)	40,500 [11.85]	29,400 [8.64]	11,100 [3.21]	11.65	13.60	7.6	1,400 [660]
	RCGJ-48A1 (UGLL-07?BRQ?)	41,000 [12.00]	29,900 [8.76]	11,100 [3.24]	11.90	13.80	7.6	1,400 [660]
	RCGJ-48A1 (UGLL-10?BRM?)	40,500 [11.85]	29,400 [8.64]	11,100 [3.21]	11.45	13.30	7.6	1,400 [660]
	RCGJ-48A1 (UGLL-12?ARM?)	40,500 [11.85]	29,400 [8.64]	11,100 [3.21]	11.65	13.60	7.6	1,400 [660]
	RCGJ-48A1 (UGPH-10?BRM?)	40,500 [11.85]	29,400 [8.64]	11,100 [3.21]	11.45	13.30	7.6	1,400 [660]
	RCGJ-48A1 (UGPH-12?BRM?)	40,500 [11.85]	29,400 [8.64]	11,100 [3.21]	11.65	13.60	7.6	1,400 [660]
	RCGJ-48A1 (UGPL-07?BRQ?)	41,000 [12.00]	29,900 [8.76]	11,100 [3.24]	11.90	13.80	7.6	1,400 [660]
	RCGJ-48A1 (UGPL-10?BRM?)	40,500 [11.85]	29,400 [8.64]	11,100 [3.21]	11.45	13.30	7.6	1,400 [660]
	RCGJ-48A1 (UGPL-12?ARM?)	40,500 [11.85]	29,400 [8.64]	11,100 [3.21]	11.65	13.60	7.6	1,400 [660]
	RCGJ-48A1 + RXMD-C02	40,000 [11.70]	28,900 [8.46]	11,100 [3.24]	10.90	12.60	7.6	1,400 [660]
048JAZ/ 049JAZ	RCGA-48A1	42,000 [12.30]	31,000 [9.06]	11,000 [3.24]	10.90	12.00	7.6	1,575 [745]
	RCGA-48A1 (UBEA-21)	42,000 [12.30]	31,000 [9.06]	11,000 [3.24]	10.90	12.20	7.6	1,575 [745]
	RCGA-48A1 (UBHA-21)	42,000 [12.30]	31,000 [9.06]	11,000 [3.24]	10.90	12.20	7.6	1,575 [745]
	RCGA-48A1 (UGFD-09?ZCM?)	44,000 [12.90]	31,500 [9.24]	12,500 [3.66]	11.00	12.20	7.6	1,590 [750]
	RCGA-48A1 (UGFD-10?ZCM?)	42,500 [12.45]	31,500 [9.24]	11,000 [3.21]	10.95	12.70	7.6	1,590 [750]
	RCGA-48A1 (UGFD-12?RCM?)	42,500 [12.45]	31,500 [9.24]	11,000 [3.21]	10.95	12.15	7.6	1,590 [750]
	RCGA-48A1 (UGLH-10?BRM?)	42,500 [12.45]	31,500 [9.24]	11,000 [3.21]	11.35	13.00	7.6	1,575 [745]
	RCGA-48A1 (UGLH-12?BRM?)	42,500 [12.45]	30,500 [8.94]	12,000 [3.51]	11.40	13.10	7.6	1,575 [745]
	RCGA-48A1 (UGLL-07?BRQ?)	43,000 [12.60]	32,000 [9.36]	11,000 [3.24]	11.80	13.30	7.6	1,575 [745]
	RCGA-48A1 (UGLL-10?BRM?)	42,500 [12.45]	31,500 [9.24]	11,000 [3.21]	11.35	13.00	7.6	1,575 [745]
	RCGA-48A1 (UGLL-12?ARM?)	42,500 [12.45]	30,500 [8.94]	12,000 [3.51]	11.40	13.10	7.6	1,575 [745]
	RCGA-48A1 (UGPH-10?BRM?)	42,500 [12.45]	31,500 [9.24]	11,000 [3.21]	11.35	13.00	7.6	1,575 [745]
	RCGA-48A1 (UGPH-12?BRM?)	42,500 [12.45]	30,500 [8.94]	12,000 [3.51]	11.40	13.10	7.6	1,575 [745]
	RCGA-48A1 (UGPL-07?BRQ?)	43,000 [12.60]	32,000 [9.36]	11,000 [3.24]	11.80	13.30	7.6	1,575 [745]
	RCGA-48A1 (UGPL-10?BRM?)	42,500 [12.45]	31,500 [9.24]	11,000 [3.24]	11.35	13.00	7.6	1,575 [745]
	RCGA-48A1 (UGPL-12?ARM?)	42,500 [12.45]	30,500 [8.94]	12,000 [3.51]	11.40	13.10	7.6	1,575 [745]
	RCGA-48A1 + RXMD-C02	42,000 [12.30]	31,000 [9.06]	11,000 [3.24]	10.90	12.10	7.6	1,575 [745]
	RCGA-48A1 + RXMD-C02 (UBEA-21)	42,000 [12.30]	31,000 [9.06]	11,000 [3.24]	10.90	12.30	7.6	1,575 [745]
	RCGA-48A1 + RXMD-C02 (UBHA-21)	42,000 [12.30]	31,000 [9.06]	11,000 [3.24]	10.90	12.30	7.6	1,575 [745]
	RCGJ-60A1	44,000 [12.90]	32,000 [9.36]	12,000 [3.54]	11.35	12.50	7.6	1,600 [755]
	RCGJ-60A1 (UBHJ-24) ①	44,500 [13.05]	32,500 [9.54]	12,000 [3.51]	12.15	14.00	7.6	1,600 [755]
	RCGJ-60A1 (UGFD-09?ZCM?)	44,000 [12.90]	32,000 [9.36]	12,000 [3.54]	11.50	12.70	7.6	1,600 [755]
	RCGJ-60A1 (UGFD-10?ZCM?)	44,000 [12.90]	32,000 [9.36]	12,000 [3.51]	11.40	12.60	7.6	1,600 [755]
	RCGJ-60A1 (UGFD-12?RCM?)	44,000 [12.90]	32,000 [9.36]	12,000 [3.54]	11.45	12.60	7.6	1,600 [755]
	RCGJ-60A1 (UGLH-10?BRM?)	44,000 [12.90]	32,000 [9.36]	12,000 [3.54]	11.65	13.40	7.6	1,600 [755]
	RCGJ-60A1 (UGLH-12?BRM?)	44,000 [12.90]	32,000 [9.36]	12,000 [3.54]	11.90	13.70	7.6	1,600 [755]
	RCGJ-60A1 (UGLL-07?BRQ?)	45,000 [13.20]	33,000 [9.66]	12,000 [3.54]	12.30	13.90	7.6	1,600 [755]
	RCGJ-60A1 (UGLL-10?BRM?)	44,000 [12.90]	32,000 [9.36]	12,000 [3.54]	11.65	13.40	7.6	1,600 [755]
	RCGJ-60A1 (UGLL-12?ARM?)	44,000 [12.90]	32,000 [9.36]	12,000 [3.54]	11.90	13.70	7.6	1,600 [755]
	RCGJ-60A1 (UGPH-10?BRM?)	44,000 [12.90]	32,000 [9.36]	12,000 [3.54]	11.65	13.40	7.6	1,600 [755]
	RCGJ-60A1 (UGPH-12?BRM?)	44,000 [12.90]	32,000 [9.36]	12,000 [3.54]	11.90	13.70	7.6	1,600 [755]
	RCGJ-60A1 (UGPL-07?BRQ?)	45,000 [13.20]	33,000 [9.66]	12,000 [3.54]	12.30	13.90	7.6	1,600 [755]
	RCGJ-60A1 (UGPL-10?BRM?)	44,000 [12.90]	32,000 [9.36]	12,000 [3.54]	11.65	13.40	7.6	1,600 [755]
	RCGJ-60A1 (UGPL-12?ARM?)	44,000 [12.90]	32,000 [9.36]	12,000 [3.54]	11.90	13.70	7.6	1,600 [755]
	RCGJ-60A1 + RXMD-C02	44,000 [12.90]	32,000 [9.36]	12,000 [3.54]	11.35	12.60	7.6	1,600 [755]
060JAZ/ 061JAZ	RCGJ-60A1	51,000 [15.00]	36,200 [10.62]	14,800 [4.38]	11.00	12.40	7.8	1,800 [850]
	RCGJ-60A1 (UBHJ-25) ①	52,000 [15.30]	37,200 [10.92]	14,800 [4.38]	11.85	13.50	7.8	1,800 [850]
	RCGJ-60A1 + RXMD-C02	51,000 [15.00]	36,200 [10.62]	14,800 [4.38]	11.00	12.45	7.8	1,800 [850]
	RCGJ-60A1 (UBHJ-25)	55,000 [16.05]	40,500 [11.85]	14,500 [4.20]	12.25	14.00	7.8	1,800 [850]

① Highest sales volume tested combination required by D.O.E. test procedures.

[ ] Designates Metric Conversions

Electrical and Physical Data

Model Number UAPA-	ELECTRICAL							PHYSICAL					
	Phase Frequency (Hz) Voltage (Volts)	Compressor		Fan Motor Full Load Amperes (FLA)	Minimum Circuit Ampacity Amperes	Fuse or HACR Circuit Breaker		Outdoor Coil			R22 Oz. [g]	Weight	
		Rated Load Amperes (RLA)	Locked Rotor Amperes (LRA)			Minimum Amperes	Maximum Amperes	Face Area Sq. Ft. [m²]	No. Rows	CFM [L/s]		Net Lbs. [kg]	Shipping Lbs. [kg]
024JA	1-60-208-230	10.3/10.3	56	.8	14/14	20/20	20/20	11.0 [1.022]	1	2110 [996]	72 [2041]	175 [79.4]	185 [83.9]
030JA	1-60-208-230	13.5/13.5	72.5	.8	18/18	25/25	30/30	15.8 [1.468]	1	2355 [1111]	104 [2948]	220 [99.8]	230 [104.3]
036JA	1-60-208-230	16.0/16.0	88	1.2	21/21	30/30	35/35	15.4 [1.431]	2	3190 [1506]	183 [5188]	255 [115.7]	265 [120.2]
042JA	1-60-208-230	17.9/17.9	104	1.2	24/24	30/30	40/40	15.4 [1.431]	2	3190 [1506]	157 [4451]	255 [115.7]	265 [120.2]
048JA/ 049JA	1-60-208-230	18.3/18.3	109	2.0	25/25	30/30	40/40	22.2 [2.062]	2	3500 [1652]	240 [6804]	300 [136.1]	323 [146.5]
060JA/ 061JA	1-60-208-230	23.7/23.7	129	2.0	32/32	40/40	50/50	22.2 [2.062]	2	3500 [1652]	262 [7428]	320 [145.1]	343 [155.6]

Unit Dimensions

FIGURE 1
DIMENSIONS

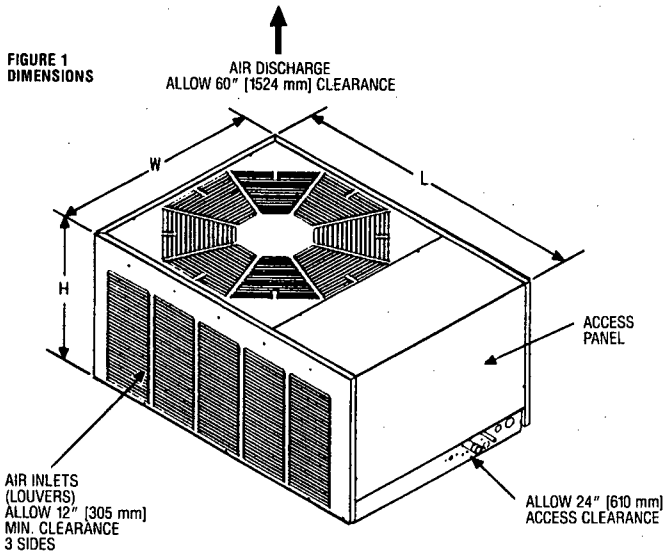

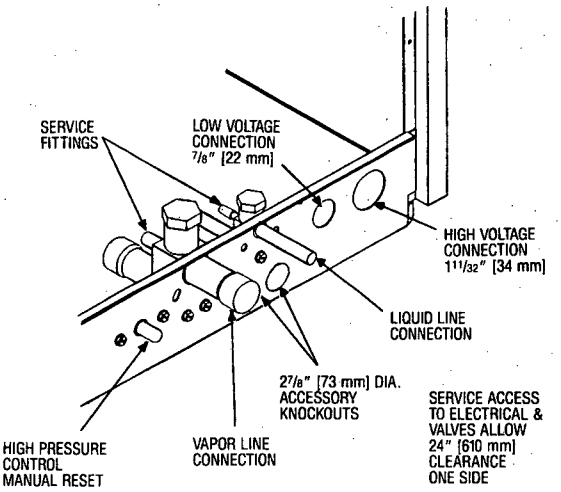

Model Number UAPA-	Height "H" (Inches) [mm]	Length "L" (Inches) [mm]	Width "W" (Inches) [mm]
024	203/4 [527]	3811/16 [903]	271/8 [689]
030/036/042	263/4 [539]	429/16 [1082]	31 [787]
048/049/060/061	343/4 [883]	43 [1092]	31 [787]

[ ] Designates Metric Conversions

GENERAL TERMS OF LIMITED WARRANTY

Ruud will furnish a replacement for any part of this product which fails in normal use and service within the applicable period stated, in accordance with the terms of the limited warranty.

For Complete Details of the Limited Warranty, Including Applicable Terms and Conditions, See Your Local Installer or Contact the Manufacturer for a Copy.

Condenser Coil leaks caused by
factory defects.....Five (5) Years
Compressor .....Ten (10) Years
Any Other Part .....Five (5) Years

***This five year limited warranty is applicable only to single-phase products installed in residential applications on or after January 1, 2001.**

BEFORE PURCHASING THIS APPLIANCE, READ IMPORTANT ENERGY COST AND EFFICIENCY INFORMATION AVAILABLE FROM YOUR RETAILER.

Condensing Unit Refrigerant Line Size Information

System Capacity Tons [kW]	Line Size (Inch O.D.) [mm]	Liquid Line Size Outdoor Unit Above Indoor Coil — Total Length—Feet [m] / Vertical Separation—Feet [m]						Liquid Line Size Outdoor Unit Below Indoor Coil — Total Length—Feet [m] / Vertical Separation—Feet [m]					
		25 [7.62]	50 [15.24]	75 [22.86]	100 [30.48]	125 [38.10]	150 [45.72]	25 [7.62]	50 [15.24]	75 [22.86]	100 [30.48]	125 [38.10]	150 [45.72]
2 [7.03]	1/4* [6.35]	25 [7.62]	50 [15.24]					25 [7.62]	23 [7.01]				
	5/16 [7.94]		24 [7.32]	34 [10.36]	44 [13.41]	54 [16.46]	64 [19.51]		48 [14.63]	38 [11.58]	28 [8.53]	18 [5.49]	8 [2.44]
2.5 [8.79]	1/4* [6.35]	25 [7.62]	50 [15.24]					25 [7.62]	23 [7.01]				
	5/16 [7.94]		19 [5.79]	33 [10.06]	47 [14.33]	61 [18.59]			50 [15.24]	39 [11.89]	25 [7.62]	11 [3.35]	
	3/8 [9.53]					11 [3.35]	15 [4.57]						57 [17.37]
3 [10.55]	5/16* [7.94]	25 [7.62]	50 [15.24]	70 [21.34]				25 [7.62]	23 [7.01]	9 [2.74]			
	3/8 [9.53]			34 [10.36]	40 [12.19]	46 [14.02]	52 [15.85]			38 [11.58]	32 [9.75]	26 [7.92]	20 [6.10]
3.5 [12.30]	5/16* [7.94]	25 [7.62]	50 [15.24]	75 [22.86]				25 [7.62]	23 [7.01]	9 [2.74]			
	3/8 [9.53]			32 [9.75]	39 [11.89]	46 [14.02]	53 [16.15]			40 [12.19]	33 [10.06]	26 [7.92]	19 [5.79]
4 [14.06]	3/8* [9.53]	25 [7.62]	44 [13.41]	53 [16.15]	61 [18.59]	70 [21.34]		25 [7.62]	28 [8.53]	19 [5.79]	11 [3.35]	3 [.91]	
	1/2 [12.7]					37 [11.28]	39 [11.89]					35 [10.67]	33 [10.06]
5 [17.58]	3/8* [9.53]	25 [7.62]	48 [14.63]	61 [18.59]	72 [21.95]			25 [7.62]	23 [7.01]	11 [3.35]	3 [.91]		
	1/2 [12.7]				35 [10.67]	38 [11.58]	41 [12.50]				37 [11.28]	34 [10.36]	31 [9.45]

*Standard line size

NOTES:

① This chart is applicable for condensing units.

② If the separation height exceeds the table values, **reduce** the indoor coil flow-check piston two sizes plus one size for each additional 10 feet [3.05 m].
Example 1: A 5 ton [17.58 kW] *condensing unit* with a total line length of 125 feet [38.10 m] with a vertical separation of 101 feet [30.78 m] utilizing a 1/2" [12.7 mm] liquid line: Table = 38 feet [11.58 m] maximum vertical separation for 125 feet [38.10 m] run. Separation exceeds table by (101-38) = 63 feet [19.20 m]. Therefore, reduce the indoor coil flow-check piston 2 + 6 = 8 sizes (For example, a #89 piston would reduce to a #81 piston)

③ Do not exceed 120 feet [36.58 m] maximum vertical separation.

④ No changes are required for expansion valve coils.

⑤ Do not exceed table values for capillary tube coils.

⑥ Always use the smallest liquid line possible to minimize system charge.

⑦ Chart may be used to size horizontal runs.

NOTES:

① This chart is applicable for condensing units.
Example 1: A 2.5 ton [8.79 kW] *condensing unit* with a total line length of 75 feet [22.86 m] with a vertical separation of 30 feet [9.14 m] requires a liquid line size of 5/16" [7.94 mm].

② This chart may also be used to size horizontal runs.
Example 2: A 5 ton [17.58 kW] *condensing unit* may have a total horizontal run of 100 feet [30.48 m] if using the 3/8" [9.53 mm] liquid line. The total horizontal run if using 1/2" [12.7 mm] liquid line size will be 150 feet [45.72 m]

③ Do not exceed vertical separation as indicated on the chart.

④ Always use the smallest liquid line possible to minimize system charge.

⑤ No changes required for flow-check pistons or expansion valve coils.

Suction Line Length/Size versus Capacity Multiplier

UAPA-		024	030	036	042	048/049	060/061
Unit Suction Line Connection Size		3/4" [19.05 mm] I.D. Sweat			7/8" [22.23 mm] I.D. Sweat	1 1/8" [28.58 mm] I.D. Sweat*	
Suction Line Run—Feet [m]		5/8" [15.88 mm] O.D. Optional 3/4" [19.05 mm] O.D. Standard 7/8" [22.23 mm] O.D. Optional			3/4" [19.05 mm] O.D. Optional 7/8" [22.23 mm] O.D. Standard 1 1/8" [28.58 mm] O.D. Optional	7/8" [22.23 mm] O.D. Optional 1 1/8" [28.58 mm] O.D. Standard 1 3/8" [34.93 mm] O.D. Optional	
25' [7.62]	Optional	.98	—	—	—	.99	.99
	Standard	1.00	1.00	1.00	1.00	1.00	1.00
	Optional	1.01	1.01	1.01	1.01	1.01	1.01
50' [15.24]	Optional	.96	—	—	—	.97	.97
	Standard	.99	.99	.98	.99	1.00	.99
	Optional	1.00	1.00	1.00	1.01	1.01	1.01
100' [30.48]	Optional	.93	—	—	—	.96	.95
	Standard	.98	.97	.96	.98	.99	.99
	Optional	.99	.99	.99	1.00	1.00	1.00
150' [45.72]	Optional	—	—	—	—	.93	.93
	Standard	.97	.95	.93	.96	.99	.98
	Optional	.98	.97	.97	.99	1.00	.99

NOTES: Capacity Multiplier x Rated Capacity = Actual Capacity.
Additional compressor oil is not required for runs up to 150 feet [45.72 m].
Oil traps in vertical runs are not required for any height up to 125 feet [38.10 m]. See Liquid Line chart for Vertical Separation Requirements and Limitations.
*Adapter to 1 1/8" [28.58 mm] factory supplied.

[ ] Designates Metric Conversions

Before proceeding with installation, refer to installation instructions packaged with each model, as well as complying with all Federal, State, Provincial, and Local codes, regulations, and practices.

RUUD
AIR CONDITIONING
DIVISION

5600 Old Greenwood Road, Fort Smith, Arkansas 72908

"In keeping with its policy of continuous progress and product improvement, Ruud reserves the right to make changes without notice."

PRINTED IN U.S.A. 1-01 DC

FORM NO. A22-155 REV. 5
Supersedes Form No. A22-155 Rev. 4

FORM NO. G22-452 REV. 5
Supersedes Form No. G22-452 Rev. 4

GAS FURNACES

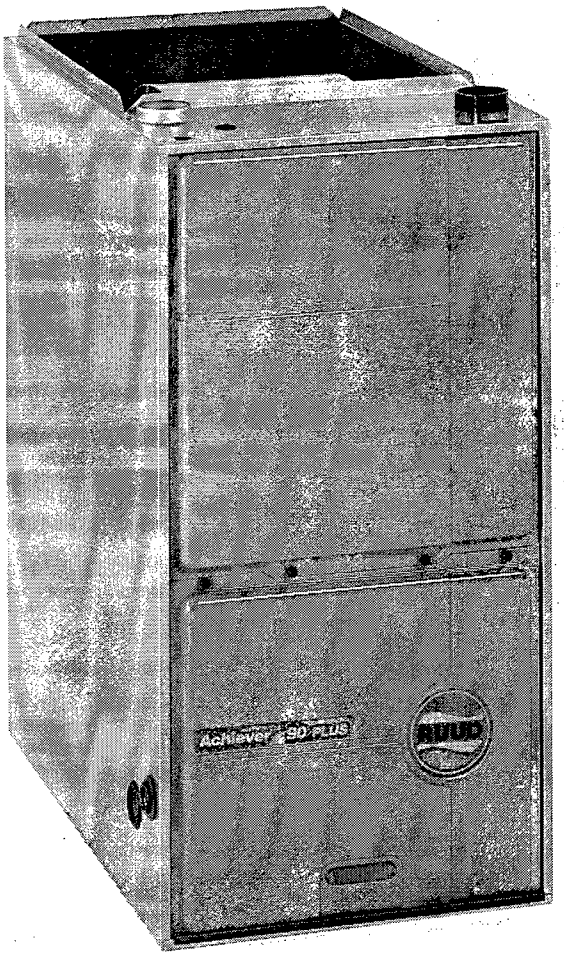

RUUD®

ACHIEVER® 90 PLUS® HIGH EFFICIENCY DOWNFLOW/ HORIZONTAL GAS FURNACES

The Ruud® Achiever® 90 Plus® High Efficiency line of downflow/horizontal gas furnaces are designed for utility rooms, closets, alcoves, attics or crawl spaces. The UGTA is shipped in the downflow configuration and is easily converted for horizontal **left-hand** airflow applications.

The design is certified by CSA.

Features

- Heat exchanger is constructed of all stainless steel for maximum corrosion resistance and thermal fatigue reliability.
- Low profile "34 inch" design is lighter and easier to handle and leaves room for optional accessories.
- Top electrical connections, left or right gas and condensate drainage connections on downflow models.
- Condensate drain for horizontal application provided standard.
- Integrated control board manages all operational functions and provides hookups for humidifier and electronic air cleaner.
- An insulated blower compartment, a slow-opening gas valve and a specially designed inducer system make it one of the quietest furnaces on the market today.
- Pre-paint galvanized steel cabinet.
- Molded permanent filters.
- Optional indoor or outdoor combustion air.
- Transformer and control fuse protection.
- Control board diagnostics.

A variety of cooling coils and plenums designed to use with the Achiever 90 Plus gas furnaces are available as optional accessories for air conditioning models.

†A.F.U.E. (Annual Fuel Utilization Efficiency) calculated in accordance with Department of Energy test procedures.

UGTA- SERIES

Models with Input Rates from 45,000 to 120,000 BTU/HR [13.19 to 35.17 kW]

(All Models 90% A.F.U.E.† or Above)

CERTIFIED

DESIGN CERTIFIED

Accredited by the RvA · ASQ Quality Evaluations, Inc. Management System Certification · ANSI·RAB QMS ACCREDITED

ISO 9002

Certificate Number: 30164

EFFICIENCY RATING CERTIFIED ama

ACHIEVER 90 PLUS HIGH EFFICIENCY DOWNFLOW/HORIZONTAL GAS FURNACE

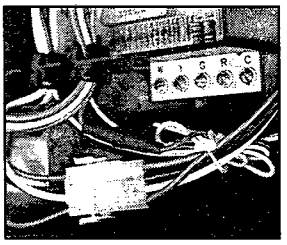
FUSE PROTECTION

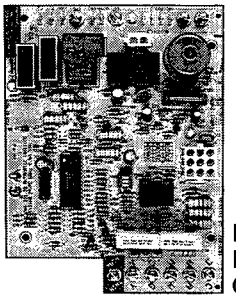
INTEGRATED FURNACE CONTROL

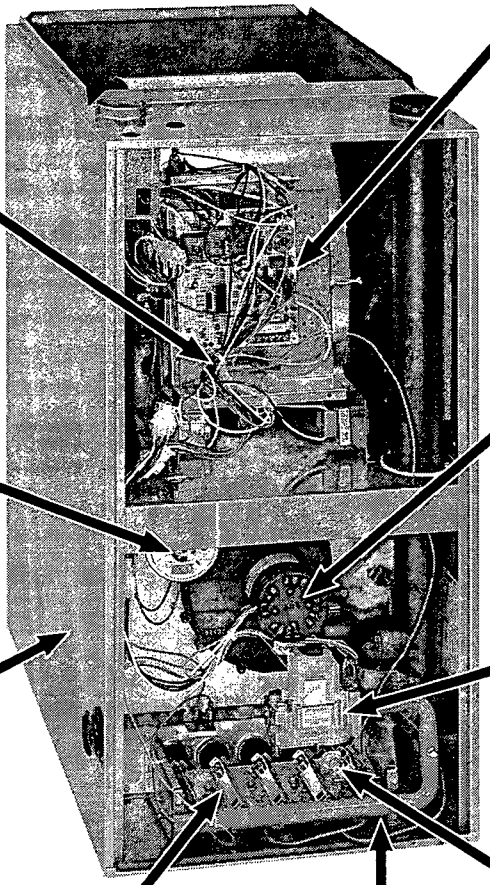

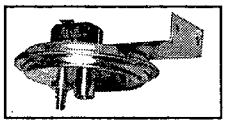
PRESSURE SWITCH

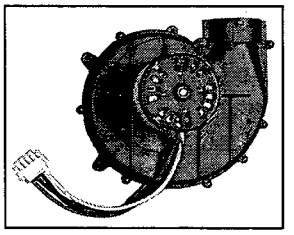
DRAFT INDUCER

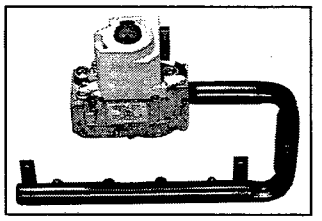
GAS VALVE AND MANIFOLD

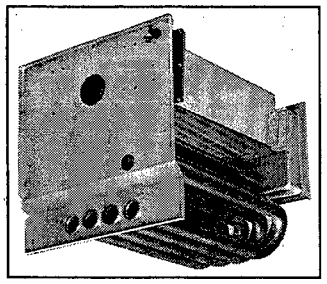
PRIMARY AND SECONDARY HEAT EXCHANGER

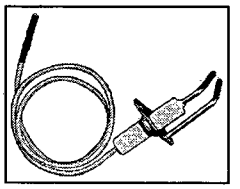
DIRECT SPARK IGNITION

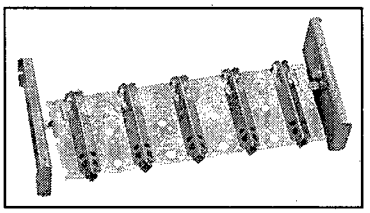
IN-SHOT BURNERS

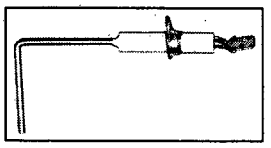
REMOTE SENSOR

STANDARD EQUIPMENT

Completely assembled and wired; heat exchanger; primary: 409 and aluminized 409 stainless steel, secondary: 29-4C stainless steel; induced draft; pressure switch; redundant main gas control; blower compartment door safety switch; solid state time on/off blower control; limit controls; manual shut-off valve; 100% safety lock out; cool fan off delay; field selectable heat fan off delay; one hour automatic retry; power and self-test diagnostics; flame sense current diagnostics; electronic air cleaner connections; twinning (built-in) features; humidifier connections; humidifier on/off delay; low speed continuous fan option; single speed option for heating and cooling applications; transformer; direct drive, multi-speed blower motor. (Please note: a thermostat is not included as standard equipment.)

OPTIONAL EQUIPMENT

NOTE: Furnace is not listed for use with fuels other than natural or L.P. (propane) gas.

All models can be converted by a qualified distributor or local service dealer to use L.P. (propane) gas without changing burners. Factory approved kits must be used to convert from natural to L.P. (propane) gas and may be ordered as optional accessories from a parts distributor.

For L.P. (propane) operation, refer to Conversion Kit Index Form.

WARNING

THIS FURNACE IS NOT APPROVED OR RECOMMENDED FOR USE IN MOBILE HOMES

BEFORE PURCHASING THIS APPLIANCE, READ IMPORTANT ENERGY COST AND EFFICIENCY INFORMATION AVAILABLE FROM YOUR RETAILER.

PHYSICAL DATA AND SPECIFICATIONS DOWNFLOW/HORIZONTAL MODELS U.S. and Canadian Models

MODEL NUMBERS	UTGA-04EMAES	UTGA-06EMAES	UTGA-07EMAES	UTGA-07EYBGS	UTGA-09EZAJS	UTGA-10EZAJS	UTGA-12ERAJS
INPUT-BTU/HR [kW] ①	45,000 [13.19]	60,000 [17.58]	75,000 [21.98]	75,000 [21.98]	90,000 [26.38]	105,000 [30.77]	120,000 [35.17]
HEATING CAPACITY BTU/HR [kW]	41,000 [12.02]	56,000 [16.41]	69,000 [20.22]	69,000 [20.22]	84,000 [24.62]	97,000 [28.43]	112,000 [32.82]
HIGH ALTITUDE INPUT [kW] ②	40,500 [11.87]	54,000 [15.83]	67,500 [19.78]	67,500 [19.78]	81,000 [23.74]	94,500 [27.70]	108,000 [31.65]
HIGH ALTITUDE OUTPUT CAPACITY [kW] ②	37,000 [10.84]	50,400 [14.77]	63,000 [18.46]	63,000 [18.46]	75,000 [21.98]	87,500 [25.64]	100,500 [29.45]
BLOWER (D x W) [mm]	11 x 7 [279 x 178]	11 x 7 [279 x 178]	11 x 7 [279 x 178]	12 x 7 [305 x 178]	12 x 11 [305 x 279]	12 x 11 [305 x 279]	11 x 10 [279 x 254]
MOTOR H.P. [W] SPEEDS-TYPE	1/2 [373]-4-PSC	1/2 [373]-4-PSC	1/2 [373]-4-PSC	3/4 [559]-4-PSC	3/4 [559]-4-PSC	3/4 [559]-4-PSC	3/4 [559]-4-PSC
MOTOR FULL LOAD AMPS	6.8	6.8	6.8	9.5	9.5	9.5	9.5
HEATING SPEED	MED-LO	MED-LO	MED-HI	MED-LO	MED-LO	MED-LO	MED-LO
COOLING SPEED	HIGH	HIGH	HIGH	HIGH	HIGH	HIGH	HIGH
HEAT EXT. STATIC PRESSURE (IN. W.C.) [kPa]	.10 [.025]	.12 [.029]	.12 [.029]	.12 [.029]	.15 [.037]	.20 [.049]	.20 [.049]
RATED EXT. STATIC PRESSURE (IN. W.C.) [kPa]	.50 [.124]	.50 [.124]	.50 [.124]	.50 [.124]	.50 [.124]	.50 [.124]	.50 [.124]
HEATING CFM @ .2" W.C. E.S.P. [L/s]	890 [420]	885 [418]	1060 [500]	1375 [649]	1400 [661]	1425 [673]	1565 [739]
COOLING CFM @ .5" W.C. E.S.P. [L/s]	1220 [576]	1180 [557]	1150 [543]	1625 [767]	1850 [873]	1820 [859]	2040 [963]
TEMPERATURE RISE RANGE °F [°C]	30-60 [16.7-33.3]	40-70 [22.2-38.9]	45-75 [25-41.7]	35-65 [19.4-36.1]	45-75 [25-41.7]	50-80 [27.8-44.4]	50-80 [27.8-44.4]
STANDARD FILTER [mm]	(2) 12" x 20" [305 x 508]	(2) 12" x 20" [305 x 508]	(2) 12" x 20" [305 x 508]	(2) 12" x 20" [305 x 508]	(2) 12" x 20" [305 x 508]	(2) 12" x 20" [305 x 508]	(2) 14" x 20" [356 x 508]
APPROX. SHIPPING WEIGHT (LBS.) [kg]	111	117	123	123	148	152	160
AFUE ③	92.0%	92.4%	92.0%	92.3%	92.4%	92.0%	92.1%
CALIFORNIA SEASONAL EFFICIENCY ③	84.9%	86.8%	86.4%	85.7%	86.7%	87.0%	87.4%

NOTES: All models are 115V, 60HZ, 1Ø. Gas connection size for all models is 1/2" [13 mm] N.P.T.
① See Conversion Kit Index Form for high altitude derate.
② Canadian installations only.
③ In accordance with D.O.E. test procedures.

MODEL IDENTIFICATION

U	G	T	A	—	07E	M	A	E	S
Ruud	Gas Furnace	Downflow/ Horizontal Condensing Gas Furnace	Design Series		Heating Input Designation	Blower Size	Variations	Heat/Cool Designation	Fuel Code

Electric Ignition	Input BTU/HR
04E	45,000 [13 kW]
06E	60,000 [17.6 kW]
07E	75,000 [20.5 kW]
09E	90,000 [26.4 kW]
10E	105,000 [30.7 kW]
12E	120,000 [35.2 kW]

M = 11 x 7 [279 x 178 mm]
R = 11 x 10 [279 x 254 mm]
Z = 12 x 11 [305 x 279 mm]
Y = 12 x 7 [305 x 178 mm]

A = Std.
B = Wide Cabinet

E = 1100-1300 CFM [519-613.5 L/s]
G = 1500-1700 CFM [707.9-802.3 L/s]
J = 1900-2100 CFM [896.7-991.1 L/s]

S = U.S. and Canadian Natural Gas

[ ] Designates Metric Conversions

GENERAL TERMS OF LIMITED WARRANTY

Ruud will furnish a replacement for any part of this product which fails in normal use and service within the applicable period stated, in accordance with the terms of the limited warranty.

For Complete Details of the Limited Warranty, Including Applicable Terms and Conditions, See Your Local Installer or Contact the Manufacturer for a Copy.

Primary and Secondary Heat Exchanger.....Limited Lifetime
*Any Other Part.....Five (5) Years

***This five year limited warranty is applicable only to single-phase products installed in residential applications on or after January 1, 2001.**

DOWNFLOW MODELS

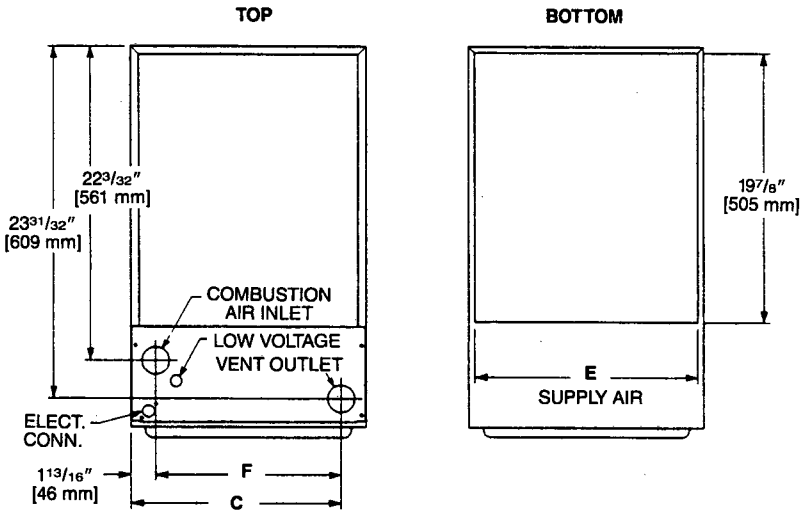

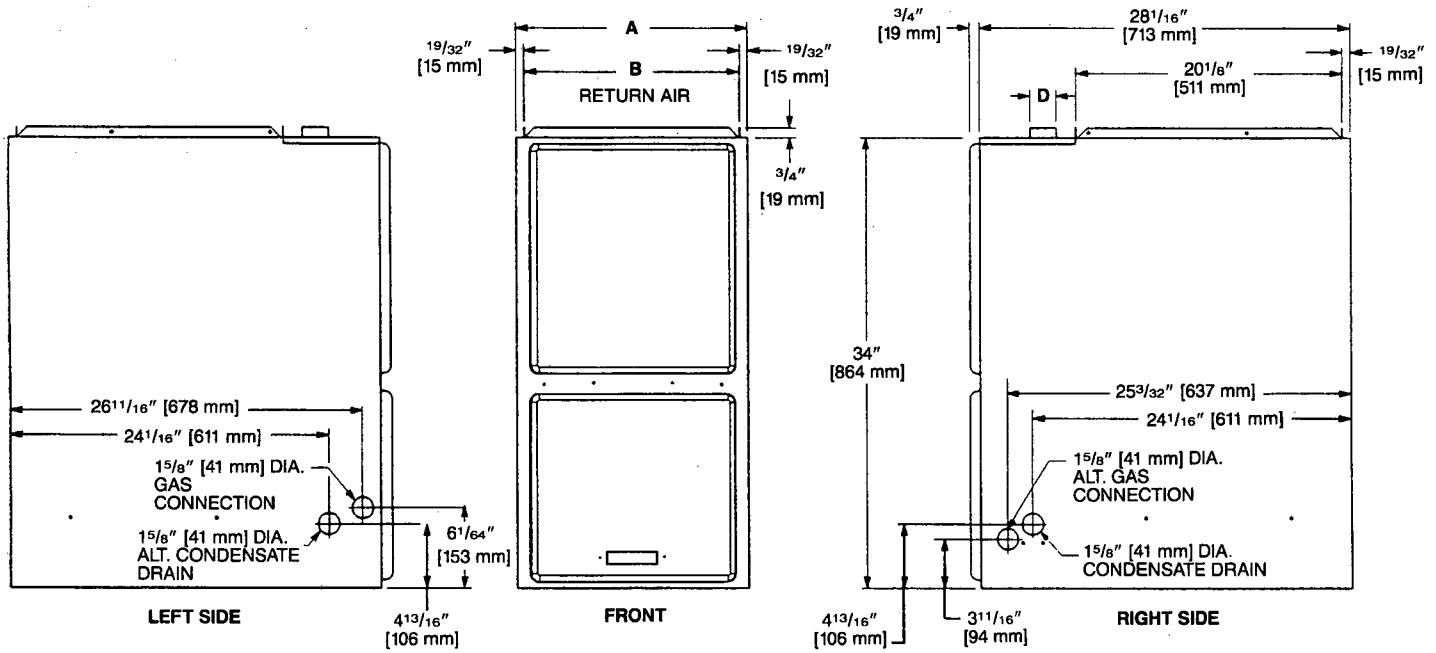

MODEL UGTA-	A	B	C	D	E	F	LEFT SIDE	MINIMUM CLEARANCE (IN.) [mm]					SHIP WGTS. [kg]
								RIGHT SIDE	BACK	TOP	FRONT	VENT	
04	17 1/2 [445]	16 11/32 [415]	15 5/8 [397]	2 [51]	16 5/8 [422]	13 7/8 [352]	0	0	0	1 [25]	2 [51]	0	111 [50]
06	17 1/2 [445]	16 11/32 [415]	15 5/8 [397]	2 [51]	16 5/8 [422]	13 7/8 [352]	0	0	0	1 [25]	2 [51]	0	117 [53]
07EM	17 1/2 [445]	16 11/32 [415]	15 5/8 [397]	2 [51]	16 5/8 [422]	13 7/8 [352]	0	0	0	1 [25]	2 [51]	0	123 [56]
07EY	21 [533]	19 27/32 [504]	19 3/16 [486]	2 [51]	20 1/8 [511]	17 3/8 [441]	0	0	0	1 [25]	2 [51]	0	123 [56]
09	21 [533]	19 27/32 [504]	19 3/16 [486]	2 [51]	20 1/8 [511]	17 3/8 [441]	0	0	0	1 [25]	2 [51]	0	148 [67]
10	21 [533]	19 27/32 [504]	19 3/16 [486]	2 [51]	20 1/8 [511]	17 3/8 [441]	0	0	0	1 [25]	2 [51]	0	152 [69]
12	24 1/2 [622]	23 11/32 [593]	22 5/8 [575]	2 [51]	23 5/8 [600]	20 7/8 [530]	0	0	0	1 [25]	2 [51]	0	160 [73]

IMPORTANT NOTE: Horizontal furnace may be installed for horizontal left hand air supply **ONLY.** The condensate trap provided for horizontal application must be installed in the field beneath the unit as directed in the furnace Installation & Operating Instructions.

HORIZONTAL MODELS

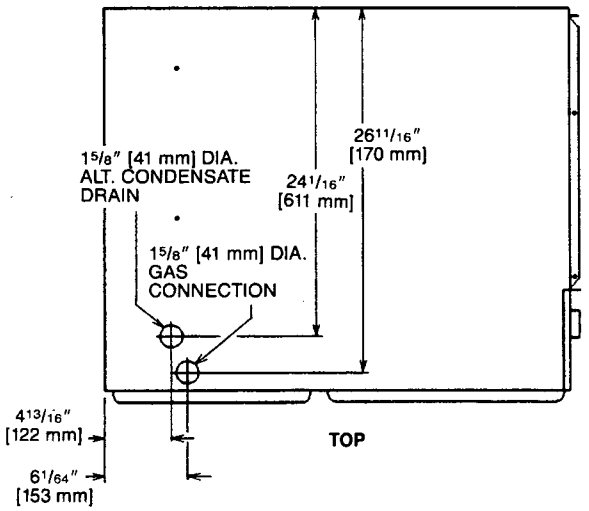

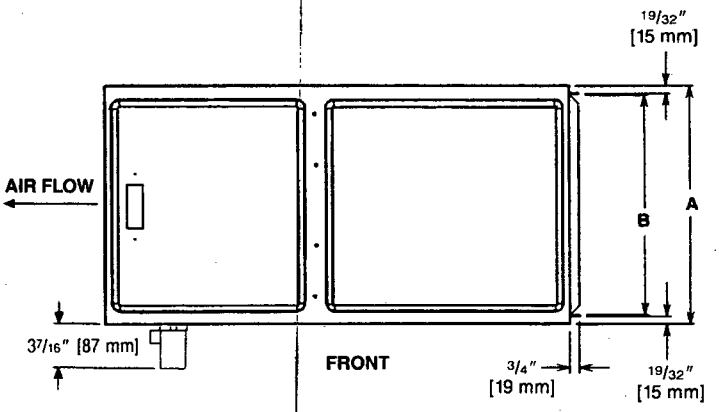

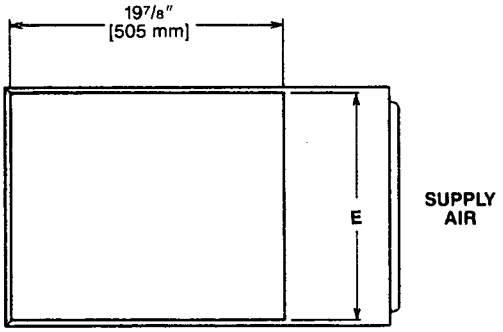

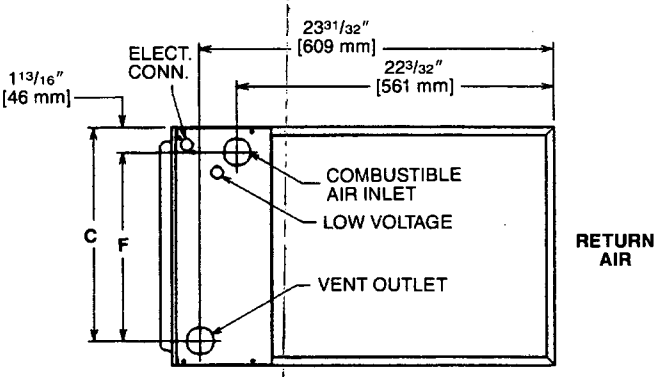

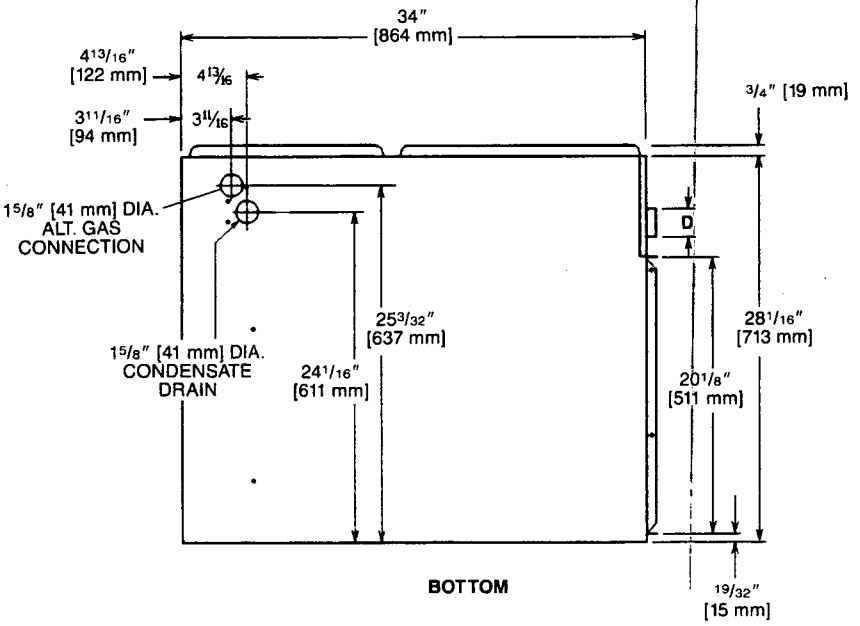

IMPORTANT NOTE: Horizontal furnace may be installed for horizontal left hand air supply **ONLY.** The condensate trap provided for horizontal application must be installed in the field beneath the unit as directed in the furnace Installation & Operating Instructions.

BLOWER PERFORMANCE DATA—UGTA MODELS

MODEL UGTA-	BLOWER SIZE IN. [mm]	MOTOR H.P. [W]	BLOWER SPEED	CFM [L/s] AIR DELIVERY EXTERNAL STATIC PRESSURE INCHES WATER COLUMN [kPa]						
				0.1 [.02]	0.2 [.05]	0.3 [.07]	0.4 [.10]	0.5 [.12]	0.6 [.15]	0.7 [.17]
04	11 x 7 [279 x 178]	1/2 [373]	LOW	820 [387]	790 [373]	760 [359]	725 [342]	690 [326]	650 [306]	610 [288]
			MED-LO	930 [439]	890 [420]	850 [401]	815 [384]	785 [370]	750 [354]	720 [340]
			MED-HI	1150 [543]	1120 [528]	1090 [514]	1045 [493]	1002 [473]	950 [448]	900 [425]
			HIGH	1414 [667]	1365 [644]	1320 [622]	1270 [599]	1220 [576]	1165 [550]	1115 [526]
06	11 x 7 [279 x 178]	1/2 [373]	LOW	795 [375]	760 [359]	730 [344]	695 [328]	660 [311]	615 [290]	570 [269]
			MED-LO	910 [429]	885 [418]	860 [406]	815 [384]	770 [363]	725 [342]	680 [321]
			MED-HI	1115 [526]	1080 [510]	1045 [493]	1005 [474]	965 [455]	920 [434]	875 [413]
			HIGH	1365 [644]	1315 [620]	1270 [600]	1225 [578]	1180 [557]	1125 [531]	1070 [505]
07EM	11 x 7 [279 x 178]	1/2 [373]	LOW	780 [368]	750 [354]	720 [339]	675 [318]	635 [300]	595 [281]	555 [262]
			MED-LO	890 [420]	860 [406]	835 [394]	790 [373]	750 [354]	705 [332]	660 [311]
			MED-HI	1100 [519]	1060 [500]	1025 [484]	980 [462]	940 [443]	890 [420]	845 [399]
			HIGH	1340 [632]	1295 [611]	1250 [590]	1200 [566]	1150 [543]	1090 [514]	1025 [484]
07EY	12 x 7 [305 x 178]	3/4 [559]	LOW	1105 [522]	1095 [517]	1080 [510]	1050 [496]	1030 [486]	1010 [477]	990 [467]
			MED-LO	1290 [609]	1275 [602]	1260 [595]	1220 [576]	1195 [564]	1170 [552]	1140 [538]
			MED-HI	1480 [698]	1435 [677]	1415 [668]	1390 [656]	1370 [647]	1300 [614]	1255 [592]
			HIGH	1705 [805]	1665 [786]	1615 [762]	1570 [741]	1540 [727]	1475 [696]	1400 [661]
09	12 x 11 [305 x 279]	3/4 [559]	LOW	1155 [545]	1125 [531]	1100 [519]	1080 [510]	1060 [500]	1000 [472]	940 [443]
			MED-LO	1420 [670]	1400 [661]	1380 [651]	1365 [644]	1350 [637]	1260 [594]	1175 [554]
			MED-HI	1605 [757]	1575 [743]	1550 [732]	1560 [736]	1570 [740]	1480 [698]	1390 [656]
			HIGH	2005 [946]	1965 [927]	1930 [910]	1890 [892]	1850 [873]	1765 [833]	1680 [793]
10	12 x 11 [305 x 279]	3/4 [559]	LOW	1180 [557]	1150 [543]	1120 [528]	1100 [519]	1080 [510]	1025 [484]	970 [458]
			MED-LO	1460 [689]	1425 [672]	1390 [656]	1375 [649]	1360 [642]	1280 [604]	1200 [566]
			MED-HI	1680 [793]	1645 [776]	1615 [762]	1585 [748]	1560 [736]	1490 [703]	1420 [670]
			HIGH	2055 [970]	2000 [944]	1940 [915]	1880 [887]	1820 [859]	1745 [823]	1675 [790]
12	11 x 10 [279 x 254]	3/4 [559]	LOW	1285 [606]	1250 [590]	1215 [573]	1235 [582]	1260 [595]	1230 [580]	1200 [566]
			MED-LO	1590 [750]	1565 [738]	1540 [727]	1505 [710]	1475 [696]	1425 [672]	1375 [649]
			MED-HI	1840 [868]	1820 [860]	1800 [850]	1750 [826]	1700 [802]	1645 [776]	1590 [750]
			HIGH	2315 [1093]	2250 [1062]	2185 [1031]	2110 [996]	2040 [963]	1965 [927]	1890 [892]

ACCESSORIES—DOWNFLOW

VENT TERMINATION KITS

CONCENTRIC: Vertical/Horizontal = RXGY-E03
Horizontal = RXGY-C01

HORIZONTAL TWO PIPE: RXGY-D02, RXGY-D03, RXGY-D04

CONDENSATE PUMP KIT: RXGY-B01

NEUTRALIZER KIT: RXGY-A01

PLENUM DATA FOR "A" COILS

Plenum adapters are required in some instances for use on downflow applications when plenum and furnace size do not match.

FURNACE WIDTH IN. [mm]	PLENUM WIDTH IN. [mm]	PLENUM ADAPTER DOWNFLOW	COIL PLENUM
17 1/2 [445]	16 1/4 [413]	RXAA-C186	RXAL-B16BU
17 1/2 [445]	20 1/4 [514]	RXAA-C173	RXAL-B20BU
17 1/2 [445]	21 5/8 [549]	RXAA-C187	RXAL-B21BU
17 1/2 [445]	25 1/4 [641]	RXAA-C174	RXAL-B25BU
21 [533]	25 1/4 [641]	RXAA-C175	RXAL-B25BU
21 [533]	22 1/4 [565]	RXAA-C176	RXAL-B22BU
21 [533]	21 5/8 [549]	RXAA-C188	RXAL-B21BU
24 1/2 [622]	25 1/4 [641]	RXAA-C177	RXAL-B25BU
24 1/2 [622]	21 5/8 [549]	RXAA-C187	RXAL-B21BU

Note: See Form Number C22-206 for MultiFlex® coil data.

[ ] Designates Metric Conversions

FOSSIL FUEL KIT: RXPF-F01
RXPF-F02 (TVA)

***HIGH ALTITUDE KIT:** RXGY-F04-105 MBH
RXGY-F05-120 MBH
RXGY-F06-45/60/90 MBH
RXGY-F07-75 MBH

***For installations over 5000 ft.**
Includes orifices required on furnaces 8,001 ft. and above.

OPTION CODE FOR HIGH ALTITUDE: US-278
Canada-298

COMBUSTIBLE FLOOR BASE: RXGC-B17
RXGC-B21
RXGC-B24

EXTERNAL FILTER RACK: RXGF-CC

FILTER RACK FILTER SIZES* INCHES [mm]	
MODEL UGTA-	RXGF-CC
04	(2) 12 x 20 [305 x 508]
06	(2) 12 x 20 [305 x 508]
07	(2) 12 x 20 [305 x 508]
09	(2) 12 x 20 [305 x 508]
10	(2) 12 x 20 [305 x 508]
12	(2) 14 x 20 [305 x 508]

*Filter racks are shipped without filters.
Filters shipped with furnace may be used or a suitable 1" [25.4 mm] filter.

NOTES

Before proceeding with installation, refer to installation instructions packaged with each model, as well as complying with all Federal, State, Provincial, and Local codes, regulations, and practices.

RUUD
AIR CONDITIONING
DIVISION

5600 Old Greenwood Road, Fort Smith, Arkansas 72908

"In keeping with its policy of continuous progress and product improvement, Ruud reserves the right to make changes without notice."

PRINTED IN U.S.A. 1-02 DC

FORM NO. G22-452 REV. 5
Supersedes Form No. G22-452 Rev. 4

NJ UCCARS5.24E

TOWNSHIP OF BRICK
401 CHAMBERS BRIDGE RD
DIVISION OF INSPECTIONS

UCC NEW JERSEY
ELECTRICAL
SUBCODE
TECHNICAL SECTION

Date Received 08/29/2003
Date Issued 9/18/03
Control # C04-27
Permit # 03-4157

A. IDENTIFICATION-APPLICANT: COMPLETE ALL APPLICABLE INFORMATION. WHEN CHANGING CONTRACTORS. NOTIFY THIS OFFICE. CALL UTILITY DIG NO: 1-800-272-1000

Block 827 Lot 27 Qual
Work Site Location 1629 ROUTE 88 EAST
ELECTRIC TO GAS
Owner in Fee SCHMIDT, ERICA
Address PO BOX V
BRICK, NJ -
Tele [redacted]
Contractor EXTREME AIR HTG & COOLING LLC
Address 133 SAWMILL RD
BRICK, NJ 08724-
Tele.(732)803-5992
Lic. No. or Bldrs. Reg. No.
Federal Emp. No. 55-0796374

B. ELECTRICAL CHARACTERISTICS

Use Group - Present R-5 Proposed R-5
[ ] Pole/Pad # [ ] Temporary [ ] Other
Building Occupied as Utility Co.
Estimated Cost of Electrical Work $ 350

JOB SUMMARY (Office Use Only)

PLAN REVIEW
[X] No Plans Required
Joint Plan Review Required:
[ ] Bldg [ ] Plumb
[ ] Fire [ ] Elevator
[ ] Elect Plans Approved
Date: 9 10 03
Approved By:

SUBCODE APPROVAL
[ ] CO [ ] CCO [ ] CA
Date:
Approved By:

INSPECTIONS Type	Dates (Month/Day) Failure	Failure	Approval	Initial
Rough				
Temp Serv				
Const Serv				
TCO				
Other				
Service				
Final				

Temp. Cut-in-Card Date Issued
Final Cut-in-Card Date Issued

D. TECHNICAL SITE DATA

NO.	SIZE	ITEM	FEE (Office Use Only)
0		Lighting Fixtures	
1		Receptacles	
2		Switches	
0		Detectors	
0		Light Poles	
0		Motors-Fract HP	
0		Emergency & Exit Lights	
0		Communications Points	
0		Alarm Devices/F.A.C. Panel	
3		TOTAL NUMBERS	35
0		Pool Permit/with UW Lights	0
0		Storable Pool/Spa/Hot Tub	0
0	0	KW Elect Range/Receptacle	0
0	0	KW Oven/Surface Unit	0
0	0	KW Elect Water Heater	0
0	0	KW Elect Dryer/Receptacle	0
0	0	KW Dishwasher	0
0	0	HP Garbage Disposal	0
1	7	KW Central A/C Unit	9
1	3	HP/KW Space Heater/Air Handler	9
0	0	Baseboard Heat	0
0	0	HP Motors 1/+ HP	0
0	0	KW Transformer/Generator	0
0	0	AMP Service	0
0	0	AMP Subpanels	0
0	0	AMP Motor Control Center	0
0	0	KW Elect Sign/Outline Light	0
		Other	0
		Other	0

C. CERTIFICATION IN LIEU OF OATH

I hereby certify that I am the (agent of) owner of record and am authorized to make this application and perform the work listed on this application.

Applicant's Signature/Contractor's Seal and Signature
[ ] Licensed Electrical Contractor [ ] Exempt Applicant

Administrative Surcharge $ 0
Paid [ ] Check # Minimum Fee $ 0
Collected by: TOTAL FEE $ 53
DCA State Permit Fee $ 0

U.C.C. F120 (rev. 3/96)

NJ UCCARS5.24E

TOWNSHIP OF BRICK
401 CHAMBERS BRIDGE RD
DIVISION OF INSPECTIONS

UCC NEW JERSEY
ELECTRICAL
SUBCODE
TECHNICAL SECTION

Date Received 08/29/2003
Date Issued 9/18/03
Control # C04-27
Permit # 03-4157

A. IDENTIFICATION-APPLICANT: COMPLETE ALL APPLICABLE INFORMATION. WHEN CHANGING CONTRACTORS. NOTIFY THIS OFFICE. CALL UTILITY DIG NO: 1-800-272-1000

Block 827 Lot 27 Qual
Work Site Location 1629 ROUTE 88 EAST
ELECTRIC TO GAS
Owner in Fee SCHMIDT, ERICA
Address PO BOX V
BRICK, NJ -
Tele [redacted]
Contractor [redacted]R HTG & COOLING LLC
Address 133 SAWMILL RD
BRICK, NJ 08724-
Tele.(732)803-5992
Lic. No. or Bldrs. Reg. No.
Federal Emp. No. 55-0796374

B. ELECTRICAL CHARACTERISTICS

Use Group - Present R-5 Proposed R-5
[ ] Pole/Pad # [ ] Temporary [ ] Other
Building Occupied as Utility Co.
Estimated Cost of Electrical Work $ 350

JOB SUMMARY (Office Use Only)

PLAN REVIEW
[X] No Plans Required
Joint Plan Review Required:
[ ] Bldg [ ] Plumb
[ ] Fire [ ] Elevator
[ ] Elect Plans Approved
Date: 9 10 03
Approved By:

SUBCODE APPROVAL
[ ] CO [ ] CCO [ ] CA
Date:
Approved By:

INSPECTIONS Type	Dates (Month/Day) Failure	Failure	Approval	Initial
Rough				
Temp Serv				
Const Serv				
TCO				
Other				
Service				
Final				

Temp. Cut-in-Card Date Issued
Final Cut-in-Card Date Issued

D. TECHNICAL SITE DATA

NO.	SIZE	ITEM	FEE (Office Use Only)
0		Lighting Fixtures	
1		Receptacles	
2		Switches	
0		Detectors	
0		Light Poles	
0		Motors-Fract HP	
0		Emergency & Exit Lights	
0		Communications Points	
0		Alarm Devices/F.A.C. Panel	
3		TOTAL NUMBERS	35
0		Pool Permit/with UW Lights	0
0		Storable Pool/Spa/Hot Tub	0
0	0	KW Elect Range/Receptacle	0
0	0	KW Oven/Surface Unit	0
0	0	KW Elect Water Heater	0
0	0	KW Elect Dryer/Receptacle	0
0	0	KW Dishwasher	0
0	0	HP Garbage Disposal	0
1	7	KW Central A/C Unit	9
1	3	HP/KW Space Heater/Air Handler	9
0	0	Baseboard Heat	0
0	0	HP Motors 1/+ HP	0
0	0	KW Transformer/Generator	0
0	0	AMP Service	0
0	0	AMP Subpanels	0
0	0	AMP Motor Control Center	0
0	0	KW Elect Sign/Outline Light	0
		Other	0
		Other	0

C. CERTIFICATION IN LIEU OF OATH

I hereby certify that I am the (agent of) owner of record and am authorized to make this application and perform the work listed on this application.

Applicant's Signature/Contractor's Seal and Signature
[ ] Licensed Electrical Contractor [ ] Exempt Applicant

Administrative Surcharge $ 0
Paid [ ] Check # Minimum Fee $ 0
Collected by: TOTAL FEE $ 53
DCA State Permit Fee $ 0

U.C.C. F120 (rev. 3/96)