PRELIMINARY & FINAL – MAJOR SITE PLAN
NEW BEGINNINGS CHRISTIAN FELLOWSHIP, INC.

LOT 88, BLOCK 42

HOWELL TOWNSHIP
MONMOUTH COUNTY, NEW JERSEY

GENERAL NOTES

1. PROPERTY BEING KNOWN AND DESIGNATED AS LOT 88, BLOCK 42 AS SHOWN ON THE HOWELL TOWNSHIP TAX MAP SHEET NO. 10.
2. OWNER/APPLICANT: NEW BEGINNINGS CHRISTIAN FELLOWSHIP, INC. 228 BRICK BOULEVARD, 2nd FLOOR BRICK, NJ 08723 CONTACT: REVEREND J. SOURCE
3. OUTBOUND AND TOPOGRAPHIC SURVEY INFORMATION BASED ON A MAP ENTITLED, "BOUNDARY & TOPOGRAPHIC SURVEY, LOT 88, BLOCK 42, TOWNSHIP OF HOWELL, MONMOUTH COUNTY, NEW JERSEY" PREPARED BY CREST ENGINEERING ASSOCIATES, INC., DATED 4/6/05. ELEVATIONS BASED ON USGS DATUM NGVD 1929. HORIZONTAL DATUM: NAD 83
4. THE PURPOSE OF THIS PLAN IS TO CREATE A HOUSE OF WORSHIP CONSISTING OF 15,000 S.F. BUILDING. THE PROPOSED BUILDING IS TO BE SERVICED BY PRIVATE WELL AND SEPTIC SYSTEM.
5. TO OUR KNOWLEDGE NO UNDERGROUND STORAGE TANKS OR HAZARDOUS MATERIALS EXIST ON SITE. SHOULD ANY HAZARDOUS MATERIALS BE FOUND DURING CONSTRUCTION, THE APPROPRIATE ACTION SHALL BE TAKEN IN ACCORDANCE WITH FEDERAL, STATE, COUNTY AND TOWNSHIP REGULATIONS.
6. ALL CONSTRUCTION TO BE IN ACCORDANCE WITH THE APPLICABLE AUTHORITY, INCLUDING BUT NOT LIMITED TO MONMOUTH COUNTY RULES AND REGULATIONS, HOWELL TOWNSHIP LAND USE ORDINANCE AND GENERAL ORDINANCES, THE N.J.D.E.P. RULES AND REGULATIONS AND THE BOCA CODE, LATEST REVISIONS OF ALL.
7. ALL PROPOSED CURB INLETS TO HAVE BICYCLE SAFE GRATES. ALL INLETS TO BE N.J.D.O.T. TYPE 'B' INLETS IN CURB AREAS, AND TYPE 'E' INLETS IN LAWN/STONE AREAS, UNLESS OTHERWISE NOTED.
8. SOLID WASTE MANAGEMENT WILL BE PROVIDED VIA ENCLOSED DUMPSTER. PICKUPS ARE TO BE BY A PRIVATE HAULER.
9. PROPOSED UTILITIES ARE TO BE INSTALLED UNDERGROUND.
10. THE RESPONSIBILITY AND MAINTENANCE OF THE STORMWATER BMPs INCLUDING UNDERGROUND STORAGE SYSTEM, DETENTIONS BASIN AND STORMWATER CONVEYANCE SYSTEM SHALL BE THE OWNERS OR SUCCESSORS OF THE PROPERTY.
11. FRESHWATER WETLANDS L.O.I. HAS BEEN APPROVED BY N.J.D.E.P. ON MAY 3, 2006 FOR THE WETLANDS LINE SHOWN ON THESE PLANS UNDER FIL #1319-03-0010.1, ACTIVITY NO. FWW050001.
12. THE PROJECT SITE IS WITHIN ZONE C (AREAS OF MINIMAL FLOODING) BASED ON FLOOD INSURANCE RATE MAP FOR HOWELL TOWNSHIP, NEW JERSEY. COMMUNITY NO. 340301 0029B. REVISED TO JANUARY 6, 1983.
13. CONTRACTOR SHALL NOTIFY CREST ENGINEERING ASSOCIATES INC., IF ANY FIELD CONDITIONS ENCOUNTERED DIFFER MATERIALLY FROM THOSE REPRESENTED ON THESE PLANS, AND/OR IF SUCH CONDITIONS, IN THE CONTRACTOR'S OPINION, WOULD RENDER THE DESIGNS SHOWN ON THESE PLANS INAPPROPRIATE OR INEFFECTIVE.
14. THE DEVELOPER SHALL OBTAIN A LETTER OF FINAL ACCEPTANCE FROM THE MONMOUTH COUNTY ENGINEER FOR ALL ROAD AND DRAINAGE IMPROVEMENTS ALONG COUNTY ROAD PRIOR TO THE RELEASE OF ANY BOND OR OTHER FINANCIAL SURETY POSTED WITH THE MUNICIPALITY FOR THE COMPLETION OF SAID IMPROVEMENTS.
15. ALL CONSTRUCTION MATERIALS SHALL CONFORM TO HOWELL TOWNSHIP SPECIFICATIONS AS STATED IN THE LAND USE ORDINANCE.
16. ALL TRAFFIC CONTROL SIGNAGE AND STRIPING SHALL CONFORM TO THE MANUAL OF UNIFORM TRAFFIC CONTROL DEVICES, LATEST REVISION, PUBLISHED BY THE USDOT.
17. ALL CONSTRUCTION SHALL COMPLY WITH THE CURRENT RULES AND REGULATIONS OF THE HTMUD, NJDEP, OCUA, MRRSA, MONMOUTH COUNTY BOARD OF HEALTH AND ALL OTHER APPLICABLE REGULATORY AGENCIES.
18. ALL DISTURBED AREAS ARE TO BE GRADED AT A MINIMUM OF 2 %.
19. LOCATION OF STOCKPILES TO BE DETERMINED AT THE TIME OF CONSTRUCTION. STOCKPILES WILL BE STABILIZED IN ACCORDANCE WITH SOIL EROSION AND SEDIMENT CONTROL STANDARDS OF NEW JERSEY.
20. THE APPLICANT IS REQUIRED TO MAINTAIN ALL TEMPORARY SOIL EROSION AND SEDIMENT CONTROL MEASURES THROUGHOUT THE CONSTRUCTION PROJECT . SAID MAINTENANCE SHALL INCLUDE, BUT NOT BE LIMITED TO THE CLEANING AND RE-ESTABLISHMENT OF SEDIMENT CONTROL BARRIERS , SILT FENCING , INLET PROTECTION, ETC. , WHERE DETERMINED TO BE NECESSARY BY THE FREEHOLD SOIL CONSERVATION DISTRICT AND/OR TOWNSHIP ENGINEER.
21. ALL EXISTING AND PROPOSED EASEMENTS ARE SHOWN ON ALL PLANS AND PROFILE SHEETS. EXISTING STREAM ALSO SHOWN ON ALL PLAN AND PROFILE SHEETS.
22. TELEPHONE, ELECTRIC AND GAS SERVICE TO BE PROVIDED BY TIE-IN TO EXISTING SERVICES IN EXISTING LAKEWOOD-ALLENWOOD ROAD R.O.W.
23. LENGTH OF PIPE FOR STORM SEWER IS FROM CENTERLINE OF STRUCTURE TO CENTERLINE OF STRUCTURE, UNLESS OTHERWISE INDICATED.
24. STORM SEWER PIPE TO BE CLASS IV R.C.P., UNLESS OTHERWISE INDICATED.
25. PROPOSED LIGHTING LEVELS AROUND PROPOSED BUILDING AND PARKING AREAS SHALL MEET LEVELS REQUIRED BY THE TOWNSHIP OF HOWELL.

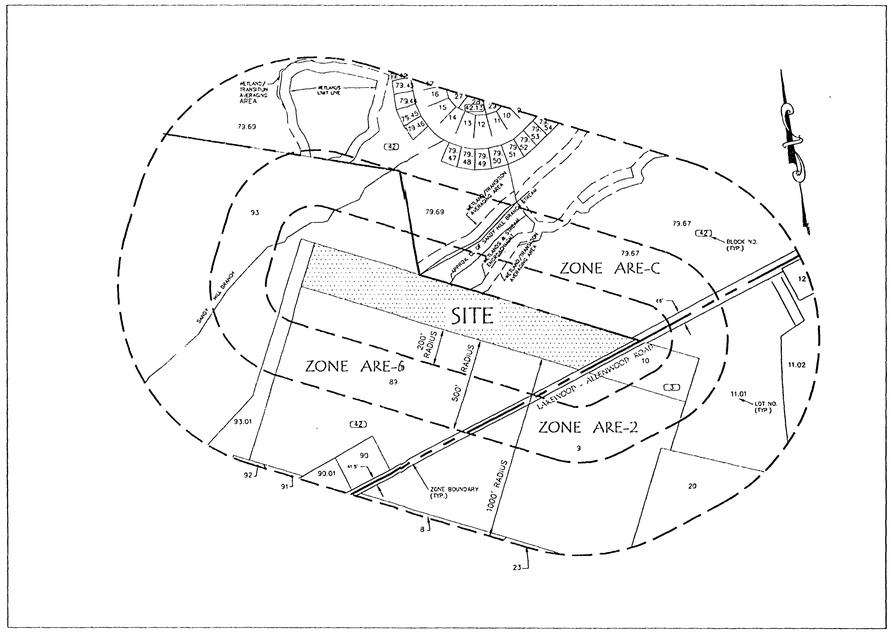

KEY MAP 1" = 400'

GRAPHIC SCALE

400 0 200 400 800 1200

(IN FEET)
1 inch = 400 ft.

PROPERTY OWNERS WITHIN 200'

BLOCK	LOT	OWNER
3	9	EDWARD C. BRITTON JR.
	10	JAMES S. JR. & ROSE ROTUNDO
	11.01	CHURCH OF ST WILLIAM THE ABBOTT
42	79.67	TOWNSHIP OF HOWELL
	79.69	TOWNSHIP OF HOWELL
	88	NEW BEGINNINGS CHRISTIAN FELLOWSHIP
	89	EDWARD C. BRITTON JR.
	93	COUNTY OF MONMOUTH HALL OF RECORDS
	93.01	COUNTY OF MONMOUTH HALL OF RECORDS

OUTSIDE AGENCIES TO BE NOTIFED:

- PUBLIC SERVICE ELECTRIC & GAS COMPANY, MANAGER – CORPORATE PROPERTIES, 80 PARK PLAZA, T6B,NEWARK, NJ 07102
- HOWELL SEWER UTILITIES, P.O. BOX 580, HOWELL, NJ 07731
- AQUA NEW JERSEY, 10 BLACK FOREST ROAD, HAMILTON, NJ 08691
- NEW JERSEY-AMERICAN WATER COMPANY, 500 GROVE STREET, HADDON HEIGHTS, NJ 08035
- PARKWAY WATER CO., P.O. BOX 145, MARLBORO, NJ 07746
- MONMOUTH COUNTY PLANNING BOARD, MAIN STREET, HALL OF RECORDS ANNEX, FREEHOLD, NJ 07728

OUTSIDE AGENCY APPROVALS REQUIRED:

- MONMOUTH COUNTY PLANNING BOARD, MAIN STREET, HALL OF RECORDS ANNEX, FREEHOLD, NJ 07728
- FREEHOLD SOIL CONSERVATION DISTRICT, 4000 KOZLOSKI ROAD, FREEHOLD, NJ 07728
- NJDEP – LAND USE REGULATION PROGRAM – STREAM ENCROACHMENT PERMIT, P.O. BOX 439, TRENTON, NJ 08625-0439
- MONMOUTH COUNTY BOARD OF HEALTH

ZONE TABULATION

TRACT IS LOCATED ENTIRELY IN THE ARE-6– AGRICULTURAL RURAL ESTATE ZONE
PROPOSED HOUSE OF WORSHIP IS A CONDITIONAL USE IN ARE-6 ZONE

ITEM	REQUIRED (COND. USE) *	REQUIRED (ARE-6 ZONE)	PROVIDED
MIN. LOT AREA	5 ACRES	6 ACRES	9.56 ACRES (416,303 S.F.)
MIN. LOT FRONTAGE	200 FT.	200 FT.	340.35 FT.
MIN. SIDE YARD SETBACK	1 x BUILDING HEIGHT BUT NOT LESS THAN 30 FT.	50 FT.	> 50 FT.
MIN. FRONT YARD SETBACK	75 FT OR 2 x BUILDING HEIGHT, WHICHEVER IS GREATER	50 FT.	> 75 FT.
MIN. REAR YARD SETBACK	N/A	40 FT.	> 40 FT.
MIN. BUILDING COVERAGE	20%	N/A	3.6% (15,000 S.F.)
MAX. IMPERVIOUS SURFACE COVERAGE	50%	N/A	14.65%
MAX. BUILDING HEIGHT	N/A	30 FT. AND 2-1/2 STORIES, WHICHEVER IS LESS	30 FT. MAX.
ACCESSORY BLDG. LOCATION	N/A	SIDE AND REAR YARDS SHALL EQUAL BLDG. HEIGHT	N/A

* – REQUIREMENTS PER CONDITIONAL USE SECTION 188-92 (HOUSES OF WORSHIP)

NO VARIANCES ARE REQUIRED

PARKING REQUIREMENTS	REQUIRED	PROVIDED
1. PARKING SIZE	9'x19'	9'x19' (MIN.)
2. NO. PARKING SPACES – CHURCH	1 SPACE/3 SEATS 240 SEATS/3 = 80 SPACES	84 SPACES (INCLUDES 4 H.C. SPACES)
LOADING/UNLOADING	**REQUIRED**	**PROVIDED**
CHURCH	0	1 AT 10'x60'
SIGNS	**PERMITTED**	**PROVIDED**
1 (ONE)	4 S.F.	66.33 S.F. **

** VARIANCE REQUIRED FOR SIGN SIZE AND HEIGHT (SECTION 256-4A)

NOTE: TOTAL BUILDING COVERAGE PROVIDED = 15,000 S.F. (0.344 Ac.)

DESIGN WAIVER/VARIANCE:
1. 2,000 FT. DOWNSTREAM ANALYSIS PROVIDED VS. ANALYSIS TO TOWNSHIP LIMIT IS REQUIRED
2. SECTION 188-63A – 50 FT. WDE BUFFER NOT PROVIDED AROUND THE PERIMETER OF SITE ON LOTS IN EXCESS OF ONE ACRE.
3. SECTION 188-106B – PROPOSED PARKING SPACES HAVE DIRECT ACCESS FROM A MAJOR INTERIOR DRIVE.
4. SECTION 188-7 – DRIVEWAY ENTRANCE, SEPTIC FIELD, GRADING OPERATIONS AND A DETENTION BASIN WITHIN THE FIFTY FOOT PERIMETER TREE BUFFER AREA PROVIDED.

INDEX OF SHEETS

1. COVER & INDEX SHEET
2. BOUNDARY & TOPOGRAPHIC SURVEY
3. EXISTING CONDITIONS AND WOODLANDS MANAGEMENT PLAN
4. OVERALL DEVELOPMENT PLAN
5. GRADING & UTILITY PLAN/SOIL EROSION & SEDIMENT CONTROL PLAN
6. LANDSCAPE PLAN
7. LIGHTING PLAN
8. LAKEWOOD-ALLENWOOD ROAD PROFILE AND CROSS-SECTIONS
9. SANDY HILL BROOK CROSS SECTIONS
10. SANDY HILL BROOK CROSS SECTIONS & PROFILE
11. DETAIL SHEET/SOIL EROSION & SEDIMENT CONTROL NOTES & DETAILS
12. DETAILS
13. STORMTECH DETAILS

New Beginnings
SEP 14 2007
SP893
LDS HW-PZ 10602016

I HAVE REVIEWED THIS SITE PLAN AND CERTIFY THAT IT MEETS ALL CODES AND ORDINANCES UNDER THAT JURISDICTION.

DATE MUNICIPAL ENGINEER

I HEREBY CERTIFY THAT I HAVE PREPARED THE SITE PLAN AND THAT ALL DIMENSIONS AND INFORMATION THEREON DEPICTED IS CORRECT.

MICHAEL B. INTILE, PROFESSIONAL ENGINEER LICENSE NO. 35271

PATRICIA BECCU A-SHOULDICE
NOTARY PUBLIC OF NEW JERSEY
My Commission Expires December 29, 2010

I HEREBY CERTIFY THAT ALL THE REQUIRED IMPROVEMENTS HAVE BEEN INSTALLED OR A BOND POSTED IN COMPLIANCE WITH ALL APPLICABLE CODES AND ORDINANCES (IF IMPROVEMENTS INSTALLED)

DATE IF BOND POSED MUNICIPAL ENGINEER

DATE BUILDING PERMIT ISSUED BOROUGH CLERK

THIS PLAN WAS APPROVED BY THE HOWELL TOWNSHIP PLANNING BOARD

PRELIMINARY _____

FINAL _____

CHAIRMAN DATE SIGNED

SECRETARY DATE SIGNED

NO	DESCRIPTION	DATE	D/C
3.	REV. PER BROSALL LTR OF 4/4/07 & CME LTR OF 11/28/06	6/12/07	UKH
2.	REV. PER C.M.E. LETTER OF 8/17/06	10/25/06	PS
1.	REV. PER NJDEP LETTER OF 7/25/06; FSCD LETTER OF 7/28/06	8/29/06	PS

CREST
Engineering Associates Inc.
Civil & Environmental Engineers
Professional Planners, Surveyors, Landscape Architects
• CERTIFICATE OF AUTHORIZATION NO. 24GA27989300 •
100 RIKE DRIVE, MILLSTONE TOWNSHIP, ENGLISHTOWN, N.J. 07726, PH.(609)448-5550
12 ROBBINS PKWY., 15 WATER STREET, OCEAN BEACH, N.J. 08751, PH.(732)244-0888
MICHAEL B. INTILE
PROFESSIONAL ENGINEER LIC. NO. 35271

DATE	1/16/05
SCALE	1"=200'
DRAWN	PS
CHECKED	MBI
SHEET	1 OF 13
POCKET	

PRELIMINARY AND FINAL MAJOR SITE PLAN
LOT 88
BLOCK 42
HOWELL TOWNSHIP
MONMOUTH COUNTY, NJ

FILE N-4749

COVER & INDEX SHEET

DWG. NO.
CAD FILE: X-PRELIM.dwg
XREF:

K:\4749\4749cover.dwg, 9/4/2007 3:55:24 PM, pat

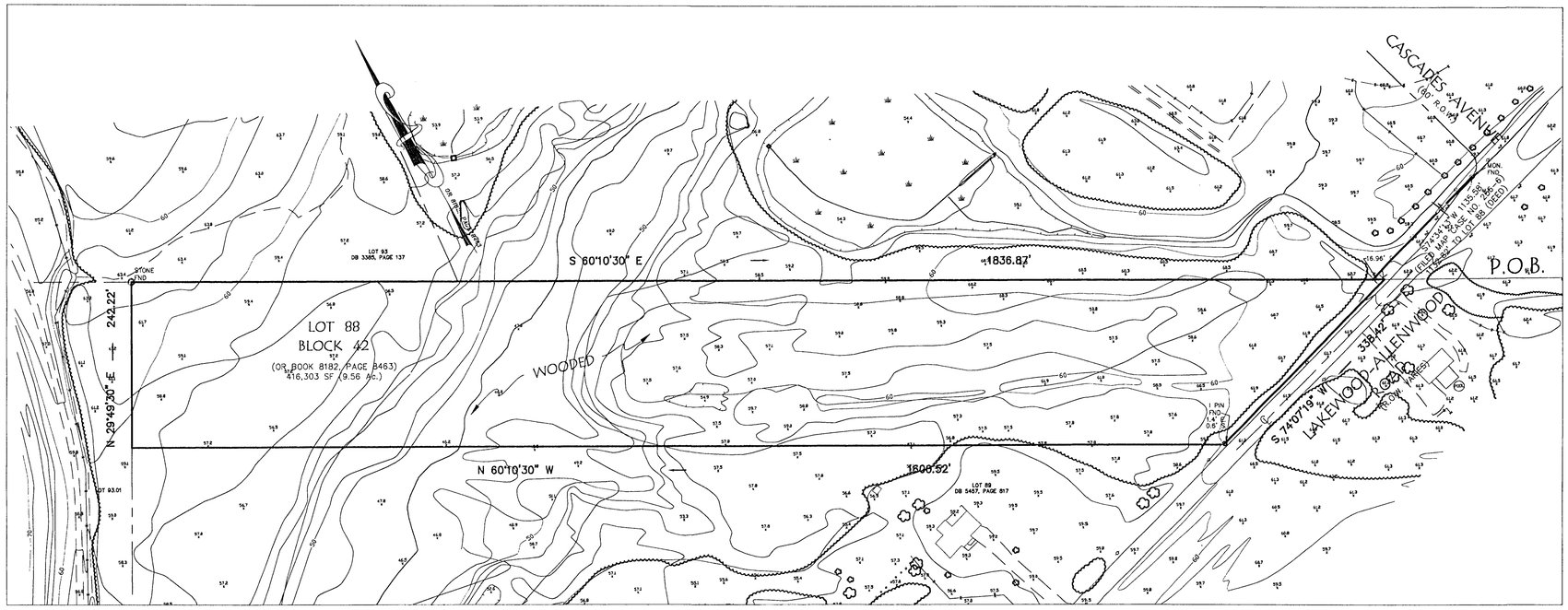

I CERTIFY THAT , TO THE BEST OF MY KNOWLEDGE AND BELIEF , THIS MAP OR PLAN IS THE RESULT OF A FIELD SURVEY MADE ON 4/6/05 , BY ME OR UNDER MY DIRECT SUPERVISION , IN ACCORDANCE WITH THE RULES AND REGULATION PROMULGATION BY THE " STATE BOARD OF PROFESSIONAL ENGINEERS AND LAND SURVEYORS "

THE INFORMATION SHOWN HEREON CORRECTLY REPRESENTS THE CONDITIONS FOUND AT , AND AS OF THE DATE OF THE FIELD SURVEY , EXCEPT SUCH IMPROVEMENTS OR EASEMENTS , IF ANY BELOW THE SURFACE AND NOT VISIBLE .

THIS CERTIFICATION IS GIVEN SOLELY TO THE ABOVE NAMED PARTIES EXCEPT AS FOLLOWS :

A . TO THE TITLE INSURER SO THAT IT MAY INSURE TITLE TO THE PREMISES SHOWN HEREON:

B . TO THE MORTGAGE HOLDER , THE CERTIFICATION SHALL SURVIVE TO ITS SUCCESSORS OR ASSIGNS :

CAUTION : IF THIS DOCUMENT DOES NOT CONTAIN A RAISED IMPRESSION SEAL OF THE PROFESSIONAL , IT IS NOT AN AUTHORIZED ORIGINAL DOCUMENT AND MAY HAVE BEEN ALTERED.

NOTES :

1 . THIS CERTIFICATION IS MADE ONLY TO HEREON NAMED PARTIES FOR PURCHASE AND OR MORTGAGE OF HEREIN DELINEATED PROPERTY BY THE NAME PURCHASER , NO RESPONSIBILITY OR LIABILITY IS ASSUMED BY SURVEYOR FOR USE OF SURVEY FOR ANY OTHER PURPOSE INCLUDING , BUT NOT LIMITED TO USE OF SURVEY FOR SURVEY AFFIDAVIT , RESALE OF PROPERTY , OR TO ANY OTHER PERSON NOT LISTED IN CERTIFICATION EITHER DIRECTLY OR INDIRECTLY .

2. UNDERGROUND UTILITIES NOT LOCATED BY THIS SURVEY.

3. NO ATTEMPT WAS MADE TO DETERMINE IF ANY PORTION OF THIS SURVEY IS CLAIMED BY THE STATE OF N.J. AS TIDELANDS.

4. DEED REFERENCE BOOK OR 8182 , PAGE 8463 .

5. ENVIRONMENTALLY SENSITIVE AREAS ARE NOT LOCATED BY THIS SURVEY.

6. A WRITTEN WAIVER AND DIRECTION NOT TO SET CORNERS MARKERS HAS BEEN OBTAINED FROM THE ULTIMATE USER PURSUANT TO N.J.A.C. 13:40-5.1(d).

NOTES:

1. PROPERTY BEING KNOWN AS LOT 88 IN BLOCK 42 AS SHOWN ON THE TOWNSHIP OF HOWELL TAX MAP SHEET #10 DATED APRIL 1958 AND LAST REVISED OCTOBER 1985.

NO	DESCRIPTION	DATE	D/C

CREST
Engineering Associates Inc.
Civil & Environmental Engineers
Professional Planners · Surveyors · Landscape Architects
· CERTIFICATE OF AUTHORIZATION NO. 24GA27989300 ·
100 RICE DRIVE
WALL STONE TOWNSHIP
FREEHOLD, N.J. 07728
PH.(609)448-5554
8 ROBBINS DRIVE
EAST WINDSOR, N.J. 08520
TOMS RIVER, N.J. 08753
PH.(732)341-1138
DANIEL P. HUNDLEY
LICENSED PROFESSIONAL LAND SURVEYOR N.J. LIC. NO. 24GS03174600

DATE 4/6/05
SCALE 1"=100'
DRAWN PS
CHECKED KAW
SHEET 2 OF 12
POCKET

LOT 88
BLOCK 42

HOWELL TOWNSHIP
MONMOUTH COUNTY, NEW JERSEY

FILE N-4749

BOUNDARY & TOPOGRAPHIC SURVEY

DWG. NO. 10402

CADD FILE: 4749topo.dwg

LDS HW-PZ 10402073

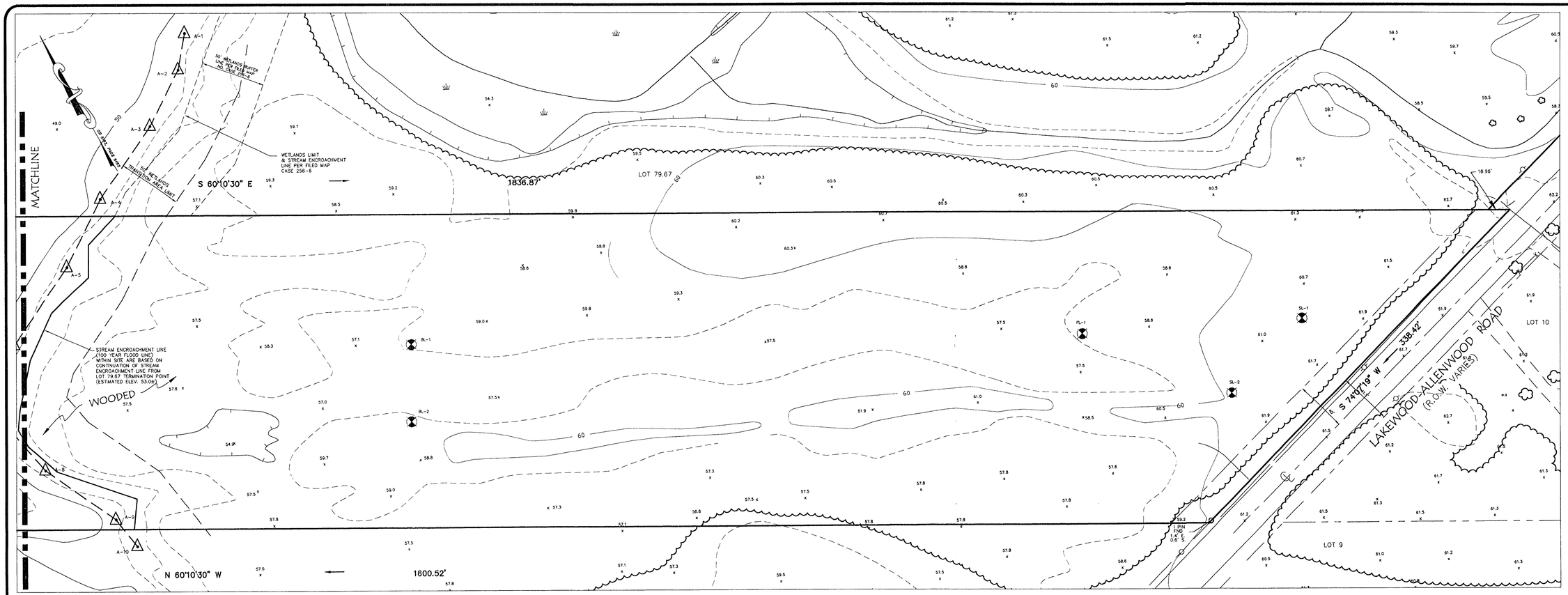

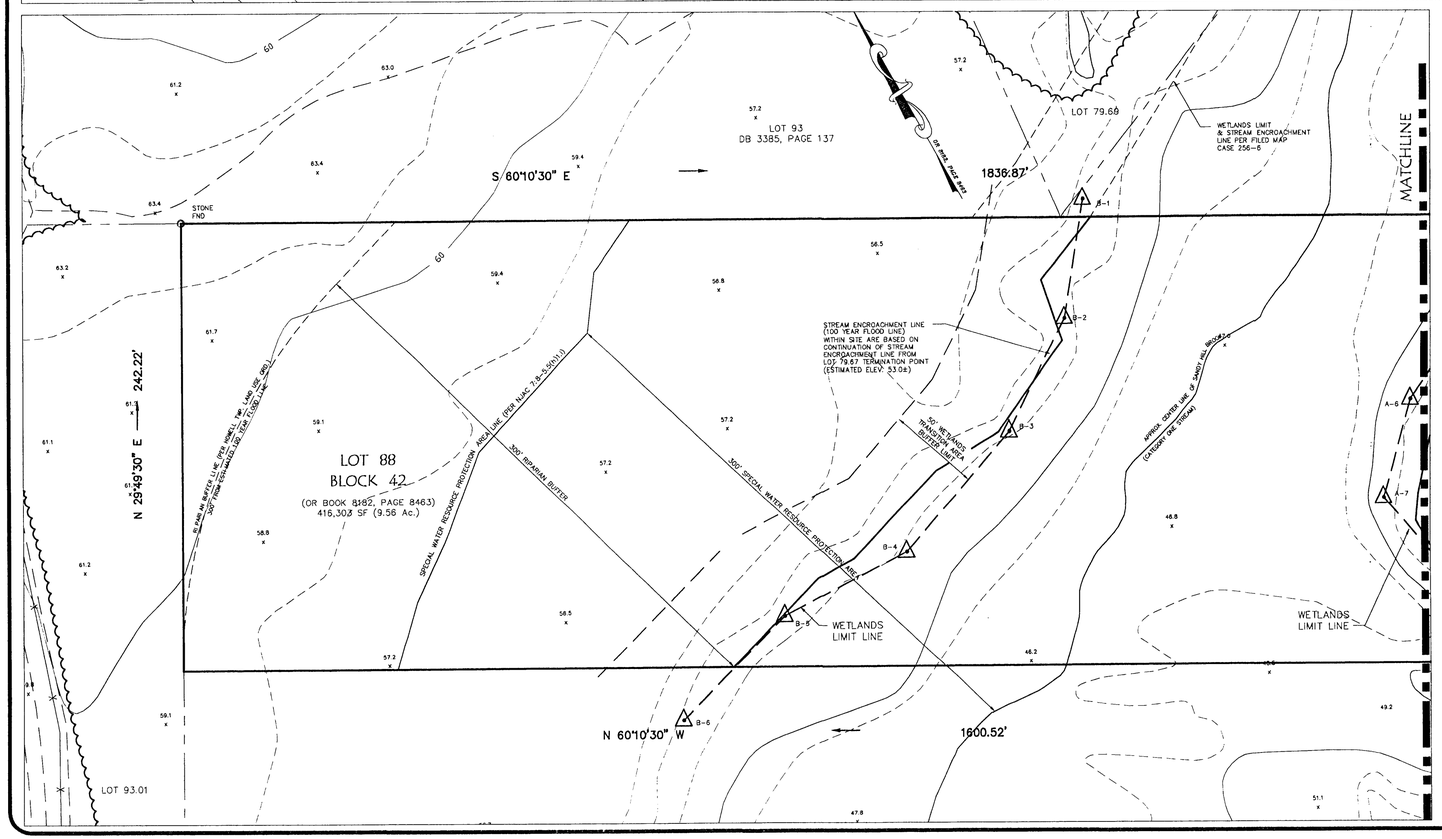

NO	DESCRIPTION	DATE	D/C

CREST

Engineering Associates Inc.
Civil & Environmental Engineers
Professional Planners · Surveyors · Landscape Architects
· CERTIFICATE OF AUTHORIZATION NO. 24GA27989300 ·

100 RIKE DRIVE
HILLSTONE TOWNSHIP
EGHLSHTOWN, N.J. 08536
PH:(609)448-5551

18 ROBBINS ROAD
AT WATER STREET
TIMS NECK, N.J. 07753
PH:(732)974-0199

DANIEL P. HUNDELT
LICENSED PROFESSIONAL LAND SURVEYOR N.J. LICENSE NO. 24GS03611300

DATE	3/28/06
SCALE	1"=40'
DRAWN	PS
CHECKED	MPI
SHEET	3 OF 12
POCKET	

LOT 88
BLOCK 42

HOWELL TOWNSHIP
MONMOUTH COUNTY, NEW JERSEY

FILE N-4749

EX. CONDITIONS & WOODLANDS MANAGEMENT PLAN

DWG. NO.

CAD FILE: 1749exc.dwg
2007

LDS HW-PZ 10402073

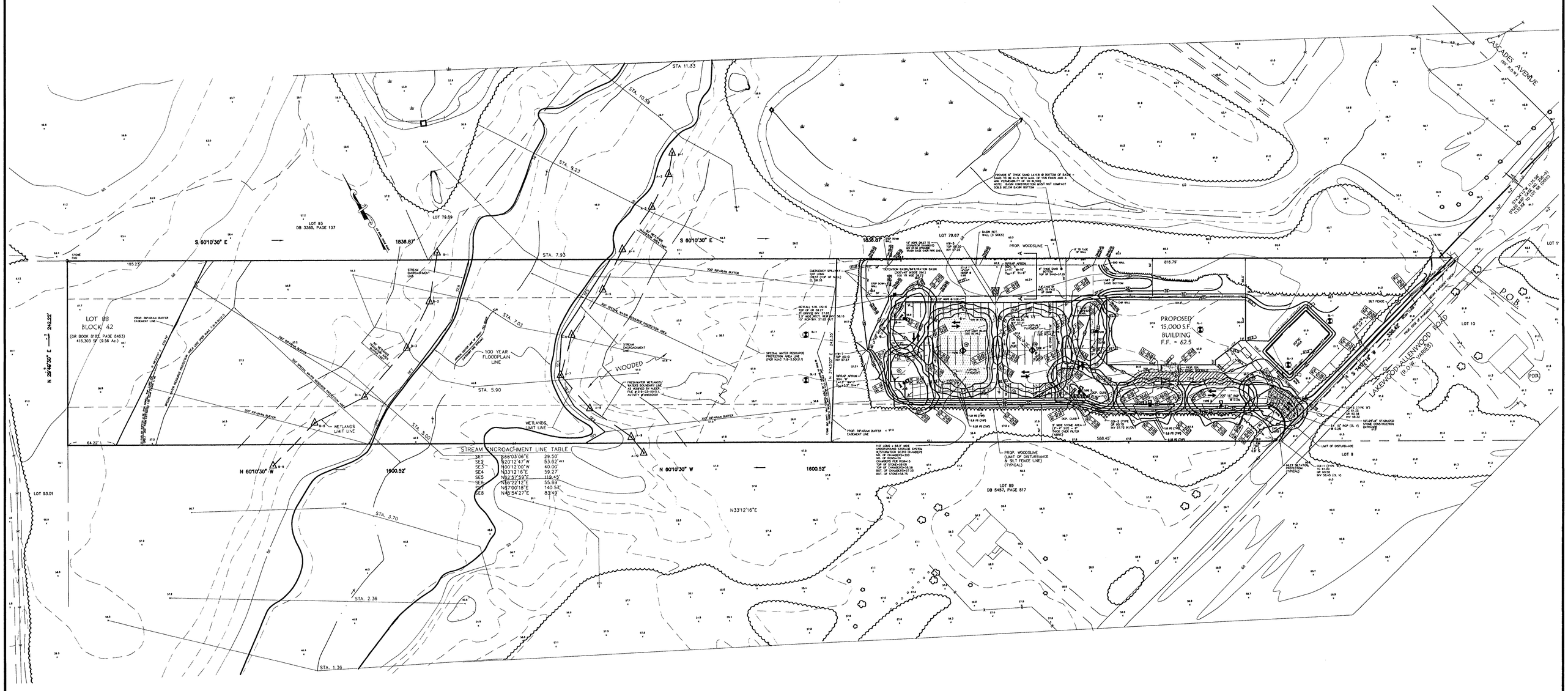

NO	DESCRIPTION	DATE	D/C

CREST

Engineering Associates Inc.

Civil & Environmental Engineers

Professional Planners · Surveyors · Landscape Architects

· CERTIFICATE OF AUTHORIZATION NO. 24GA27989300 ·

100 RIKE DRIVE
MILLSTONE TOWNSHIP
ENGLISHTOWN, N.J. 07726
PH(609)443-5550

12 ROBBINS STREET
FREEHOLD, N.J. 07728
PH(732)294-0888

MICHAEL B. LINTILL
PROFESSIONAL ENGINEER NJ LIC. No. 24GE02271100

DATE	1/16/05
SCALE	1"=60'
DRAWN	PS
CHECKED	MJP
SHEET	4 OF 12
POCKET	

LOT 88
BLOCK 42

HOWELL TOWNSHIP
MONMOUTH COUNTY, NEW JERSEY

FILE N-4749

OVERALL
DEVELOPMENT
PLAN

DWG. NO.

CAD FILE: 4749overall.dwg

LDS HW-PZ 10402073

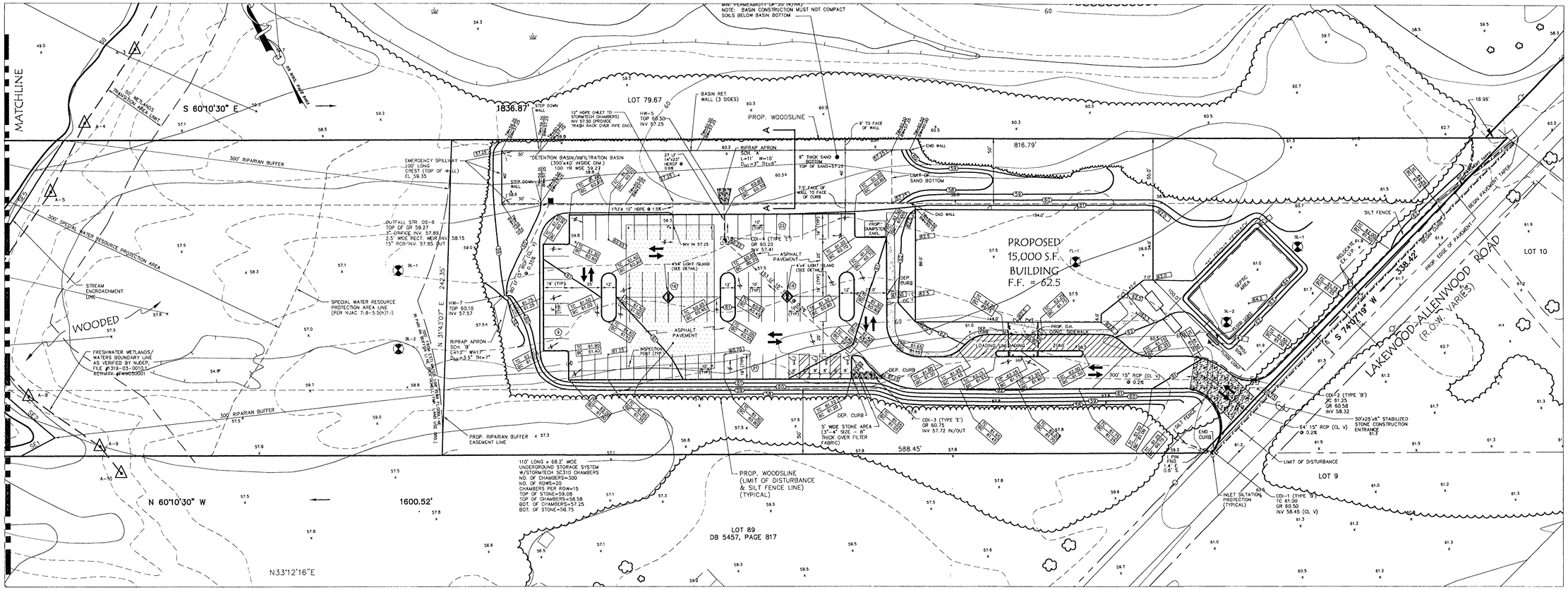

LOG NUMBER: SL-1
DATE: FEBRUARY 2, 2006

DEPTH	DESCRIPTION
0" – 4"	HUMUS
4" – 11"	2.5Y4/3 OLIVE BROWN SANDY LOAM; MODERATE MEDIUM SUBANGULAR BLOCKY; MOIST; FRIABLE; FEW ROOTS; ABRUPT SMOOTH BOUNDARY
11" – 31"	10YR5/6 YELLOWISH BROWN SANDY LOAM; MODERATE MEDIUM SUBANGULAR BLOCKY; MOIST; FRIABLE; FEW ROOTS; ABRUPT SMOOTH BOUNDARY
31" – 110"	2.5Y6/4 LIGHT YELLOWISH BROWN LOAMY SAND; MODERATE MEDIUM SUBANGULAR BLOCKY; MOIST; VERY FRIABLE; MOTTLING @ 34" 10YR6/8 BROWNISH YELLOW; COMMON MEDIUM DISTINCT

WATER ENCOUNTERED @ 105"

GROUND WATER OBSERVATIONS: SEEPAGE 8.75'

REGIONAL ZONE OF SATURATION – DEPTH TO TOP 2.83'

LOG NUMBER: SL-2
DATE: FEBRUARY 2, 2006

DEPTH	DESCRIPTION
0" – 4"	HUMUS
4" – 9"	10YR4/4 DARK YELLOWISH BROWN SANDY LOAM; MODERATE MEDIUM SUBANGULAR BLOCKY; MOIST; FRIABLE; FEW ROOTS; ABRUPT SMOOTH BOUNDARY
9" – 35"	10YR5/6 BROWNISH YELLOW SANDY LOAM; MODERATE MEDIUM SUBANGULAR BLOCKY; MOIST; FRIABLE; FEW ROOTS; ABRUPT SMOOTH BOUNDARY
35" – 105"	2.5Y7/6 YELLOW SAND; SINGLE GRAIN; MOIST TO SATURATED; LOOSE; MOTTLING @ 38", 10YR6/8 BROWNISH YELLOW; COMMON MEDIUM DISTINCT

WATER ENCOUNTERED @ 103"

GROUND WATER OBSERVATIONS: SEEPAGE 8.58'

REGIONAL ZONE OF SATURATION – DEPTH TO TOP 3.17'

LOG NUMBER: BL-1
DATE: FEBRUARY 2, 2006

DEPTH	DESCRIPTION
0" – 3"	HUMUS
3" – 7"	10YR3/3 DARK BROWN LOAMY SAND; MODERATE MEDIUM SUBANGULAR BLOCKY; MOIST; FRIABLE; COMMON ROOTS; ABRUPT SMOOTH BOUNDARY
7" – 21"	10YR3/4 YELLOWISH BROWN SANDY CLAY LOAM; MODERATE MEDIUM SUBANGULAR BLOCKY; MOIST; FRIABLE; ABRUPT SMOOTH BOUNDARY
21" – 64"	10YR6/8 BROWNISH YELLOW MEDIUM TO COARSE SAND; SINGLE GRAIN; MOIST; LOOSE; ABRUPT SMOOTH BOUNDARY; MOTTLING @ 40", 7.5YR8/3 LIGHT BROWN; COMMON MEDIUM DISTINCT
64" – 84"	2.5Y5/3 LIGHT OLIVE BROWN SILT LOAM; MODERATE MEDIUM SUBANGULAR BLOCKY; MOIST TO SATURATED; FRIABLE; ABRUPT SMOOTH BOUNDARY; MOTTLING, 10YR6/8 BROWNISH YELLOW; COMMON MEDIUM FAINT
84" – 115"	10YR6/8 BROWNISH YELLOW COARSE SAND; SINGLE GRAIN; MOIST; LOOSE; MOTTLING, 7.5YR8/3 LIGHT BROWN; COMMON MEDIUM DISTINCT

WATER ENCOUNTERED @ 84"

GROUND WATER OBSERVATIONS: SEEPAGE 7'

LOG NUMBER: BL-2
DATE: FEBRUARY 2, 2006

DEPTH	DESCRIPTION
0" – 4"	HUMUS
4" – 10"	10YR4/5 YELLOWISH BROWN SANDY LOAM; MODERATE MEDIUM SUBANGULAR BLOCKY; MOIST; FRIABLE; COMMON ROOTS; ABRUPT SMOOTH BOUNDARY
10" – 31"	10YR5/8 YELLOWISH BROWN LOAM; MODERATE MEDIUM SUBANGULAR BLOCKY; MOIST; FRIABLE; ABRUPT SMOOTH BOUNDARY
31" – 110"	2.5Y7/6 YELLOW SAND; SINGLE GRAIN; MOIST; LOOSE; MOTTLING @ 43", 2.5Y6/3 LIGHT YELLOWISH BROWN; COMMON MEDIUM FAINT

WATER ENCOUNTERED @ 92"

GROUND WATER OBSERVATIONS: SEEPAGE 7.7'

LOG NUMBER: FL-1
DATE: FEBRUARY 2, 2006

DEPTH	DESCRIPTION
0" – 4"	HUMUS
4" – 14"	2.5Y3/2 VERY DARK GRAYISH BROWN LOAMY SAND; MODERATE MEDIUM SUBANGULAR BLOCKY; MOIST; VERY FRIABLE; FEW ROOTS; ABRUPT SMOOTH BOUNDARY
14" – 34"	10YR5/8 YELLOWISH BROWN SANDY LOAM; MODERATE MEDIUM SUBANGULAR BLOCKY; MOIST; FRIABLE; ABRUPT SMOOTH BOUNDARY
34" – 95"	10YR5/8 YELLOWISH BROWN SAND; SINGLE GRAIN; MOIST TO SATURATED; MOOSE; MOTTLING @ 34", 7.5YR8/8 REDDISH YELLOW; COMMON MEDIUM DISTINCT

WATER ENCOUNTERED @ 51"

GROUND WATER OBSERVATIONS: SEEPAGE 4.25'

SOIL LOG DATA

	ELEV.	ESHWT	ESHWT ELEV.
SL-1	60.2	34"	57.37
SL-2	61.1	38"	57.93
FL-1	58.1	34"	55.27
BL-1	58.1	40"	54.77
BL-2	57.8	43"	54.27

NOTE: PROPOSED LAWN AREAS SHALL BE GRADED WITH LIGHTWEIGHT CONSTRUCTION EQUIPMENT.

STREAM ENCROACHMENT LINE TABLE

SE1	S88°03'06"E	29.50'
SE2	N20°12'47"W	53.62'
SE3	N00°12'00"W	40.00'
SE4	N33°12'16"E	59.27'
SE5	N62°57'59"E	119.45'
SE6	N56°22'12"E	55.89'
SE7	N67°00'18"E	140.52'
SE8	N45°54'27"E	83.49'

NO	DESCRIPTION	DATE	BY

CREST
Engineering Associates Inc.
Civil & Environmental Engineers
Professional Planners • Surveyors • Landscape Architects
• CERTIFICATE OF AUTHORIZATION NO. 24GA27989300 •
100 RIKE DRIVE
MILLSTONE TOWNSHIP
ENGLISHTOWN, N.J. 07726
Ph(609)448-5550
13 JOBBINS PLWY.
WATER STREET
HOPEWELL, N.J. 08525
Ph(609)466-0888(5)
MICHAEL B. INTILE
PROFESSIONAL ENGINEER NJ LIC. NO. 35271

DATE 3/28/06
SCALE 1"=40'
DRAWN PS
CHECKED MBI
SHEET 5 OF 12
POCKET

LOT 88
BLOCK 42
HOWELL TOWNSHIP
MONMOUTH COUNTY, NEW JERSEY
FILE N-4749

GRADING & UTILITY PLAN
SOIL EROSION AND SEDIMENT CONTROL PLAN
DWG. NO. 5027
CAD FILE: 4749-PREL.DWG

LDS HW-PZ 10402073

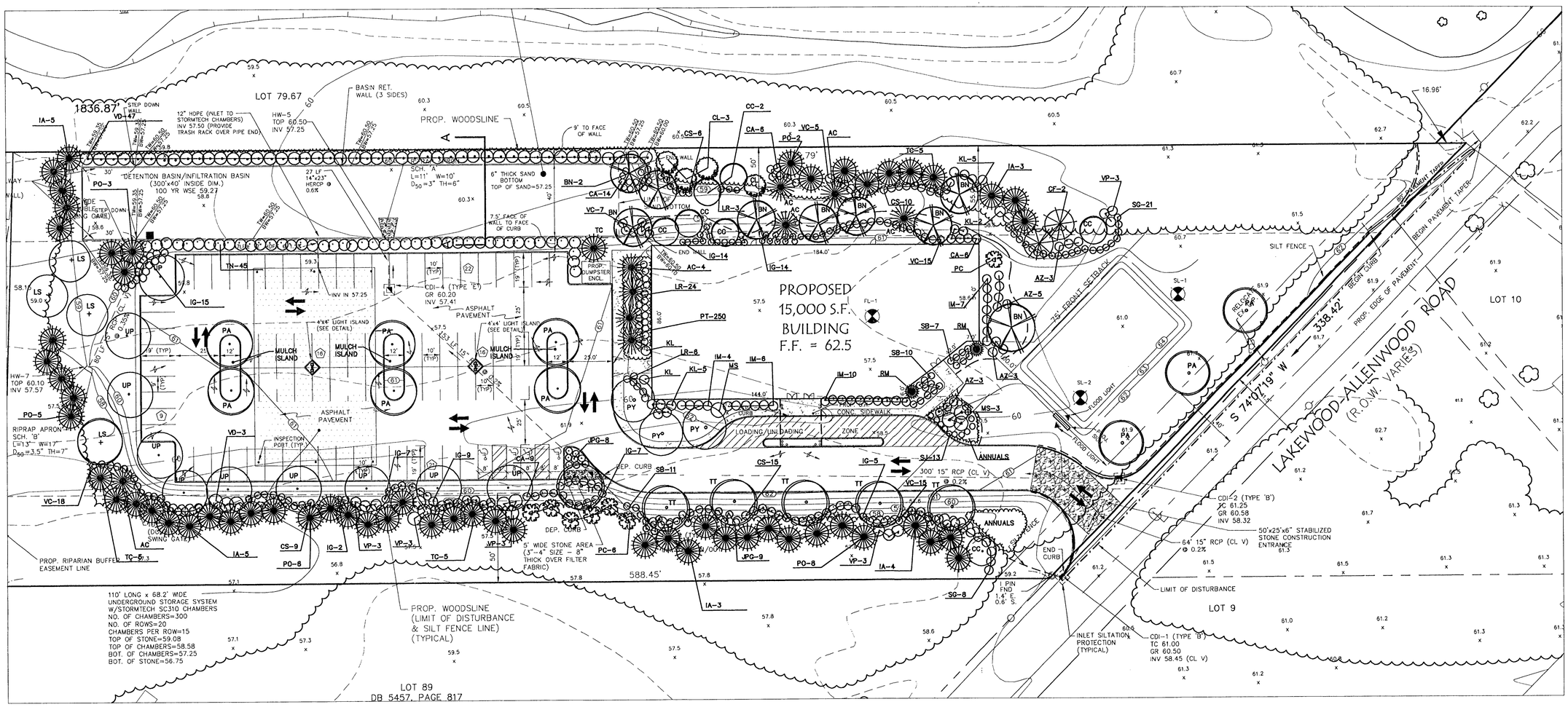

GENERAL PLANTING NOTES

1. THIS PLAN SHALL BE USED FOR LANDSCAPE PLANTING PURPOSES ONLY. EXAMINE ALL ENGINEERING DRAWINGS AND FIELD CONDITIONS FOR SPECIFIC LOCATIONS OF UTILITIES AND STRUCTURES AND NOTIFY THE LANDSCAPE ARCHITECT OF ANY DISCREPANCIES OR LOCATION CONFLICTS PRIOR TO PLANTING INSTALLATION.

2. ALL PLANT MATERIAL SHALL CONFORM TO THE STANDARDS OF THE AMERICAN ASSOCIATION OF NURSERYMEN OR THE PLANT MATERIAL WILL BE UNACCEPTABLE. ALL PLANT MATERIAL SHALL BE TRUE TO SPECIES, VARIETY, SIZE AND BE CERTIFIED DISEASE AND INSECT FREE.

3. NO PLANT SUBSTITUTIONS SHALL BE PERMITTED WITH REGARDS TO SIZE, SPECIES OR VARIETY WITHOUT WRITTEN PERMISSION OF THE LANDSCAPE ARCHITECT OR TOWNSHIP OFFICIALS. WRITTEN PROOF OF PLANT MATERIAL UNAVAILABILITY MUST BE DOCUMENTED.

4. THE LOCATION OF ALL PLANT MATERIAL INDICATED ON THE LANDSCAPE PLANS ARE APPROXIMATE. THE FINAL LOCATION OF ALL PLANT MATERIAL AND PLANTING BED LINES SHALL BE DETERMINED IN THE FIELD UNDER THE DIRECTION OF THE LANDSCAPE ARCHITECT. NO SHADE TREE, STREET TREE, ORNAMENTAL FLOWERING TREE OR EVERGREEN TREE SHALL BE PLANTED CLOSER THAN 10' FROM ANY SIDEWALK, DRIVEWAY, CURB OR UTILITY LOCATION UNLESS SPECIFICALLY DIMENSIONED ON THE LANDSCAPE PLAN.

5. ALL STREET TREES AND SHADE TREES PLANTED NEAR PEDESTRIAN OR VEHICULAR ACCESS SHOULD NOT BE BRANCHED LOWER THAN 7'-0" ABOVE GRADE. ALL PLANT MATERIAL LOCATED WITHIN SIGHT TRIANGLE EASEMENTS SHALL NOT EXCEED A MATURE HEIGHT OF 30" ABOVE THE ELEVATION OF THE ADJACENT CURB. ALL STREET TREES PLANTED IN SIGHT TRIANGLE EASEMENTS SHALL BE PRUNED TO NOT HAVE BRANCHES BELOW 7'-0".

6. THE PLANTING PLAN SHALL TAKE PRECEDENCE OVER THE PLANT SCHEDULE SHOULD ANY PLANT QUANTITY DISCREPANCIES OCCUR.

7. ALL PLANT MATERIAL SHALL BE PROPERLY GUYED, STAKED, WRAPPED AND PLANTED IN CONFORMANCE WITH THE TYPICAL PLANTING DETAILS. GUY WIRES SHALL BE ATTACHED TO THE TREE AT A HEIGHT OF TWO-THIRDS THE HEIGHT OF THE TREE AND SHOULD BE LOCATED AT POINTS SO AS NOT TO SPLIT THE TRUNKS OF MULTI-STEMMED TREES. PROVIDE 2 TREE STAKES PER TREE UNLESS NOTED OTHERWISE. INSTALL ALL PLANT MATERIAL ON UNDISTURBED GRADE. PROVIDE BURLAP WRAPPING WITH A 50% OVERLAP. CUT AND REMOVE BURLAP FROM TOP ONE-THIRD OF THE ROOT BALL.

8. PROVIDE PLANTING PITS AS INDICATED ON PLANTING DETAILS. BACKFILL PLANTING PITS WITH ONE PART EACH OF TOPSOIL, PEAT MOSS AND PARENT MATERIAL. IF WET SOIL CONDITIONS EXIST THEN PLANTING PITS SHALL BE EXCAVATED AN ADDITIONAL 12" AND FILLED WITH SAND.

9. ALL PLANT MATERIAL SHALL BEAR THE SAME RELATION TO FINISHED GRADE AS IT BORE TO EXISTING GRADE.

10. NEWLY INSTALLED PLANT MATERIAL SHALL BE WATERED AT THE TIME OF INSTALLATION. REGULAR WATERING SHALL BE PROVIDED TO ENSURE THE ESTABLISHMENT OF GROWTH AND SURVIVAL OF ALL PLANTS.

11. ALL PLANT MATERIAL SHALL BE GUARANTEED FOR ONE YEAR AFTER THE DATE OF FINAL ACCEPTANCE BY THE LANDSCAPE ARCHITECT.

12. ALL EXISTING TREES AND SHRUBS TO BE PRESERVED ON SITE SHALL BE PROTECTED AGAINST CONSTRUCTION DAMAGE BY SNOW FENCING. ALL FENCING SHALL BE PLACED OUTSIDE THE INDIVIDUAL TREE CANOPY. ALL TREES TO REMAIN SHALL BE IDENTIFIED IN THE FIELD PRIOR TO COMMENCEMENT OF CONSTRUCTION, GRADING OR CLEARING. ALL EXISTING VEGETATION BEING PRESERVED AND LOCATED AT THE EDGE OF THE NEW TREELINE SHALL BE PRUNED AND TRIMMED TO REMOVE ALL DEAD, DISEASED OR DAMAGED BRANCHES.

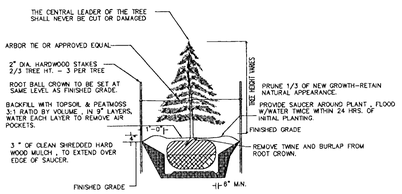

PLANTING DETAIL
(EVERGREEN TREE)
N.T.S.

NOTE: INSTALL PROTECTIVE SNOW FENCING AROUND EXISTING TREES TO BE SAVED PRIOR TO ANY SITE DISTURBANCE FENCE SHOULD BE INSTALLED AT THE CANOPY EDGE AS SHOWN ABOVE.

PROTECTIVE SNOW FENCE DETAIL
N.T.S.

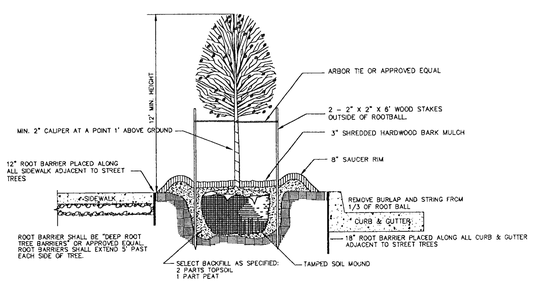

SHADE TREE PLANTING DETAIL
N.T.S.

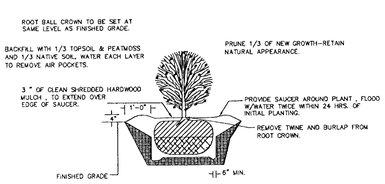

PLANTING DETAIL
(DECIDUOUS & EVERGREEN SHRUB)
N.T.S.

PLANT SCHEDULE

SYM.	AMT.	BOTANICAL NAME	COMMON NAME	SIZE
AC	9	AMELANCHIER CANADENSIS	SERVICEBERRY	5-6', SHRUBFORM
AZ	14	AZALEA POUKHANENSIS	KOREAN AZALEA	18-24", #3 CAN
BN	9	BETULA NIGRA 'HERITAGE'	'HERITAGE' RIVER BIRCH	6-7', B&B
CA	35	CLETHRA ALIFOLIA	SWEET PEPPERBUSH	18-24", #3 CAN
CC	7	CERCIS CANADENSIS	EASTERN REDBUD	5-6', B&B
CF	2	CORNUS FLORIDA	WHITE DOGWOOD	5-6', B&B
CL	4	CUPRESSOCYPARIS LEYLANDI	LEYLAND FALSECYPRESS	5-6', B&B
CS	40	CORNUS ALBA SIBERICA	REDTWIG DOGWOOD	18-24", #3 CAN
IA	20	ILEX OPACA	AMERICAN HOLLY	5-6', B&B
IG	73	ILEX GLABRA 'SHAMROCK'	SHAMROCK INKBERRY HOLLY	18-24", #3 CAN
IM	27	ILEX MESERVAEN 'CHINA GIRL'	CHINA GIRL HOLLY	18-24", #3 CAN
JPG	17	JUNIPERUS PFITZERIANA AUREA	GOLD TIP PFITZER	18-24", #3 CAN
KL	14	ALMIA LATIFOLIA	MOUNTAIN LAUREL	18-24", #3 CAN
LR	33	LEUCOTHOE 'GIRARDS RAINBOW'	GIRARDS RAINBOW LEUCOTHOE	15-18", #2 CAN
LS	4	LIQUIDAMBAR STYRAEIFLUA	SWEETGUM	2-2 1/2" CAL., B&B
MS	4	MAGNOLIA STELLATA	STAR MAGNOLIA	3-4', B&B
PA	9	PLATANUS ACERIFOLIA 'BLOODGOOD'	BLOODGOOD LONDON PLANETREE	2-1/2 - 3" CAL., B&B
PC	7	PINUS CEMBRA	SWISS STONE PINE	5-6', B&B
PO	18	PICEA OMORIKA	SERBIAN SPRUCE	5-6', B&B
PT	250	PACHYSANDRA TERMINALIS	PACHYSANDRA	1 YEAR
PY	3	PRUNUS YEDOENSIS	YOSHINO CHERRY	7-8', B&B
RM	2	RHODODENDRON MAXIMUM	ROSEBAY RHODODENDRON	24-30", #5 CAN
SB	28	SPIREA BUMALDA	ANTHONY WATERER SPIREA	18-24", #3 CAN
SG	29	SPIREA 'GOLD FLAME'	GOLD FLAME SPIREA	18-24", #3 CAN
SJ	13	SPIREA JAPONICA 'LITTLE PRINCESS'	LITTLE PRINCESS DWARF SPIREA	15-18", #2 CAN
TC	16	TSUGA CANADENSIS	CANADIAN HEMLOCK	5-6', B&B
TN	45	THUJA OCC. NIGRA	DARK AMERICAN ARBORVITAE	5-6', B&B
TT	6	TILIA TOMENTOSA	SILVER LINDEN	2-1/2 - 3" CAL., B&B
UP	10	ULMUS PARVIFOLIA	CHINESE LACEBARK ELM	2-1/2 - 3" CAL., B&B
VC	50	VIRBURNUM CARLESI	FRAGRANT VIBURNUM	18-24", #3 CAN
VD	50	VIBURNUM DENTATUM	ARROWWOOD VIBURNUM	18-24", #3 CAN
VP	15	VIBURNUM PRUNIFOLIUM	BLACKHAW VIBURNUM	18-24", #3 CAN

NOTE: ALL TREES SHALL BE A MINIMUM OF 2-1/2" DIAMETER MEASURED AT 6" ABOVE GRADE

NO	DESCRIPTION	DATE	D/C

CREST
Engineering Associates Inc.
Civil & Environmental Engineers
Professional Planners • Surveyors • Landscape Architects
• CERTIFICATE OF AUTHORIZATION NO. 24GA27989300 •
100 RIKE DRIVE, MILLSTONE TOWNSHIP, ENGLISHTOWN, N.J. 07726, PH/732/446-5550
12 ROBBINS PKWY. AT WATER STREET, TOMS RIVER, N.J. 08753, PH/732/244-8888
RICHARD P. WIENER
C.L.A. NJ LIC. NO. AS00464

DATE 3/28/06
SCALE 1"=30'
DRAWN PS
CHECKED MR
SHEET 5 OF 12
POCKET

LOT 88
BLOCK 42

HOWELL TOWNSHIP
MONMOUTH COUNTY, NEW JERSEY

LANDSCAPE PLAN

FILE N-4749
DWG. NO.
CAD FILE: 4749landscape.dwg

LDS HW-PZ 10402073

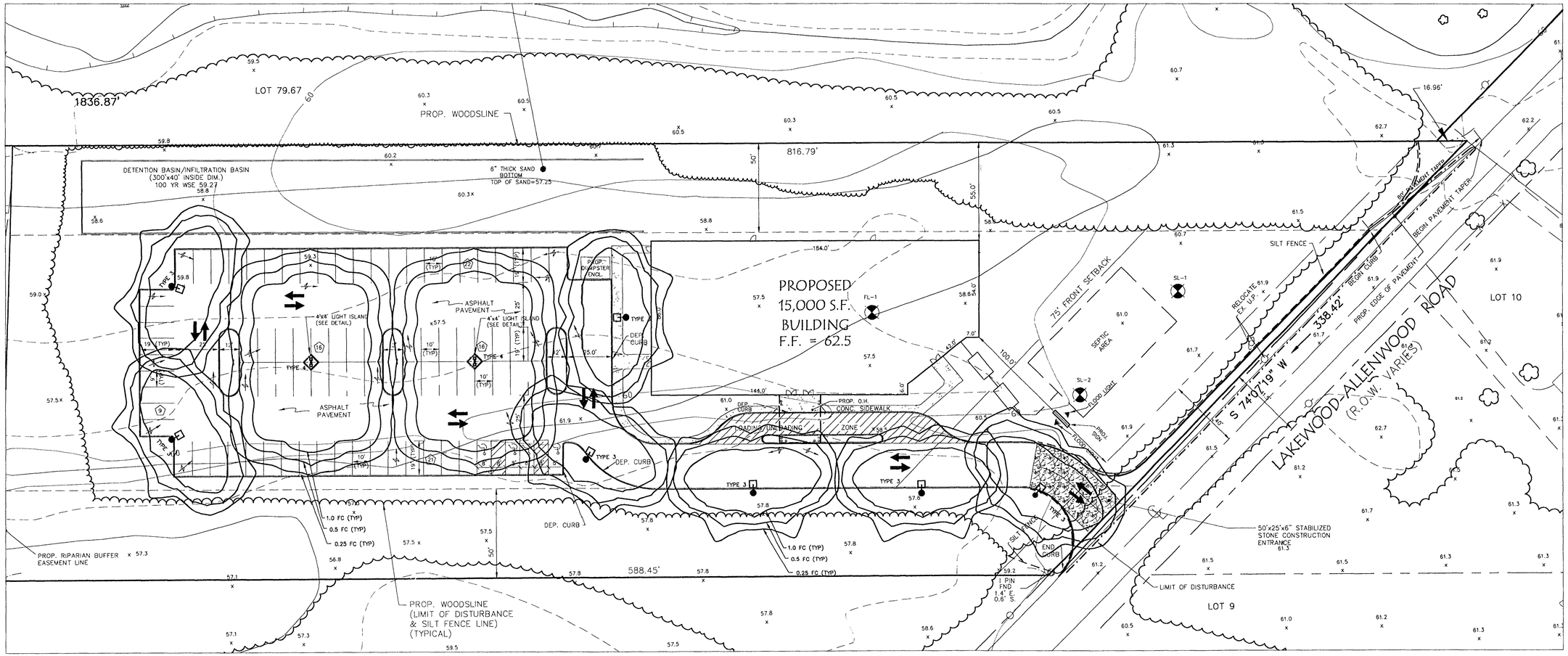

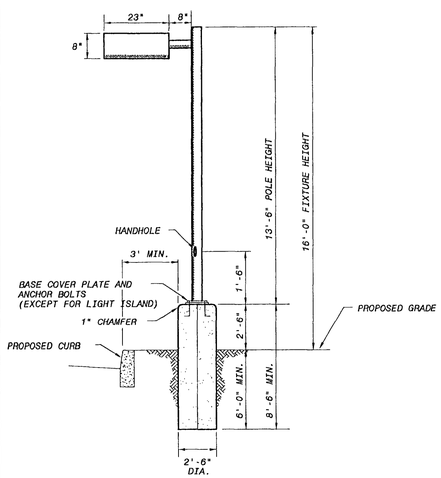

LIGHT POLE AND FIXTURE DETAIL

N.T.S

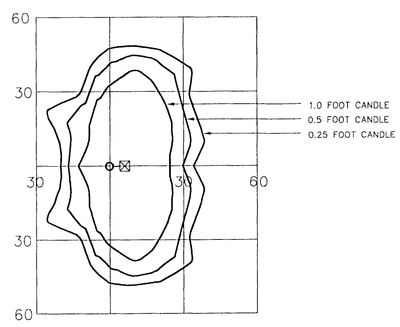

SINGLE POLE MOUNTED LIGHT FIXTURE

15' MOUNTING HEIGHT
250 WATT METAL HALIDE
TYPE 3 INTERNAL HOUSE-SIDE SHIELD
TOTAL: 7 TYPE 3

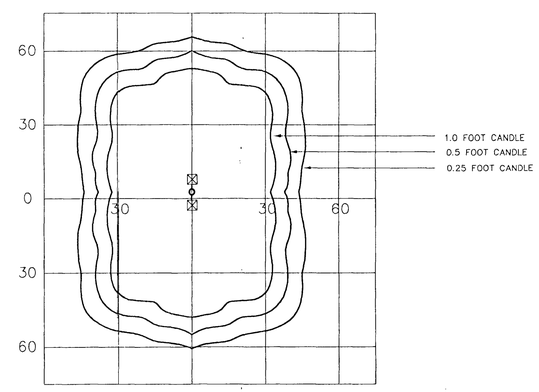

DOUBLE POLE MOUNTED LIGHT

15' MOUNTING HEIGHT
400 WATT METAL HALIDE
TYPE 4
TOTAL: 2 TYPE 4

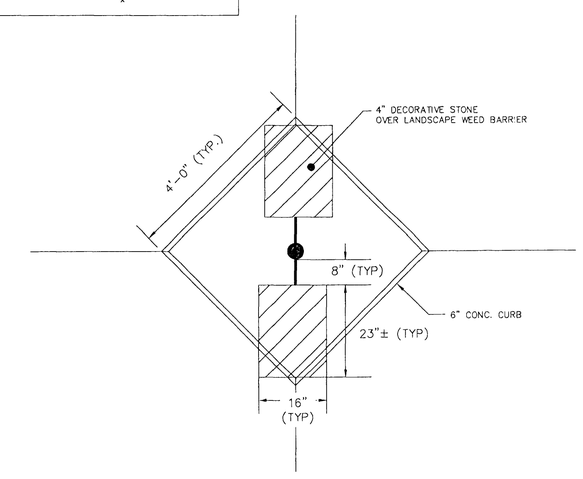

LIGHT ISLAND DETAIL

N.T.S

NO	DESCRIPTION	DATE	D/C

CREST
Engineering Associates Inc.
Civil & Environmental Engineers
Professional Planners · Surveyors · Landscape Architects
· CERTIFICATE OF AUTHORIZATION NO. 24GA27989300 ·
100 RIKE DRIVE, MILLSTONE TOWNSHIP, ENGLISHTOWN, N.J. 07726, Ph(609)448-5550
12 ROBBINS PKWY., AT WATER STREET, TOMS RIVER, N.J. 08753, Ph(732)244-0881
RICHARD P. WIENER
C.L.A. NJ LIC. NO. AS00464

DATE 3/28/06
SCALE 1"=30'
DRAWN PS
CHECKED MJR
SHEET OF 12
POCKET

LOT 88
BLOCK 42
HOWELL TOWNSHIP
MONMOUTH COUNTY, NEW JERSEY

FILE N-4749

LIGHTING PLAN

DWG. NO.
CAD FILE: 4749LIGHT.dwg
XREF:

LDS HW-PZ 10402073

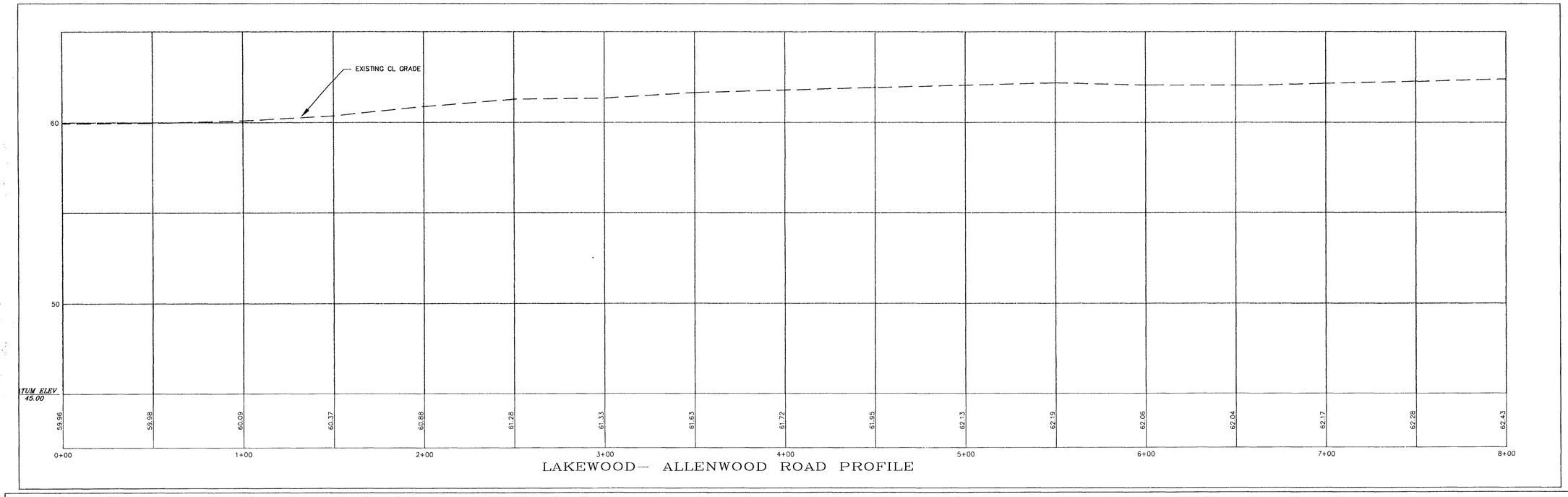

LAKEWOOD– ALLENWOOD ROAD PROFILE

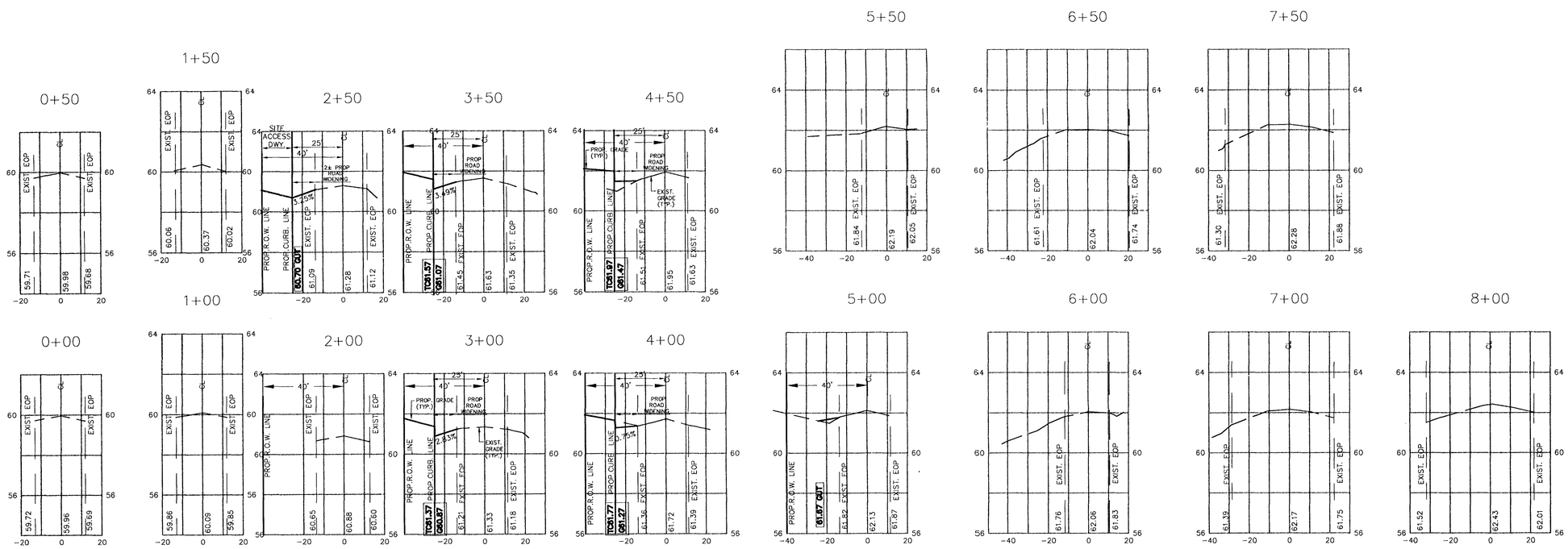

LAKEWOOD–ALLENWOOD ROAD
X–SECTIONS

NO	DESCRIPTION	DATE	D/C

CREST
Engineering Associates Inc.
Civil & Environmental Engineers
Professional Planners · Surveyors · Landscape Architects
· CERTIFICATE OF AUTHORIZATION NO. 24GA27989300 ·

100 RIKE DRIVE
MILLSTONE TOWNSHIP
ENGLISHTOWN, N.J. 07726
PH(609)446-8550

12 ROBBINS PKWY.
AT WATER STREET
PERTH AMBOY, N.J. 08861
PH(732)324-0888

MICHAEL P. CONTILE
PROFESSIONAL ENGINEER LICENSE NO. 35271

DATE	10/25/06
SCALE	H–1"=30' V–1"=3'
DRAWN	JBH
CHECKED	JP
SHEET	8 OF 13
POCKET	

LOT 88
BLOCK 42

HOWELL TOWNSHIP
MONMOUTH COUNTY, NEW JERSEY

FILE NO. 4749

LAKEWOOD–
ALLENWOOD ROAD
PROFILE &
X–SECTIONS

DWG. NO.
DGN. FILE: 4749PRO-XSEC
NEWPR. ROTATION:

\\4749\4749PRO-XSEC.dwg, 10/26/2006 8:34:45 AM, pat

LDS HW-PZ 10402073

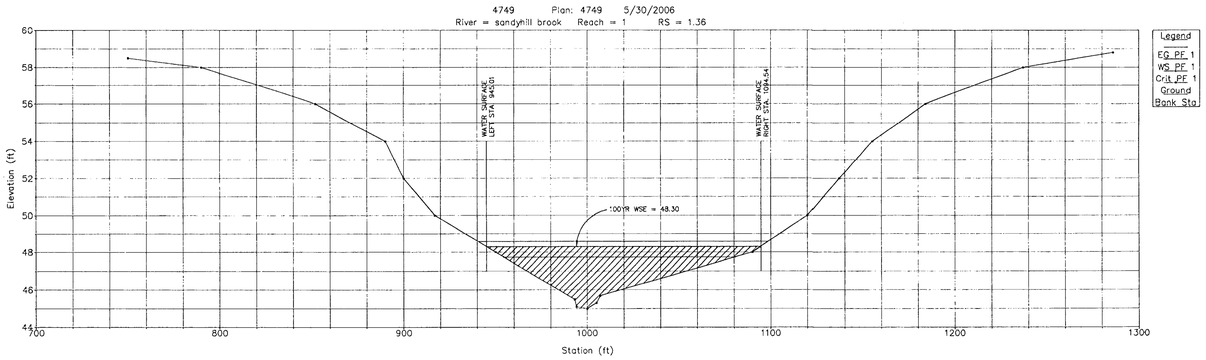

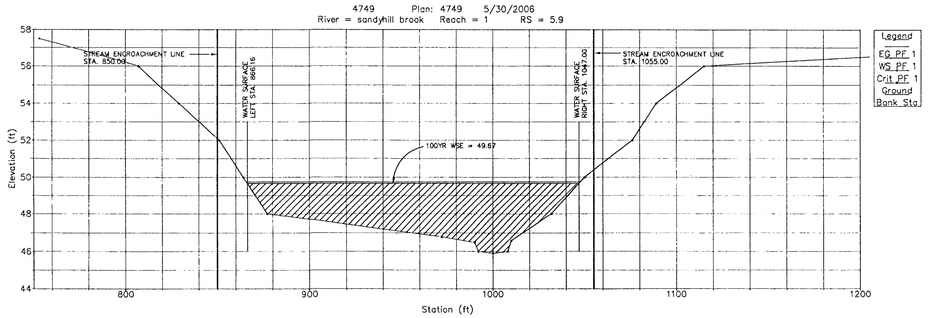

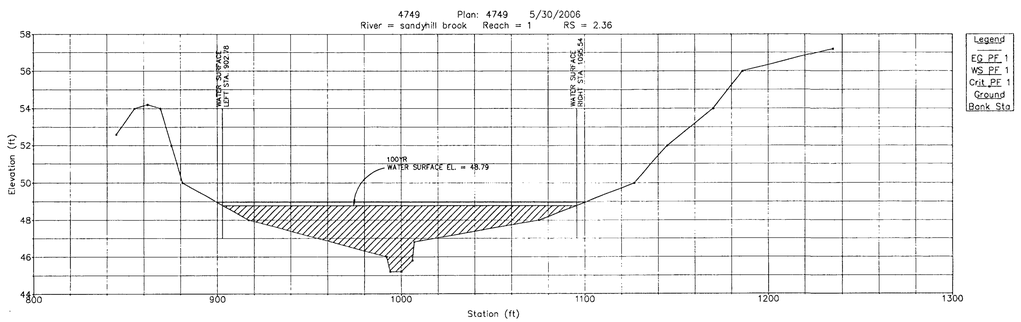

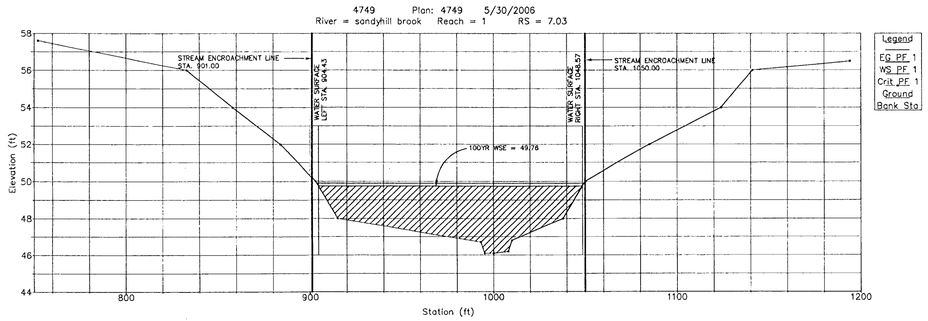

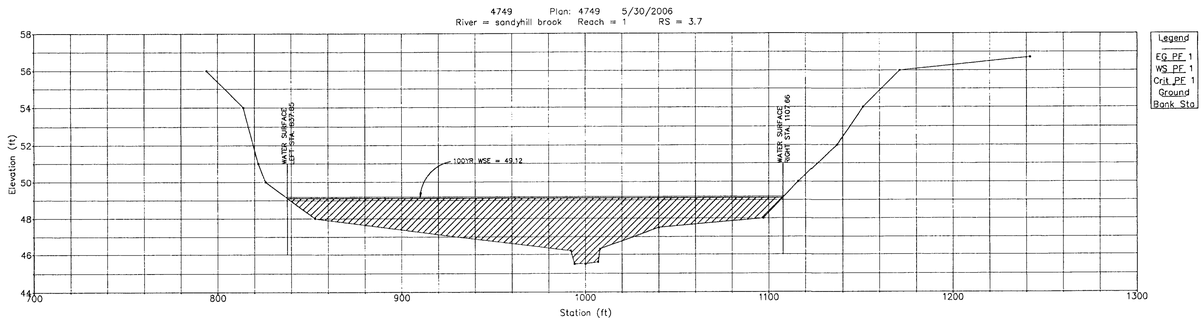

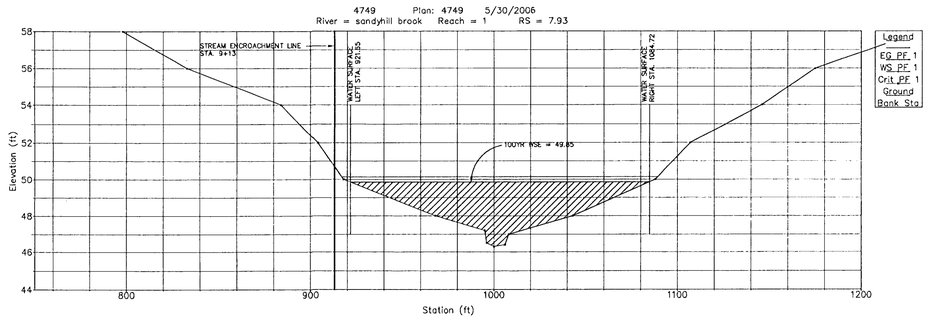

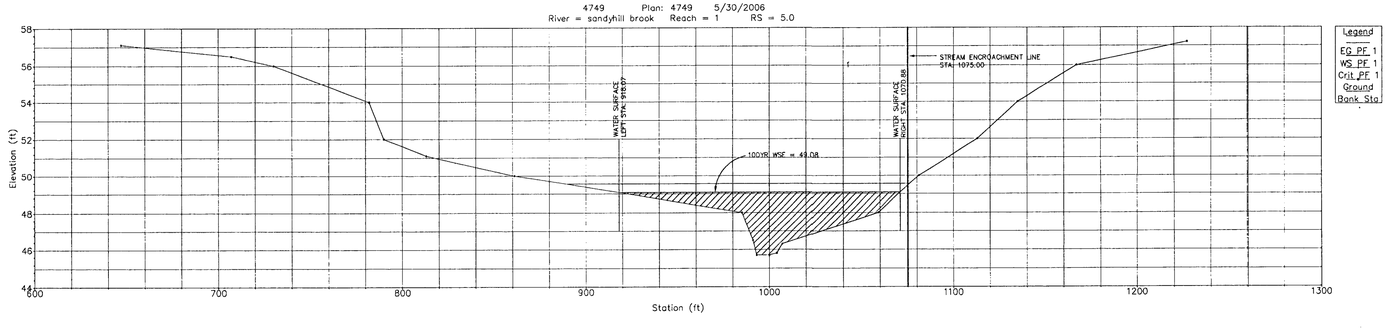

NO	DESCRIPTION	DATE	D/C

CREST
Engineering Associates Inc.
Civil & Environmental Engineers
Professional Planners • Surveyors • Landscape Architects
• CERTIFICATE OF AUTHORIZATION NO. 24GA27989300 •
100 RIKE DRIVE
MILLSTONE TOWNSHIP
ENGLISHTOWN, N.J. 07726
Ph(609)448-5550
12 ROBBINS PARKWAY
ALLAIRE STREET
BRADLEY BEACH, N.J. 07720
Ph(732)774-0888
MICHAEL B. LINTILL
PROFESSIONAL ENGINEER N.J. LIC. NO. 35321

DATE 3/28/06
SCALE 1"=40'
DRAWN PS
CHECKED MBL
SHEET 8 OF 12
POCKET

LOT 88
BLOCK 42

HOWELL TOWNSHIP
MONMOUTH COUNTY, NEW JERSEY

FILE N- 4749

SANDY HILL BROOK
CROSS SECTIONS

DWG. NO.
CAD FILE: 4749SHBROOKXSECT.DWG
XREF:

LDS HW-PZ 10402073

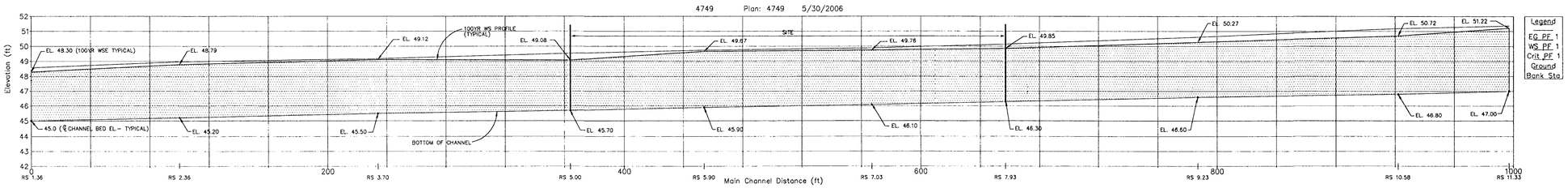

SANDY HILL BROOK – PROFILE

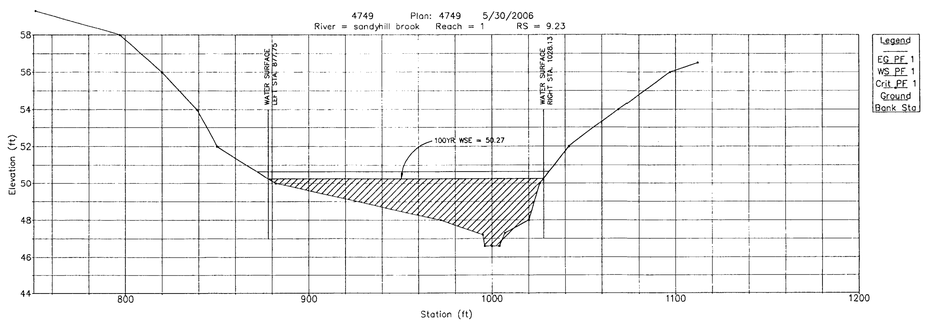

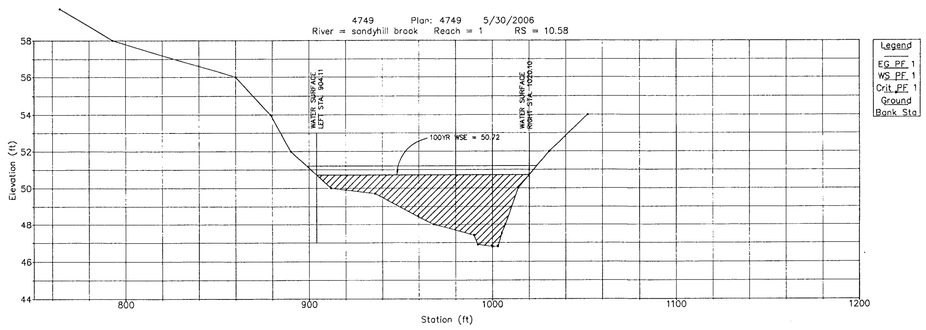

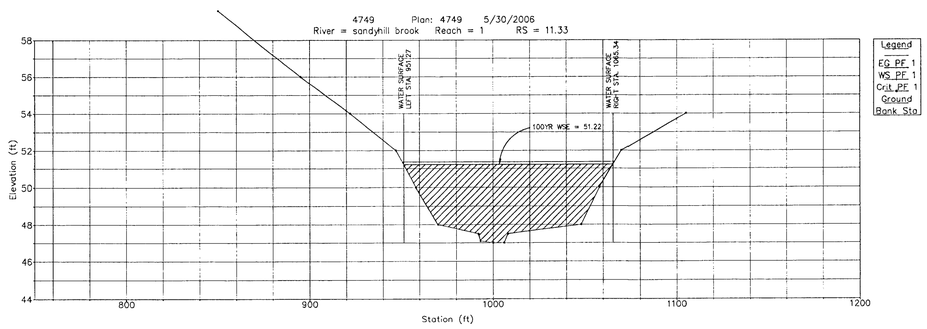

NO	DESCRIPTION	DATE	D/C

CREST
Engineering Associates Inc.
Civil & Environmental Engineers
Professional Planners · Surveyors · Landscape Architects
· CERTIFICATE OF AUTHORIZATION NO. 24GA27989300 ·

100 RIKE DRIVE
MILLSTONE TOWNSHIP
ENGLISHTOWN, N.J. 07726
Ph(609)448-5550

12 ROBBINS STREET
AT WALL STREET
FREEHOLD, N.J. 07728
Ph(732)462-8033
Fax(732)462-8043

MICHAEL B. KNOLL
PROFESSIONAL ENGINEER NJ LICENSE NO. 35271

DATE 3/28/06
SCALE 1"=40'
DRAWN PS
CHECKED MBK
SHEET 9 OF 12
POCKET

LOT 88
BLOCK 42

HOWELL TOWNSHIP
MONMOUTH COUNTY, NEW JERSEY

FILE N-4749

SANDY HILL BROOK
CROSS SECTIONS
& PROFILE

DWG. NO.
CAD FILE: 4749station-sec2.dwg
SHEET

LDS HW-PZ 10402073

SOIL EROSION AND SEDIMENT CONTROL NOTES

1. ALL SOIL EROSION AND SEDIMENT CONTROL PRACTICES TO BE INSTALLED PRIOR TO ANY MAJOR SOIL DISTURBANCE, OR IN THEIR PROPER SEQUENCE, AND MAINTAINED UNTIL PERMANENT PROTECTION IS ESTABLISHED.

2. ANY DISTURBED AREAS THAT WILL BE LEFT EXPOSED MORE THAN 30 (THIRTY) DAYS, AND NOT SUBJECT TO CONSTRUCTION TRAFFIC, WILL IMMEDIATELY RECEIVE A TEMPORARY SEEDING. IF THE SEASON PREVENTS THE ESTABLISHMENT OF A TEMPORARY COVER, THE DISTURBED AREAS WILL BE MULCHED WITH STRAW, OR EQUIVALENT MATERIAL, AT A RATE OF TWO (2) TONS PER ACRE, ACCORDING TO STATE STANDARDS.

3. PERMANENT VEGETATION TO BE SEEDED OR SODDED ON ALL EXPOSED AREAS WITHIN TEN (10) DAYS AFTER FINAL GRADING. MULCH TO BE USED AS NECESSARY FOR PROTECTION UNTIL SEEDING IS ESTABLISHED.

4. ALL WORK TO BE DONE IN ACCORDANCE WITH THE STANDARDS FOR SOIL EROSION AND SEDIMENT CONTROL IN NEW JERSEY.

5. A SUB-BASE COURSE WILL BE APPLIED IMMEDIATELY FOLLOWING ROUGH GRADING AND INSTALLATION OF IMPROVEMENTS IN ORDER TO STABILIZE STREETS, ROADS, DRIVEWAYS AND PARKING AREAS. IN AREAS WHERE NO UTILITIES ARE PRESENT, THE SUBBASE SHALL BE INSTALLED WITHIN 15 (FIFTEEN) DAYS OF THE PRELIMINARY GRADING.

6.* IMMEDIATELY FOLLOWING INITIAL DISTURBANCE OR ROUGH GRADING, ALL CRITICAL AREAS SUBJECT TO EROSION (I.E. STEEP SLOPES AND ROADWAY EMBANKMENTS) WILL RECEIVE A TEMPORARY SEEDING IN COMBINATION WITH STRAW MULCH OR A SUITABLE EQUIVALENT, AT A RATE OF TWO (2) TONS PER ACRE, ACCORDING TO STATE STANDARDS.

7.* ANY STEEP SLOPES RECEIVING PIPELINE INSTALLATION WILL BE BACKFILLED AND STABILIZED DAILY, AS THE INSTALLATION CONTINUES (I.E. SLOPES GREATER THAN 3:1).

8. THE STANDARD FOR STABILIZED CONSTRUCTION ENTRANCE REQUIRES THE INSTALLATION OF A 50' X 30' X 6" PAD OF 1 1/2" TO 2" STONE (OR WIDTH OF DRIVEWAY OR ROADWAY), AT ALL CONSTRUCTION DRIVEWAYS, IMMEDIATELY AFTER INITIAL SITE DISTURBANCE.

9. IN ACCORDANCE WITH THE STANDARDS FOR PERMANENT VEGETATIVE COVER FOR SOIL STABILIZATION, ALL SOILS HAVING A pH OF 4 OR LESS OR CONTAINING IRON SULFIDES SHALL BE COVERED WITH A MINIMUM OF 12 INCHES OF SOIL HAVING A pH OF 5 OR MORE PRIOR TO SEEDBED PREPARATION.

10. THE FREEHOLD SOIL CONSERVATION DISTRICT OFFICER SHALL BE NOTIFIED 72 HOURS IN ADVANCE OF ANY LAND DISTURBING ACTIVITY.

11. AT THE TIME WHEN THE SITE PREPARATION FOR PERMANENT VEGETATIVE STABILIZATION IS GOING TO BE ACCOMPLISHED, ANY SOIL THAT WILL NOT PROVIDE A SUITABLE ENVIRONMENT TO SUPPORT ADEQUATE VEGETATIVE GROUND COVER, SHALL BE REMOVED OR TREATED IN SUCH A WAY THAT WILL PERMANENTLY ADJUST THE SOIL CONDITIONS AND RENDER IT SUITABLE FOR VEGETATIVE GROUND COVER.

IF THE REMOVAL OR TREATMENT OF THE SOIL WILL NOT PROVIDE SUITABLE CONDITIONS, NON-VEGETATIVE MEANS OF PERMANENT GROUND STABILIZATION WILL HAVE TO BE EMPLOYED.

12. IN THAT N.J.S.A. 4:24-39 ET.SEQ. REQUIRES THAT NO CERTIFICATES OF OCCUPANCY BE ISSUED BEFORE THE PROVISIONS OF THE CERTIFIED PLAN FOR EROSION CONTROL HAVE BEEN COMPLIED WITH FOR PERMANENT MEASURES, ALL SITE WORK FOR SITE PLANS AND ALL WORK AROUND INDIVIDUAL LOTS IN SUBDIVISIONS, WILL HAVE TO BE COMPLETED PRIOR TO THE DISTRICT ISSUING A REPORT OF COMPLIANCE FOR THE ISSUANCE OF A CERTIFICATE OF OCCUPANCY BY THE MUNICIPALITY.

13. CONDUIT OUTLET PROTECTION MUST BE INSTALLED AT ALL REQUIRED OUTFALLS PRIOR TO THE DRAINAGE SYSTEM BECOMING OPERATIONAL.

14. ANY CHANGES TO THE CERTIFIED SOIL EROSION AND SEDIMENT CONTROL PLANS WILL REQUIRE THE SUBMISSION OF REVISED SOIL EROSION AND SEDIMENT CONTROL PLANS TO THE DISTRICT FOR RE-CERTIFICATION. THE RECORD PLANS MUST MEET ALL CURRENT STATE SOIL EROSION AND SEDIMENT CONTROL STANDARDS.

15. UNFILTERED DEWATERING IS NOT PERMITTED. TAKE ALL NECESSARY PRECAUTIONS DURING ALL DEWATERING OPERATIONS TO MINIMIZE SEDIMENT TRANSFER.

16. SHOULD THE CONTROL OF DUST AT THE SITE BE NECESSARY, THE SITE WILL BE SPRINKLED UNTIL THE SURFACE IS WET. TEMPORARY VEGETATIVE COVER SHALL BE ESTABLISHED OR MULCH SHALL BE APPLIED IN ACCORDANCE WITH STATE STANDARDS FOR EROSION CONTROL.

17. ALL SOIL WASHED, DROPPED, SPILLED, OR TRACKED OUTSIDE THE LIMIT OF DISTURBANCE OR ONTO PUBLIC RIGHTS-OF-WAY WILL BE REMOVED IMMEDIATELY.

18. THE PROPERTY OWNER SHALL BE RESPONSIBLE FOR ANY EROSION OR SEDIMENTATION THAT MAY OCCUR BELOW STORM WATER OUTFALLS OR OFFSITE AS A RESULT OF CONSTRUCTION OF THE PROJECT.

19. STOCKPILE AND STAGING LOCATIONS DETERMINED IN THE FIELD, SHALL BE PLACED WITHIN THE LIMIT OF DISTURBANCE ACCORDING TO THE CERTIFIED PLAN. STAGING AND AND STOCKPILES NOT LOCATED WITHIN THE LIMIT OF DISTURBANCE WILL REQUIRE CERTIFICATION OF A REVISED SOIL EROSION AND SEDIMENT CONTROL PLAN. THE DISTRICT RESERVES THE RIGHT TO DETERMINE WHEN CERTIFICATION OF A NEW AND SEPERATE SOIL EROSION AND SEDIMENT CONTROL PLAN WILL BE REQUIRED FOR THESE ACTIVITIES.

20. ALL SOIL STOCKPILES ARE TO BE TEMPORARILY STABILIZED IN ACCORDANCE WITH SOIL EROSION AND SEDIMENT CONTROL NOTE #2.

*OPSOILING SCHEDULE

1. TOPSOIL TO BE LOAMY, HIGH IN ORGANIC MATTER, FRIABLE, FREE OF DEBRIS, WEEDS, STONES, AND CONTAIN NO TOXIC SUBSTANCES HARMFUL TO PLANTS.

2. THE pH RANGE TO BE 5.0 TO 7.5. SOLUBLE SALTS SHOULD NOT BE EXCESSIVE (CONDUCTIVITY LESS THAN 0.5 MILLIMOHS PER CENTIMETER). OFFSITE TOPSOIL TO HAVE A MINIMUM ORGANIC MATTER CONTENT OF 2.75% (IT MAY BE RAISED BY ADDITIVES, HUMUS, PEATMOSS, ETC.).

3. PREPARE SITE TO PERMIT USE OF CONVENTIONAL EQUIPMENT FOR SEEDBED PREPARATION AS PER PERMANENT OR TEMPORARY VEGETATIVE STANDARDS. TEST SUBSOIL FOR LIME REQUIREMENT AND RAISE pH LEVEL TO 6.5 AND WORK INTO SUBSOIL TO A DEPTH OF 4 (FOUR) INCHES.

4. INSTALL REQUIRED EROSION CONTROL PRACTICES AND FACILITIES.

5. SCARIFY SURFACE OF SOIL PRIOR TO APPLYING TOPSOIL. HANDLE TOPSOIL ONLY WHEN IT IS DRY ENOUGH TO PREVENT DAMAGING THE SOIL STRUCTURE.

6. INSTALL AT A DEPTH OF 5 (FIVE) INCHES (UNSETTLED).

7. ALTERNATE: INSTALL AT A DEPTH OF 12 (TWELVE) INCHES TO COVER SOILS HAVING A pH OF 4.0 OR LESS (OR CONTAINING IRON SULFIDE).

STANDARD FOR TEMPORARY VEGETATIVE COVER FOR SOIL STABILIZATION

1. Site Preparation

Grade as needed and feasible to permit the use of conventional equipment for seedbed preparation, seeding, mulch application, and mulch anchoring. All grading should be done in accordance with Standards for Land Grading, pp. 19-1 of standards for S.E.S.C. in N.J.

Install needed erosion control practices or facilities such as diversions, grade stabilization structures, channel stabilization measures, sediment basins, and waterways. See Standards 11 through 42.

Immediately prior to seeding, the surface should be scarified 6" to 12" where there has been soil compaction. This practice is permissible only where there is no danger to underground utilities (cables, irrigation systems, etc.).

2. Seedbed Preparation

A. Apply ground limestone and fertilizer according to soil test recommendations such as offered by Rutgers Co-operative Extension. Soil sample makes are available from the local Rutgers Cooperative Extension offices. Fertilizer shall be applied at the rate of 500 pounds per acre or 11 pounds per 1,000 square feet of 10-20-10 or equivalent with 50% water insoluble nitrogen unless a soil test indicates otherwise. Apply limestone at the rate of 2 tons/acre unless soil testing indicates otherwise. Calcium carbonate is the equivalent and standard for measuring the ability of liming materials to neutralize soil acidity and supply calcium and magnesium to grasses and legumes. Table 7-1 is a general guideline for limestone application.

TABLE 7-1

Limestone 1 Application Rate by Soil Texture

SOIL TEXTURE	SOIL TEXTURE TONS/ACRE	LBS/1000 S.F.
Clay, clay loam, and high organic soil	3	135
Sandy loam, loam, silt loam	2	90
Loamy sand and sand	1	45

1. Pulverized dolomitic limestone is preferred for most soils south of the New Brunswick-Trenton line.

B. Work lime and fertilizer into the soil as nearly as practical to a depth of 4 inches with a disc, springtooth harrow, or other suitable equipment. The final harrowing or disking operation should be on the general contour. Continue tillage until a reasonable uniform seedbed is prepared.

C. Inspect seedbed just before seeding. If traffic has left the soil compacted, the area must be retilled in accordance with the above.

D. Soils high in sulfides or having a pH of 4 or less refer to Standard for Management of High Acid Producing Soils, pg. 1-1of Standards for S.E.S.C. in N.J.

3. Seeding

A. SEED SELECTIONS

	RATE (1) LB/AC	LB/1000 S.F.	DATE (2)(3) ZONE 5b, 6a	ZONE 7a, b	DEPTH (4) INCHES
COOL SEASON GRASSES					
PERENNIAL RYEGRASS	100	1.0	3/15-6/1 8/1-9/15	3/1-5/15 8/15-10/1	2/15-5/1 8/15-10/15	0.5
SPRING OATS	86	2.0	3/15-6/1 8/1-9/15	3/1-5/15 8/15-10/1	2/15-5/1 8/15-10/15	1.0
WINTER BARLEY	96	2.2	8/1-9/15	8/15-10/1	8/15-10/15	1.0
WINTER CEREAL RYE	112	2.8	8/1-11/1	8/1-11/15	8/15-12/15	1.0
WARM SEASON GRASSES						
PEARL MILLET	20	0.5	6/1-8/1	5/15-8/15	5/1-9/1	1.0
MILLET (GERMAN OR HUNGARIAN)	30	0.7	6/1-8/1	5/15-8/15	5/1-9/1	1.0
WEEPING LOVEGRASS	5	0.2	6/1-8/1	5/15-8/15	5/1-9/1	0.25

1. Seeding rate for warm season grass, selections 5 - 7 shall be adjusted to reflect the amount of Pure Line Seed (PLS) as determined by a germination test result. No adjustment is required for cool season grasses. 2. May be planted throughout summer if soil moisture is adequate or seeded area can be irrigated. 3. Plant Hardiness Zone (see figure 7-1, pg. 7-4.) 4. Twice the depth for sandy soils

B. Conventional Seeding. Apply seed uniformly by hand, cyclone (centrifugal) seeder, drop seeder, drill or cultipacker seeder. Except for drilled, hydroseeded or cultipacked seedings, seed shall be incorporated into the soil, to a depth of 1/4 to 1/2 inch, by raking or dragging. Depth of seed placement may be 1/4 inch deeper on coarse textured soil.

C. Hydroseeding is a broadcast seeding method usually involving a truck or trailer mounted tank, with an agitation system and hydraulic pump for mixing seed, water and fertilizer and spraying the mix onto the prepared seedbed. Mulch shall not be included in the tank with seed. Short fibered mulch may be applied with a hydroseeder following seeding. (also see Section IV Mulching) Hydroseeding is not a preferred seeding method because seed and fertilizer are applied to the surface and not incorporated into the soil. Poor seed to soil contact occurs reducing seed germination and growth. Hydroseeding may be used for areas too steep for conventional equipment to traverse or too obstructed with rocks, stumps, etc.

D. After seeding, firming the soil with a corrugated roller will assure good seed-to-soil contact, restore capillarity, and improve seedling emergence. This is the preferred method. When performed on the contour, sheet erosion will be minimized and water conservation on site will be maximized.

4. Mulching

Mulching is required on all seeding. Mulch will insure against erosion before grass is established and will promote faster and earlier establishment. The existence of vegetation sufficient to control soil erosion shall be deemed compliance with this mulching requirement.

A. Straw or Hay: Unrotted small grain straw, hay free of seeds, or salt hay to be applied at the rate of 1-1/2 to 2 tons per acre (70 to 90 pounds per 1,000 square feet), except that where a crimper is used instead of a liquid mulch-binder (tackifying or adhesive agent), the rate of application is 3 tons per acre. Mulch chopper-blowers must not grind the mulch. Hay mulch is not recommended for establishing fine turf or lawns due to the presence of weed seed.

Application: Spread mulch uniformly by hand or mechanically so that approximately 85% of the soil surface will be covered. For uniform distribution of hand-spread mulch, divide area into approximately 1,000 square feet sections and distribute 70 to 90 pounds within each section.

Anchoring: shall be accomplished immediately after placement to minimize loss by wind or water. This may be done by one of the following methods, depending upon the size of the area, steepness of slopes, and costs.

1. Peg and Twine. Drive 8 to 10 inch wooden pegs to within 2 to 3 inches of the soil surface every 4 feet in all directions. Stakes may be driven before or after applying mulch. Secure mulch to soil surface by stretching twine between pegs in a criss-cross and a square pattern. Secure twine around each peg with two or more round turns.

2. Mulch Nettings - Staple paper, jute, cotton, or plastic nettings to the soil surface. Use a degradable netting in areas to be mowed.

3. Crimper (mulch anchoring coulter tool). A tractor-drawn implement, somewhat like a disc harrow, especially designed to push or cut some of the broadcast long fiber mulch 3 to 4 inches into the soil so as to anchor it and leave part standing upright. This technique is limited to area traversable by a tractor, which must operate on the contour of slopes. Straw mulch rate must be 3 tons per acre. No tackifying or adhesive agent is required.

4. Liquid Mulch-Binders. - May be used to anchor salt hay, hay or straw mulch.

a. Applications should be heavier at edges where wind may catch the mulch, in valleys, and at crests of banks. The remainder of the area should be uniform in appearance.

b. Use one of the following:

(1) Emulsified asphalt - (SS-1, CSS-1, CMS-2, MS-2, RS-1, RS-2, CRS-1, and CRS2). Apply 0.04 gal./sq./yd. or 194 gal./ton on flat areas and on slopes less than 8 feet or more high, use 0.075 gal./sq. yd. or 363 gal./ton. These materials may be difficult to apply uniformly and will discolor surfaces.

(2) Organic and Vegetable Based Binders - Naturally occurring, powder based, hydrophilic materials when mixed with water formulates a gel and when applied to mulch under satisfactory curing conditions will form membranes of insoluble polymers. The vegetable gel shall be physiologically harmless and not result in a phytotoxic effect or impede growth of turfgrass. Use at rates and weather conditions as recommended by the manufacturer to anchor mulch materials. Many new products are available, some of which may need further evaluation for use in this state.

(3) Synthetic Binders - High polymer synthetic emulsion, miscible with water when diluted and following application to mulch, drying and curing shall no longer be soluble or dispersible in water. It shall be applied at rates recommended by the manufacturer and remain tacky until germination of grass.

Note: All names given above are registered trade names. This does not constitute a recommendation of these products to the exclusion of other products.

B. Wood-fiber or paper-fiber mulch. Shall be made from wood, plant fibers or paper containing no growth or germination inhibiting materials, used at the rate of 1,500 pounds per acre (or as recommended by the product manufacturer) and may be applied by a hydroseeder. This mulch shall not be mixed in the tank with seed. Use in fertile areas only unless soil analysis indicates otherwise. Apply fertilizer at the rate of 50-75 lbs/1,000 square feet and activated with 0.2 to 0.4 inches of water after spreading pelletized mulch on the seed bed is extremely important for sufficient activation and expansion of the mulch to provide soil coverage.

C. Pelletized mulch, compressed and extruded paper and/or wood fiber product, which may contain co-polymers, tackifiers, fertilizers and coloring agents. The dry pellets, when applied to a seeded area and watered, form mulch mat. Pelletized mulch shall be applied in accordance with the manufacturers recommendations. Mulch may be applied by hand or mechanical spreader at the rate of 50-75 lbs/1,000 square feet and activated with 0.2 to 0.4 inches of water after spreading pelletized mulch on the seed bed is extremely important for sufficient activation and expansion of the mulch to provide soil coverage.

5. Irrigation (where feasible)

If soil moisture is deficient, and mulch is not used, supply new seedings with adequate water (a minimum of 1/4 inch twice a day until vegetation is well established). This is especially true when seedings are made in abnormally dry or hot weather or on droughty sites.

6. Topdressing

Since slow release nitrogen fertilizer (water insoluble) is prescribed in Section II, A. Seedbed Preparation in this Standard, no follow-up ofsupdressing is mandatory. An exception may be made where gross nitrogen deficiency exists to the extent that turf failure may develop. In that instance, topdress with 10-10-10 or equivalent at 400 pounds per acre or 10 pounds per 1,000 square feet.

7. Establishing Permanent Vegetative Stabilization

The quality of permanent vegetation rests with the contractor. The timing of seeding, preparing the seedbed, applying fertilizer, mulch, and other management are essential. The seed application rates in Table 4-3 (pg. 4-7) are required when a Report of Compliance is requested prior to actual establishment of permanent vegetation. Up to 50% reduction in specified rates may be allowed for permanent vegetation in supplemental plantings of an existing stand. Establishing permanent vegetation means 80% vegetative coverage with the specified seed mixture for the seeded area and mowed once.

2. Warm season mixtures are grasses and legumes which maximize growth at high temperatures, generally 85° F and above. See Table 4-3 (pg.4-7), mixtures 1 to 7. Planting rates for warm season grasses shall be the amount of Pure Live Seed (PLS) as determined by germination testing results.

3. Cool Season Mixtures are grasses and legumes which maximize growth at temperatures below 85oF. Many grasses become active at 65oF. See Table 3, mixtures 8-20. Adjustment of planting rates to compensate for the amount of Pure Live Seed is not required for cool season grasses.

B. Conventional Seeding is performed by applying seed uniformly by hand, cyclone (centrifugal) seeder, drop seeder, drill or cultipacker seeder. Except for drilled, hydroseeded or cultipacked seedings, seed shall be incorporated into the soil within 24 hours of seedbed preparation to a depth of 1/4 to 1/2 inch, by raking or dragging. Depth of seed placement may be 1/4 inch deeper on coarse textured soil.

C. Hydroseeding is a broadcast seeding method usually involving a truck or trailer mounted tank, with an agitation system and hydraulic pump for mixing seed, water and fertilizer and spraying the mix onto the prepared seedbed. Mulch shall not be included in the tank with seed. Short fibered mulch may be applied with a hydroseeder following seeding. (also see Section IV Mulching) Hydroseeding is not a preferred seeding method because seed and fertilizer are applied to the surface and not incorporated into the soil. Poor seed to soil contact occurs reducing seed germination and growth. Hydroseeding may be used for areas too steep for conventional equipment to traverse or too obstructed with rocks, stumps, etc.

D. After seeding, firming the soil with a corrugated roller will assure good seed-to-soil contact, restore capillarity, and improve seedling emergence. This is the preferred method. When performed on the contour, sheet erosion will be minimized and water conservation on site will be maximized.

4. Mulching

Mulching is required on all seeding. Mulch will insure against erosion before grass is established and will promote faster and earlier establishment. The existence of vegetation sufficient to control soil erosion shall be deemed compliance with this mulching requirement.

A. Straw or Hay: Unrotted small grain straw, hay free of seeds, or salt hay to be applied at the rate of 1-1/2 to 2 tons per acre (70 to 90 pounds per 1,000 square feet), except that where a crimper is used instead of a liquid mulch-binder (tackifying or adhesive agent), the rate of application is 3 tons per acre. Mulch chopper-blowers must not grind the mulch. Hay mulch is not recommended for establishing fine turf or lawns due to the presence of weed seed.

Application: Spread mulch uniformly by hand or mechanically so that approximately 85% of the soil surface will be covered. For uniform distribution of hand-spread mulch, divide area into approximately 1,000 square feet sections and distribute 70 to 90 pounds within each section.

Anchoring: shall be accomplished immediately after placement to minimize loss by wind or water. This may be done by one of the following methods, depending upon the size of the area, steepness of slopes, and costs.

1. Peg and Twine. Drive 8 to 10 inch wooden pegs to within 2 to 3 inches of the soil surface every 4 feet in all directions. Stakes may be driven before or after applying mulch. Secure mulch to soil surface by stretching twine between pegs in a criss-cross and a square pattern. Secure twine around each peg with two or more round turns.

2. Mulch Nettings - Staple paper,jute, cotton, or plastic nettings to the soilsurface. Use a degradable netting in areas to be mowed.

Management of High Acid Producing Soils

High acid producing soils may be present in undisturbed soils at varying depths including near the soil surface to excavations or deep disturbances. Its presence on a site may be significant or limited in the subprofile. High acid producing soils are commonly black, dark brown, gray or greenish with silvery pyrite or marcasite nuggets or flakes. Alternatively, sandy soils of reddish, yellowish or light to medium brown soil materials are usually free of high acid producing deposits.

Methods and Materials

1. Limit the excavation area and exposure time when high acid producing soils are encountered.

2. Topsoil stripped from the site shall be stored separately from temporarily stockpiled high acid producing soils.

3. Stockpiles of high acid producing soil should be located on level land to minimize its movement, especially when this material has a high clay content.

4. Temporarily stockpiled high acid producing soil material to be exposed more than 30 days should be covered with properly anchored, heavy grade sheets of polyethylene where possible. If not possible, stockpiles shall be covered with a minimum of 3 to 6 inches of wood chips to minimize erosion of the stockpile. Silt fence shall be installed at the toe of slope to contain movement of the stockpiled material. Topsoil shall not be applied to the stockpiles to prevent topsoil contamination with high acid producing soils.

5. High acid producing soils with a pH +6 or less, or containing iron sulfide, (including borrow from cuts) shall be ultimately placed or buried with limestone applied at the rate of 6 tons per acre (or 275 pounds per 1,000 square feet of surface area) and covered with a minimum of 12 inches of settled soil with a pH of 5 or more except as follows:

a. Areas where trees or shrubs are to be planted shall be covered with a minimum of 24 inches of soil with a pH of 5 or more.

b. Disposal areas shall not be located within 24 inches of any surface of a slope or basin such as berms, stream banks, drainage ways, shall be graded and will discolor surfaces leaching damages.

6. Equipment used for movement of high acid producing soils should be cleaned at the end of each day to prevent spreading of high acid soil materials to other parts of the site, into streams or stormwater conveyances and to protect machinery from accelerated rusting.

7. Non vegetative erosion control practices (stone tracking pads, strategically placed limestone check dam, silt fence, wood chips) should be installed to limit the movement of high acid producing soils from, around or off the site.

8. Following burial or removal of high acid producing soil, topsoiling and seeding of the site, (see Temporary Vegetative Cover for Soil Stabilization , pg. 4-1 and Topsoiling, pg. 8-1.) monitoring should continue for approximately 6 to 12 months to assure there is adequate stabilization and that no high acid soil problems emerge. If problems still exist the affected area must be treated as indicated above to correct the problem.

9. Monitoring of areas where high acid producing soil has been placed or buried should be performed for at least 2 years or longer if problems occur, to assure there is no migration of potential acid materials.

STANDARD FOR PERMANENT VEGETATIVE COVER FOR SOIL STABILIZATION

1. Site Preparation

Grade as needed and feasible to permit the use of conventional equipment for seedbed preparation, seeding, mulch application, and mulch anchoring. All grading should be done in accordance with Standards for Land Grading, p. 19-1 of standards for S.E.S.C. in N.J.

B. Immediately prior to seeding and topsoil application, the surface should be scarified 6" to 12" where there has been soil compaction. This practice is permissible only where there is no danger to underground utilities (cables, irrigation systems, etc.).

C. Install needed erosion control practices or facilities such as diversions, grade stabilization structures, channel stabilization measures, sediment basins, and waterways. See Standards 11 through 42.

2. Seedbed Preparation

A. Apply ground limestone and fertilizer according to soltest recommendations such as offered by Rutgers Co-operative Extension. Soil sample mailers are available from the local Rutgers Cooperative Extension offices. Fertilizer shall be applied at the rate of 500 pounds per acre or 11 pounds per 1,000 square feet of 10-20-10 or equivalent with 50% water insoluble nitrogen unless a soil test indicates otherwise. Apply limestone in accordance with Table 4-1, pg 4-3 and the results of soltesting. Calcium carbonate is the equivalent and standard for measuring the ability of liming materials to neutralize soil acidity and supply calcium and magnesium to grasses and legumes. Table 4-1 is a general guideline for limestone application rates.

Table 4- 1 Limestone * Application Rate by Soil Texture

SOIL TEXTURE	TONS/ACRE	LBS./1000 SQ. FT.
Clay, clay loam, and high organic soil	3	135
Sandy loam, loam, silt loam	2	90
Loamy sand, sand	1	45

* Pulverized dolomitic limestone is preferred for most soils south of the New Brunswick-Trenton line.

B. Work lime and fertilizer into the soil as nearly as practical to a depth of 4 inches with a disc, springtooth harrow, or other suitable equipment. The final harrowing or disking operation should be on the generalcontour. Continue tillage until a reasonable uniform seedbed is prepared.

C. Immediately prior to seeding, the surface should be scarified 6" to 12" where there has been soil compaction. This practice is permissible only where there is no danger to underground utilities (cables, irrigation systems, etc.).

D. High acid producing soil.

Soils having pH of 4 or less or containing iron sulfide shall be covered with aminimum of 12 inches of soil having a pH of 5 or more before initiating seedbed preparation. See Standard for Management of High Acid Producing Soils, pg. 1-1.

3. Seeding

A. Select a mixture from Table 4-3 (pg. 4-7) or use mixture recommended by Rutgers Cooperative Extension or Natural Resources Conservation Service which is approved by the Soil Conservation District. Seed germination shall have been tested within 12 months of the planting date. No seed shall be accepted with a germination test date more than 12 months old unless retested.

1. Seeding rates specified are required when a report of compliance is requested prior to actual establishment of permanent vegetation. Up to 50% reduction in rates may be used when permanent vegetation is established prior to a report of compliance inspection. Use these rates only to all methods of seeding. Establishing permanent vegetation means 80% vegetative coverage with the specified seed mixture for the seeded area and mowed once.

2. Warm season mixtures are grasses and legumes which maximize growth at high temperatures, generally 85° F and above. See Table 4-3 (pg.4-7), mixtures 1 to 7. Planting rates for warm season grasses shall be the amount of Pure Live Seed (PLS) as determined by germination testing results.

3. Cool Season Mixtures are grasses and legumes which maximize growth at temperatures below 85oF. Many grasses become active at 65oF. See Table 3, mixtures 8-20. Adjustment of planting rates to compensate for the amount of Pure Live Seed is not required for cool season grasses.

B. Conventional Seeding is performed by applying seed uniformly by hand, cyclone (centrifugal) seeder, drop seeder, drill or cultipacker seeder. Except for drilled, hydroseeded or cultipacked seedings, seed shall be incorporated into the soil within 24 hours of seedbed preparation to a depth of 1/4 to 1/2 inch, by raking or dragging. Depth of seed placement may be 1/4 inch deeper on coarse textured soil.

C. Hydroseeding is a broadcast seeding method usually involving a truck or trailer mounted tank, with an agitation system and hydraulic pump for mixing seed, water and fertilizer and spraying the mix onto the prepared seedbed. Mulch shall not be included in the tank with seed. Short fibered mulch may be applied with a hydroseeder following seeding. (also see Section IV Mulching) Hydroseeding is not a preferred seeding method because seed and fertilizer are applied to the surface and not incorporated into the soil. Poor seed to soil contact occurs reducing seed germination and growth. Hydroseeding may be used for areas too steep for conventional equipment to traverse or too obstructed with rocks, stumps, etc.

D. After seeding, firming the soil with a corrugated roller will assure good seed-to-soil contact, restore capillarity, and improve seedling emergence. This is the preferred method. When performed on the contour, sheet erosion will be minimized and water conservation on site will be maximized.

4. Mulching

Mulching is required on all seeding. Mulch will insure against erosion before grass is established and will promote faster and earlier establishment. The existence of vegetation sufficient to control soil erosion shall be deemed compliance with this mulching requirement.

A. Straw or Hay: Unrotted small grain straw, hay free of seeds, or salt hay to be applied at the rate of 1-1/2 to 2 tons per acre (70 to 90 pounds per 1,000 square feet), except that where a crimper is used instead of a liquid mulch-binder (tackifying or adhesive agent), the rate of application is 3 tons per acre. Mulch chopper-blowers must not grind the mulch. Hay mulch is not recommended for establishing fine turf or lawns due to the presence of weed seed.

Application: Spread mulch uniformly by hand or mechanically so that approximately 85% of the soil surface will be covered. For uniform distribution of hand-spread mulch, divide area into approximately 1,000 square feet sections and distribute 70 to 90 pounds within each section.

Anchoring: shall be accomplished immediately after placement to minimize loss by wind or water. This may be done by one of the following methods, depending upon the size of the area, steepness of slopes, and costs.

1. Peg and Twine. Drive 8 to 10 inch wooden pegs to within 2 to 3 inches of the soil surface every 4 feet in all directions. Stakes may be driven before or after applying mulch. Secure mulch to soil surface by stretching twine between pegs in a criss-cross and a square pattern. Secure twine around each peg with two or more round turns.

2. Mulch Nettings - Staple paper,jute, cotton, or plastic nettings to the soilsurface. Use a degradable netting in areas to be mowed.

3. Crimper (mulch anchoring coulter tool) - A tractor-drawn implement, somewhat like a disc harrow, especially designed to push or cut some of the broadcast long fiber mulch 3 to 4 inches into the soil so as to anchor it and leave part standing upright. This technique is limited to area traversable by a tractor, which must operate on the contour of slopes. Straw mulch rate must be 3 tons per acre. No tackifying or adhesive agent is required.

4. Liquid Mulch-Binders - May be used to anchor salt hay, hay or straw mulch.

a. Applications should be heavier at edges where wind may catch the mulch, in valleys, and at crests of banks. The remainder of the area should be uniform in appearance.

b. Use one of the following:

(1) Emulsified asphalt -(SS-1, CSS-1, CMS-2, MS-2, RS-1, RS-2, CRS-1, and CRS2). Apply 0.04 gal./sq./yd. or 194 gal./ton on flat areas and on slopes less than 8 feet or more high, use 0.075 gal./sq. yd. or 363 gal./ton. These materials may be difficult to apply uniformly and will discolor surfaces.

(2) Organic and Vegetable Based Binders - Naturally occurring, powder based, hydrophilic materials when mixed with water formulates a gel and when applied to mulch under satisfactory curing conditions will form membranes of insoluble polymers. The vegetable gel shall be physiologically harmless and not result in a phytotoxic effect or impede growth of turfgrass. Use at rates and weather conditions as recommended by the manufacturer to anchor mulch materials. Many new products are available, some of which may need further evaluation for use in this state.

(3) Synthetic Binders - High polymer synthetic emulsion, miscible with water when diluted and following application to mulch, drying and curing shall no longer be soluble or dispersible in water. It shall be applied at rates recommended by the manufacturer and remain tacky until germination of grass.

Note: All names given above are registered trade names. This does not constitute a recommendation of these products to the exclusion of other products.

B. Wood-fiber or paper-fiber mulch. Shall be made from wood, plant fibers or paper containing no growth or germination inhibiting materials, used at the rate of 1,500 pounds per acre (or as recommended by the product manufacturer) and may be applied by a hydroseeder. This mulch shall not be mixed in the tank with seed. Use in fertile areas only unless soil analysis indicates otherwise. Apply fertilizer at the rate of 50-75 lbs/1,000 square feet and activated with 0.2 to 0.4 inches of water after spreading pelletized mulch on the seed bed is extremely important for sufficient activation and expansion of the mulch to provide soil coverage.

C. Pelletized mulch, compressed and extruded paper and/or wood fiber product, which may contain co-polymers, tackifiers, fertilizers and coloring agents. The dry pellets, when applied to a seeded area and watered, form mulch mat. Pelletized mulch shall be applied in accordance with the manufacturers recommendations. Mulch may be applied by hand or mechanical spreader at the rate of 50-75 lbs/1,000 square feet and activated with 0.2 to 0.4 inches of water after spreading pelletized mulch on the seed bed is extremely important for sufficient activation and expansion of the mulch to provide soil coverage.

5. Irrigation (where feasible)

If soil moisture is deficient, and mulch is not used, supply new seedings with adequate water (a minimum of 1/4 inch twice a day until vegetation is well established). This is especially true when seedings are made in abnormally dry or hot weather or on droughty sites.

6. Topdressing

Since slow release nitrogen fertilizer (water insoluble) is prescribed in Section II, A. Seedbed Preparation in this Standard, no follow-up ofsupdressing is mandatory. An exception may be made where gross nitrogen deficiency exists to the extent that turf failure may develop. In that instance, topdress with 10-10-10 or equivalent at 400 pounds per acre or 10 pounds per 1,000 square feet.

7. Establishing Permanent Vegetative Stabilization

The quality of permanent vegetation rests with the contractor. The timing of seeding, preparing the seedbed, applying fertilizer, mulch, and other management are essential. The seed application rates in Table 4-3 (pg. 4-7) are required when a Report of Compliance is requested prior to actual establishment of permanent vegetation. Up to 50% reduction in specified rates may be allowed for permanent vegetation in supplemental plantings of an existing stand. Establishing permanent vegetation means 80% vegetative cover (ofthe seeded species) and mowed once.

8. Permanent Seeding

Seed is to be uniformly applied to the normal depth of 1/4" to 1/2" (except hydro seeding). Type 15 seed will be used at the following rates for the mixture:

a. Hard Fescue @ 120 lbs./acre of 2.7 lbs./1,000 sq. ft.
b. Perennial Ryegrass @ 30 lbs./acre or 0.7 lbs./1,000 sq. ft.
c. Kentucky Bluegrass (Blend) @ 40 lbs./acre of 0.9 lbs./1,000 sq. ft.

Seeding Dates:
Seeding Dates 2/1 to 4/30 and 8/15 to 11/30.

OPERATION	BEGIN DATE	END DATE
1. INSTALL STABILIZED CONSTRUCTION ENTRANCES AS SHOWN.		2 DAYS
2. INSTALL STAKED STRAW BALES OR SEDIMENT BARRIER AS SHOWN.		2 DAYS
3. DETERMINE TEMPORARY STOCKPILE LOCATION		1 DAY
4. CONSTRUCT BASIN (INCLUDE PERMANENT STABILIZATION. CONSTRUCT UNDERGROUND DETENTION SYSTEM		2 WEEKS
5. ROUGH GRADE SITE, INSTALL INTERMEDIATE GRAVEL PADS, AS SHOWN.		N/A
6. INSTALL UTILITIES. CURBING & PAVEMENT. PROTECT INLETS AS SHOWN. PERFORM INITIAL LOT GRADING AND TEMPORARY STABILIZATION OF STOCKPILES.		3 WEEKS
7. CONSTRUCT BUILDING IN ACCORDANCE WITH TYPICAL EROSION CONTROL PLANS		N/A
8. CONSTRUCT SIDEWALKS. FINISH GRADE DISTURBED AREAS. MULCH, FERTILIZE AND SEED IN ACCORDANC

SOIL EROSION AND SEDIMENT CONTROL NOTES

1. The Freehold Soil Conservation District shall be notified 72 hours in advance of any land disturbing activity.

2. All work to be done in accordance with the Standards for Soil Erosion and Sediment Control in New Jersey.

3. All soil erosion and sediment control practices to be installed prior to any major soil disturbance, or in their proper sequence, and maintained until permanent protection is established.

4. Any changes to the Certified Soil Erosion and Sediment Control Plans will require the submission of revised soil erosion and sediment control plans to the District for re-certification. The revised plans must meet all current soil soil erosion and sediment control standards.

5. In that N.J.S.A. 4:24-39 ET. SEQ. requires that no Certificates of Occupancy be issued before the provisions of the Certified Plan for erosion control have been complied with for permanent measures, all site work and all work around individual lots in subdivision will have to be completed prior to the District issuing a report of compliance for the issuance of a Certificate of Occupancy by the municipality.

6. Any disturbed areas that will be left exposed more than 30 (thirty) days, and not subject to construction traffic, will immediately receive a temporary seeding. If the season prevents the establishment of a temporary cover, the disturbed areas will be mulched with straw, or equivalent material, at a rat of 2 to 2-1/2 tons per acre, according to state standards for stabilization with mulch only.

7. Immediately following initial disturbance or rough grading, all critical areas subject to erosion (i.e., steep slopes and roadway embankments) will receive temporary seeding in combination with straw mulch or a suitable equivalent, at a rate of 1-2 2 tons per acre, according to state standards.

8. A sub-base course will be applied immediately following rough grading and installation of improvements to stabilize streets, roads, driveway and parking areas. In areas where no utilities are present, the sub-base shall be installed within 15 (fifteen) days of the preliminary grading.

9. Any steep slopes receiving pipeline installation will be backfilled and stabilized daily, as the installation continues (i.e., slopes greater than 3:1).

10. The standard for stabilized construction access requires the installation of a pad of clean crushed stone, at points where traffic will be accessing the construction site. After interior roadways are paved, individual lots require a stabilized construction entrance consisting of one inch to two inches (1" - 2") stone for a minimum length of ten (10) feet equal to the lot entrance width. All other access points shall be blocked off.

11. All soil washed, dropped, spilled, or tracked outside the limit of disturbance of onto public right-of-ways will be removed immediately.

12. Permanent vegetation is to be seeded or sodded on all exposed areas within ten (10) days after final grading.

13. At the time when the site preparation for permanent vegetative stabilization is going to be accomplished, any soil that will not provide a suitable environment to support adequate vegetative ground cover, shall be removed or treated in such a way that it will permanently adjust the soil conditions and render it suitable for vegetative ground cover.

If the removal or treatment of the soil will not provide suitable conditions, non-vegetative meanest permanent ground stabilization will have to be employed.

14. In accordance with the Standard for Management of High Acid Producing Soils, any soil having a pH of 4 or less or containing iron sulfide shall be covered with a minimum of twelve (12) inches of soil having a pH of 5 or more prior to installed preparation. Areas where trees or shrubs are to be planted shall be covered with a minimum of twenty-four (24) inches of soil having a pH of 5 or more.

15. Conduit outlet protection must be installed at all required outfalls prior to the drainage system becoming operational.

16. Unfiltered dewatering is not permitted. Necessary precautions must be taken during all dewatering operations to minimize sediment transfer. Any dewatering methods used must be in accordance with the Standard for Dewatering.

17. Shout the control of dust at the site be necessary, the site will be sprinkled until the surface is wet, temporary vegetation cover shall be established or mulch shall be applied, as required by the Standard for Dust Control.

18. Stockpile and staging locations established in the field shall be placed within the limit of disturbance according to the Certified Plan, staging and stockpiles not located within the limit of disturbance will require certification of a revised Soil Erosion and Sediment Control Plan. Certification of a new Soil Erosion and Sediment Control Plan may be required for these activities if an area greater than 5,000 S.F. is disturbed.

19. All soil stockpiles are to be temporarily stabilized in accordance with Soil Erosion and Sediment Control Note #6.

20. The property owner shall be responsible for an erosion or sedimentation that may occur below stormwater outfalls or offsite as a result of construction of the project.

21. If anywhere gabion baskets or reno mattresses are needed for channelization, stabilization or conduit outlet protection, the wire must be pvc coated and meet New Jersey Soil Erosion and Sediment Control Standards.

TOPSOIL SCHEDULE

1. TOPSOIL TO BE LOAMY, HIGH IN ORGANIC MATTER, FRIABLE, FREE OF DEBRIS, WEEDS, STONES, AND CONTAIN NO TOXIC SUBSTANCES HARMFUL TO PLANTS.

2. THE pH RANGE TO BE 5.0 TO 7.5. SOLUBLE SALTS SHOULD NOT BE EXCESSIVE (CONDUCTIVITY LESS THAN 0.5 MILLIMOLES PER CENTIMETER). OFFSITE TOPSOIL TO HAVE A MINIMUM ORGANIC MATTER CONTENT OF 2.75% (IT MAY BE RAISED BY ADDITIVES, HUMUS, PEATMOSS, ETC.).

3. PREPARE SITE TO PERMIT USE OF CONVENTIONAL EQUIPMENT FOR SEEDBED PREPARATION AS PER PERMANENT OR TEMPORARY VEGETATIVE STANDARDS. TEST SUBSOIL FOR LIVE REQUIREMENT AND RAISE pH LEVEL TO 6.5 AND WORK INTO SUBSOIL TO A DEPTH OF 4 (FOUR) INCHES.

4. INSTALL REQUIRED EROSION CONTROL PRACTICES AND FACILITIES.

5. SCARIFY SURFACE OF SOIL PRIOR TO APPLYING TOPSOIL. HANDLE TOPSOIL ONLY WHEN IT IS DRY ENOUGH TO PREVENT DAMAGING THE SOIL STRUCTURE.

6. INSTALL AT A DEPTH OF 5 (FIVE) INCHES (UNSETTLED).

7. ALTERNATE: INSTALL AT A DEPTH OF 12 (TWELVE) INCHES TO COVER SOILS HAVING A pH OF 4.0 OR LESS (OR CONTAINING IRON SULFIDE).

STANDARD FOR TEMPORARY VEGETATIVE COVER FOR SOIL STABILIZATION

1. Site Preparation

A. Grade as needed and feasible to permit the use of conventional equipment for seedbed preparation, seeding, mulch application, and mulch anchoring. All grading should be done in accordance with Standards for Land Grading, pg. 19-1 of standards for S.E.S.C. in N.J.

Install needed erosion control practices or facilities such as diversions, grade stabilization structures, channel stabilization measures, sediment basins, and waterways. See Standards 11 through 42.

Immediately prior to seeding, the surface should be scarified 5" to 12" where there has been soil compaction. This practice is permissible only where there is no danger to underground utilities (cables, irrigation systems, etc.).

2. Seedbed Preparation

A. Apply ground limestone and fertilizer according to soil test recommendations such as offered by Rutgers Co-operative Extension. Soil sample mailers are available from the local Rutgers Cooperative Extension offices. Fertilizer shall be applied at the rate of 500 pounds per acre or 11 pounds per 1,000 square feet of 10-20-10 or equivalent with 50% water insoluble nitrogen unless a soil test indicates otherwise. Apply limestone at the rate of 2 tons/acre unless soil testing indicates otherwise. Calcium carbonate is the equivalent and standard for measuring the ability of liming materials to neutralize soil acidity and supply calcium and magnesium to grasses and legumes. Table 7-1 is a general guideline for limestone application.

TABLE 7-1

Limestone I Application Rate by Soil Texture

SOIL TEXTURE	TONS/ACRE	LBS/1000 S.F.
Clay, clay loam, and high organic soil	3	135
Sandy loam, loam, silt loam	2	90
Loamy sand,sand	1	45

1. Pulverized dolomitic limestone is preferred for most soils south of the New Brunswick-Trenton line.

B. Work lime and fertilizer into the soil as nearly as practical to a depth of 4 inches with a disc, springtooth harrow, or other suitable equipment. The final harrowing or discing operation should be on the general contour. Continue tillage until a reasonable uniform seedbed is prepared.

C. Inspect seedbed just before seeding. If traffic has left the soil compacted, the area must be restilled in accordance with the above.

D. Soils high in sulfides or having a pH of 4 or less refer to Standard for Management of High Acid Producing Soils, pg. 1-1of Standards for S.E.S.C. in N.J.

3. Seeding

A. SEED SELECTIONS

	LB/AC	RATE (1) LB/1000 S.F.	ZONE 5a, 6a	DATE (2)(3) ZONE 6b	ZONE 7a, b	DEPTH (4) INCHES
COOL SEASON GRASSES						
PERENNAL RYEGRASS	100	1.0	3/15-5/31	3/1-5/15	2/15-5/1	0.5
			8/1-9/15	8/15-10/1	8/15-10/15	
SPRING OATS	86	2.0	3/15-5/31	3/1-5/15	2/15-5/1	1.0
			8/1-9/15	8/15-10/1	8/15-10/15	
WINTER BARLEY	96	2.2	8/1-9/15	8/15-10/1	8/15-10/15	1.0
WINTER CEREAL RYE	112	2.8	8/1-11/1	8/15-11/15	8/1-12/15	1.0
WARM SEASON GRASSES						
PEARL MILLET	20	0.5	6/1-8/1	5/15-8/15	5/1-9/1	1.0
MILLET (GERMAN OR HUNGARIAN)	30	0.7	6/1-8/1	5/15-8/15	5/1-9/1	1.0
WEEPING LOVEGRASS	5	0.2	6/1-8/1	5/15-8/15	5/1-9/1	0.25

1 Seeding rate for warm season grass, selections 5 - 7 shall be adjusted to reflect the amount of Pure Live Seed (PLS) as determined by a germination test result. No adjustment is required for cool season grasses. 2 May be planted throughout summer if soil moisture is adequate or seeded area can be irrigated. 3 Plant Hardiness Zone (see figure 7-1, pg. 7-4) 4 Twice the depth for sandy soils

B. Conventional Seeding. Apply seed uniformly by hand, cyclone (centrifuge) seeder, drop seeder, drill or cultipacker seeder. Except for drilled, hydroseeded or cultipacked seedings, seed shall be incorporated into the soil, to a depth of 1/4 to 112 inch, by raking or dragging. Depth of seed placement may be 1/4 inch deeper on coarse textured soil.

C. Hydroseeding is a broadcast seeding method usually involving a truck or trailer mounted tank, with an agitation system and hydraulic pump for mixing seed, water and fertilizer and spraying the mix onto the prepared seedbed. Mulch shall not be included in the tank with seed. Short fibered mulch may be applied with a hydroseeder following seeding. (also see section IV Mulching) Hydroseeding is not a preferred seeding method because seed and fertilizer are applied to the surface and not incorporated into the soil. Poor seed to soil contact occurs reducing seed germination and growth. Hydroseeding may be used for areas too steep for conventional equipment to traverse or too obstructed with rocks, stumps, etc.

D. After seeding, firming the soil with a corrugated roller will ensure good seed-to-soil contact, restore capillarity, and improve seeding emergence. This is the preferred method. When performed on the contour, sheet erosion will be minimized and water conservation on site will be maximized.

4. Mulching

Mulching is required on all seeding. Mulch will insure against erosion before grass is established and will promote faster and earlier establishment. The existence of vegetation sufficient to control soil erosion shall be deemed compliance with this mulching requirement.

A. Straw or Hay Unrotted small grain straw, hay free of seeds, or salt hay to be applied at the rate of 1-1/2 to 2 tons per acre (70 to 90 pounds per 1,000 square feet), except that where a crimper is used instead of a liquid mulch-binder (tackifier or adhesive agent), the rate of application is 3 tons per acre. Mulch chopper-blowers must not grind the mulch. Hay mulch is not recommended for establishing fine turf on lawns due to the chaff of weed seeds.

Application Spread mulch uniformly by hand or mechanically so that approximately 85% of the soil surface will be covered. For uniform distribution of hand-spread mulch, divide area into approximately 1,000 square feet sections and distribute 70 to 90 pounds within each section.

Anchoring shall be accomplished immediately after placement to minimize loss by wind or water. This may be done by one of the following methods, depending upon the size of the area, steepness of slopes, and costs.

1. Peg and Twine. Drive 8 to 10 inch wooden pegs to within 2 to 3 inches of the soil surface every 4 feet in all directions. Stakes may be driven before or after applying mulch. Secure mulch to soil surface by stretching twine between pegs in a cris-cross and a square pattern. Secure twine around each peg with two or more round turns.

2. Mulch Netings. Staple paper, jute, cotton, or plastic nettings to the soil surface. Use a degradable netting in areas to be mowed.

3. Crimper (mulch anchoring cutter tool). A tractor-drawn implement, somewhat like a disc harrow, especially designed to push or cut some of the broadcast long fiber mulch 3 to 4 inches into the soil so as to anchor it and leave part standing upright. This technique is limited to areas traversable by a tractor, which must operate on the contour of slopes. Straw mulch rate must be 3 tons per acre. No tackifying or adhesive agent is required.

4. Liquid Mulch-Binders - May be used to anchor salt hay, hay or straw mulch.

a. Applications should be heavier at edges where wind may catch the mulch, in valleys, and at crests of banks. The remainder of the area should be uniform in appearance.

b. Use one of the following:

(1) Emulsified asphalt -(SS-1, CSS-1, CMS-2, MS-2, RS-1, RS-2, CRS-1, and CRS2). Apply 0.04 gal /ss /yd, or 194 gal /acre on flat areas and on slopes less than 8 feet or more high, use 0.075 gal /ss /yd, or 363 gal /acre. These materials may be difficult to apply uniformly and will discolor surfaces.

(2) Organic and Vegetable Based Binders - Naturally occurring, powder based, hydrophilic materials mixed with water formulates a gel and when applied to mulch under satisfactory curing conditions will form membranes networks of insoluble polymers. The vegetable gel shall be phytologically harmless and not result in a phytotoxic effect or impede growth of turfgrass. Use at rates and weather conditions as recommended by the manufacturer to anchor mulch materials. Many new products are available, some of which may need further evaluation for use in this state.

(3) Synthetic Binders - High polymer synthetic emulsion, miscible with water when diluted and following application to mulch, drying and curing shall no longer be soluble or dispersible in water. It shall be applied at rates recommended by the manufacturer and remain tacky until germination of grass.

Note: All names given above are registered trade names. This does not constitute a recommendation of these products to the exclusion of other products.

B. Wood-fiber or paper-fiber mulch - shall be made from wood, plant fibers or paper containing no growth or germination inhibiting materials, used at the rate of 1,500 pounds per acre (or as recommended by the product manufacturer) and may be applied by a hydroseeder. This mulch shall not be mixed in the tank with seed. Short fibered mulch may be applied with a hydroseeder following seeding. (also see section IV Mulching seeding) Hydroseeding is not a preferred seeding method because seed and fertilizer are applied to the surface and not incorporated into the soil. Poor seed to soil contact occurs reducing seed germination and growth. Hydroseeding may be used for areas too steep for conventional equipment to traverse or too obstructed with rocks, stumps, etc.

C. Fibrated mulch - compressed and extruded paper and/or wood fiber product, which may contain co-polymers, tackifiers, fertilizers and coloring agents. The dry product when applied to a seeded area and watered forms mulch mat. Fibrated mulch shall be applied in accordance with the manufacturers recommendations. Mulch may be applied by hand or mechanical sprecder at the rate of 60-75 lbs/1,000 square feet and activated with 0.2 to 0.4 inches of water. This material has been found to be beneficial for use on small lawn or renovation areas, seeded areas where weed-seed free mulch is desired or on sites where straw mulch and tackifier agent are not practical or desirable.

Applying the full 0.2 to 0.4 inches of water after spreading fibrated mulch on the seed bed is extremely important for sufficient activation and expansion of the mulch to provide soil coverage.

5. Inoculation (where feasible)

If soil moisture is deficient, and mulch is not used, supply new seedings with adequate water (a minimum of 1/4 inch twice a day until vegetation is established). This is especially true when seedings are made in abnormally dry or hot weather or on droughty sites.

6. Topdressing

Since slow release nitrogen fertilizer (water insoluble) is prescribed in Section B, A. Seedbed Preparation in this Standard, no follow-up topdressing is mandatory. An exception may be made where gross nitrogen deficiency exists to the extent that turf failure may develop. In that instance, topdress with 10-10-10 or equivalent at 400 pounds per acre or 10 pounds per 1,000 square feet.

7. Establishing Permanent Vegetative Stabilization

The quality of permanent vegetation rests with the contractor. The timing of seeding, preparing the seedbed, applying nutrients, mulch and other management are essential. The seed mixtures in Table 4-3 (pg. 4-7) are required when a Report of Compliance is requested prior to actual establishment of permanent vegetation. Up to 50% reduction in application rates may be used when a Report of Compliance is not requested prior to actual establishment of permanent vegetation. Contact your district. These rates apply to all methods of seeding. Establishing permanent vegetation means 80% vegetative cover (ofthe seeded species) and mowed once.

8. Permanent Seeding

GENERAL LAWN AREA

Seed is to be uniformly applied to the normal depth of 1/4" to 1/2" (except hydro seeding). Type 15 seed will be used at the following rates for the mixture:

a. Hard Fescue @ 200 lbs /acre of 2.7 lbs /1,000 sq. ft.
b. Perennial Ryegrass @ 200 lbs /acre or 0.7 lbs /1,000 sq. ft.
c. Kentucky Bluegrass (Blend) @ 200 lbs /acre of 0.9 lbs /1,000 sq. ft.

Seeding Dates
Seeding Dates 2/1 to 4/30 and 8/15 to 11/30.

DETENTION BASIN

No seeding required - sand bottom proposed with retaining walls.

STABILIZATION WITH MULCH STANDARD

1. EXPOSED SOILS NOT SUBJECT TO CONSTRUCTION AND BEYOND RECOMMENDED SEEDING DATES OR VEGETATION COVER REQUIRING MULCH COVER FOR DROUGHTY SITES SHALL BE MULCHED (INCLUDING AS A TEMPORARY MEASURE UNTIL A MORE SUITABLE PROTECTION IS DEVELOPED).

2. GRADE AS REQUIRED TO PERMIT USE OF CONVENTIONAL EQUIPMENT FOR APPLYING AND ANCHORING MULCH. IF REQUIRED AS A COVER FOR PERMANENT VEGETATION PREPARATION SHALL CONFORM TO PERMANENT VEGETATIVE STANDARDS.

3. INSTALL REQUIRED EROSION CONTROL PRACTICES AND FACILITIES PRIOR TO MULCH APPLICATION.

4. SITE REQUIRING TEMPORARY COVER OR UNTIL A MORE SUITABLE PROTECTION IS DEVELOPED, MULCH WITH UNROTTED SMALL GRAIN STRAW, HAY OR SALT HAY AT A RATE OF 1 1/2 TO 2 TONS/AC (70 TO 90 LBS/1000SF). SPREAD UNIFORMLY TO ACHIEVE 75% TO 90% SOIL COVERAGE. SITES REQUIRING OUT OF SEASON STABILIZATION MULCH AS ABOVE AT A RATE OF 2 TO 2 1/2 TONS/AC (90-115 LBS/1000 FS) AND ANCHOR MULCH WITH MULCH ANCHORING TOOL, LIQUID BINDERS OR NETTING TEDDWMS.

5. MULCH ANCHORING METHODS TO BE EMPLOYED IMMEDIATELY AFTER PLACEMENT OF MULCH STRAW OR HAY. IT MAY CONSIST OF THE FOLLOWING:

A. PEG AND TWINE - DRIVE 8 TO 10 WOODEN PEGS TO WITHIN 2 TO 3 INCHES OF THE SOIL SURFACE EVERY 4 (FOUR) FEET IN ALL DIRECTIONS. STAKES MAY BE DRIVEN BEFORE OR AFTER MULCHING. STRETCH TWINE BETWEEN PEGS IN A CRISS-CROSS AND SQUARE PATTERNS. SECURE TWINE AROUND EACH PEG WITH TWO OR MORE ROUND TURNS.

B. MULCH NETTINGS - STAPLE PAPER, JUTE, COTTON OR PLASTIC NETTINGS OVER HAY OR STRAW MULCH NETTING TO BE JUTE MESH OR APPROVED EQUAL.

C. MULCH ANCHORING TOOL - SPECIALLY EQUIPPED TRACTOR TO PUNCH AND ANCHOR MULCH INTO SOIL 3 TO 4 INCHES TO BE APPROVED BY SITE ENGINEERS.

D. LIQUID MULCH-BINDERS - APPLY HEAVIER AT EDGES OF MULCHED AREA IN VALLEYS AND CREST OF BANKS. REMAINDER TO BE UNIFORMLY SPREAD. FOLLOWING MAY BE USED:

1. EMULSIFIED ASPHALT - (SS-1, CSS-1, CMS-2, MS-2, RS-1, RS-2, CRS-1 AND CRS-2). APPLY 0.04 GAL/SY OR 194 GAL/AC ON FLAT SLOPES AND SLOPES LESS THAN 8 (EIGHT) FEET HIGH. ON SLOPES 8 (EIGHT) FEET OR GREATER APPLY AT 0.075 GAL/SY (363 GAL/AC).

2. OUTBACK ASPHALT - RAPID CURING (RC-70, RC-250, AND RC-800) OR MEDIUM CURING (MC-250 OR MC-800). APPLY 0.04 GAL/SY (194 GAL/AC) ON FLAT AREAS OR SLOPES LESS THAN 8 (EIGHT) FEET HIGH. ON SLOPES 8 (EIGHT) FEET OR GREATER APPLY AT 0.075 GAL/SY (363 GAL/AC).

3. SYNTHETIC OR ORGANIC BINDERS - TO BE APPLIED PER MANUFACTURERS RECOMENDATION.

C. Hydroseeding is a broadcast seeding method usually involving a truck or trailer mounted tank, with an agitation system and hydraulic pump for mixing seed, water and fertilizer and spraying the mix onto the prepared seedbed. Mulch shall not be included in the tank with seed. Short fibered mulch may be applied with a hydroseeder following seeding. (also see section IV Mulching seeding) Hydroseeding is not a preferred seeding method because seed and fertilizer are applied to the surface and not incorporated into the soil. Poor seed to soil contact occurs reducing seed germination and growth. Hydroseeding may be used for areas too steep for conventional equipment to traverse or too obstructed with rocks, stumps, etc.

D. After seeding, firming the soil with a corrugated roller will ensure good seed-to-soil contact, restore capillarity, and improve seeding emergence. This is the preferred method. When performed on the contour, sheet erosion will be minimized and water conservation on site will be maximized.

	BEGIN DATE	END DATE
OPERATION		
1. INSTALL STABILIZED CONSTRUCTION ENTRANCES AS SHOWN.		2 DAYS
2. INSTALL STAKED STRAW BALES OR SEDIMENT BARRIER AND TREE PROTECTION SNOW FENCE AS SHOWN.		1 DAY
3. DETERMINE TEMPORARY STOCKPILE LOCATION		2 WEEKS
4. CONSTRUCT BASIN INCLUDE PERMANENT STABILIZATION, CONSTRUCT UNDERGROUND DETENTION SYSTEM.		N/A
5. ROUGH GRADE SITE, INSTALL INTERMEDIATE GRAVEL PADS, AS SHOWN.		3 WEEKS
6. INSTALL UTILITIES INCLUDING & PAVEMENT. PROTECT INLETS AS SHOWN. PERFORM INITIAL LOT GRADING AND TEMPORARY STABILIZATION OF STOCKPILES.		N/A
7. CONSTRUCT BUILDING IN ACCORDANCE WITH TYPICAL EROSION CONTROL.		1 WEEK

NOTES: 1. THE CONTRACTOR SHALL BE RESPONSIBLE FOR MAINTENANCE OF EROSION CONTROL MEASURES DURING CONSTRUCTION.

2. THE TOWNSHIP SHALL HAVE RESPONSIBILITY FOR MAINTENANCE OF PERMANENT EROSION CONTROL MEASURES RELATED TO DRAINAGE FACILITIES UNDER ITS CONTROL.

3. ROADSIDE EMBANKMENTS ARE TO BE MAINTAINED IN A ROUGH GRADE AND TEMPORARILY STABILIZED UNTIL SUCH TIME AS PERMANENT VEGETATIVE COVER CAN BE ESTABLISHED.

Management of High Acid Producing Soils

High acid producing soils may be present in undisturbed soils at varying depths including near the soil surface to excavations or deep disturbances. Its presence on a site may be significant or limited in its extent. High acid producing soils are commonly black, dark brown, gray or greenish with silvery specks or marcasite nuggets or flecks. Alternatively, sandy soils of reddish, yellowish or light to medium brown soil materials are usually free of high acid producing deposits.

Methods and Materials

1. Limit the excavation area and exposure time when high acid producing soils are encountered.

2. Topsoil stripped from the site shall be stored separately from temporarily stockpiled high acid producing soils.

3. Stockpiles of high acid producing soil should be located on level land to minimize its movement, especially when this material has a high clay content.

4. Temporarily stockpiled high acid producing soil material to be exposed more than 30 days should be covered with properly anchored, heavy grade sheets of polyethylene where possible. If not possible, stockpiles shall be covered with a minimum of 3 to 6 inches of wood chips to minimize erosion of the stockpiled material. Place silt fence at the toe of slope to contain movement of the stockpiled material. Topsoil shall not be applied to the stockpiles to prevent topsoil contamination with high acid producing soil.

5. High acid producing soils with a pH of6 or less, or containing iron sulfide, (including borrow from outside) shall be immediately placed or buried with inert material at the rate of 6 tons per acre (or 275 pounds per 1,000 square feet of surface area) and covered with a minimum of 12 inches of settled soil with a pH of 5 or more except as follows:

a. Areas where trees or shrubs are to be planted shall be covered with a minimum of 24 inches of soil with a pH of 5 or more.
b. Disposal areas shall not be located within 24 inches of any surface or a slope or bank, such as berms, stream banks, ditches and others to prevent potential lateral leaching damages.

6. Equipment used for movement of high acid producing soils should be cleaned at the end of each day to prevent spreading of high acid soil materials to other parts of the site, into streams or stormwater conveyances and to protect machinery from accelerated rusting.

7. Non vegetative erosion control practices (stone tracking pads, strategically placed limestone check dams, silt fence, wood chips) should be installed to limit the movement of high acid producing soils from, around or off the site.

8. Following burial or removal of high acid producing soil, topsoiling and seeding of the site, (see Temporary Vegetative Cover for Soil Stabilization, pg. 7-1, Permanent Vegetative Cover for Soil Stabilization , pg. 4-1 and Topsoiling, pg. 8-1) monitoring should continue for approximately 6 to 12 months to assure there is adequate stabilization and that no high acid soil problems emerge. If problems still exist the affected area must be treated as indicated above to correct the problem.

9. Monitoring of areas where high acid producing soil has been placed or buried should be performed for at least 2 years or longer if problems occur, to assure there is no migration of potential acid leachate.

STANDARD FOR PERMANENT VEGETATIVE COVER FOR SOIL STABILIZATION

1. Site Preparation

A. Grade as needed and feasible to permit the use of conventional equipment for seedbed preparation, seeding, mulch application, and mulch anchoring. All grading should be done in accordance with Standards for Land Grading, p. 19-1 of standards for S.E.S.C. in N.J.

B. Immediately prior to seeding and topsoil application, the surface should be scarified 5" to 12" where there has been soil compaction. This practice is permissible only where there is no danger to underground utilities (cables, irrigation systems, etc.)

C. Install needed erosion control practices or facilities such as diversions, grade stabilization structures, channel stabilization measures, sediment basins, and waterways. See Standards II through 42.

2. Seedbed Preparation

A. Apply ground limestone and fertilizer according to soil test recommendations such as offered by Rutgers Co-operative Extension. Soil sample mailers are available from the local Rutgers Cooperative Extension offices. Fertilizer shall be applied at the rate of 500 pounds per acre or 11 pounds per 1,000 square feet of 10-20-10 or equivalent with 50% water insoluble nitrogen unless a soil test indicates otherwise. Apply limestone at the rate of 2 tons/acre unless soil testing indicates otherwise. Calcium carbonate is the equivalent and standard for measuring the ability of liming materials to neutralize soil acidity and supply calcium and magnesium to grasses and legumes. Table 7-1 is a general guideline for limestone application.

B. Work lime and fertilizer into the soil as nearly as practical to a depth of 4 inches with a disc, springtooth harrow, or other suitable equipment. The final harrowing or discing operation should be on the general contour. Continue tillage until a reasonable uniform seedbed is prepared.

C. Immediately prior to seeding, the surface should be scarified 5" to 12" where there has been soil compaction. This practice is permissible only where there is no danger to underground utilities (cables, irrigation systems, etc.).

D. High acid producing soil.

Soils having pH of4 or less or containing iron sulfide shall be covered with aminimum of 12 inches of soil having a pH of 5 or more before initiating seedbed preparation. See Standard for Management of High Acid Producing Soils, pg. 1-1.

3. Seeding

A. Select a mixture from Table 4-3 (pg. 4-7) or use a mixture recommended by Rutgers Cooperative Extension or Natural Resources Conservation Service which is approved by the Soil Conservation District. Seed germination shall have been tested within 12 months of the planting date. No seed shall be accepted with a germination test date more than 12 months old unless retested.

1. Seeding rates specified are required when a report of compliance is requested prior to actual establishment of permanent vegetation. Up to 50% reduction in rates may be used when permanent vegetation is established prior to a report of compliance inspection. These rates apply to all methods of seeding. Establishing permanent vegetation means 80% vegetative coverage with the specified seed mixture for the seeded area and mowed once.

2. Warm season mixtures are grasses and legumes which maximize growth at high temperatures, generally 85° F and above. See Table 4-3 (pg.4-7), mixtures 1 to 7. Planting rates for warm season grasses shall be the amount of Pure Live Seed (PLS) as determined by germination testing results.

3. Cool Season Mixtures are grasses and legumes which maximize growth at temperatures below 85OF. Many grasses become active at 85OF. See Table 3, mixtures 8-20. Adjustment of planting rates to compensate for the amount of Pure Live Seed is not required for cool season grasses.

B. Conventional Seeding is performed by applying seed uniformly by hand, cyclone (centrifuge) seeder, drop seeder, drill or cultipacker seeder. Except for drilled, hydroseeded or cultipacked seedings, seed shall be incorporated into the soil within 24 hours of seedbed preparation to a depth of 1/4 to 1/2 inch, by raking or dragging. Depth of seed placement may be 1/4 inch deeper on coarse textured soil.

C. Hydroseeding is a broadcast seeding method usually involving a truck or trailer mounted tank, with an agitation system and hydraulic pump for mixing seed, water and fertilizer and spraying the mix onto the prepared seedbed. Mulch shall not be included in the tank with seed. Short fibered mulch may be applied with a hydroseeder following seeding. (also see section IV Mulching seeding) Hydroseeding is not a preferred seeding method because seed and fertilizer are applied to the surface and not incorporated into the soil. Poor seed to soil contact occurs reducing seed germination and growth. Hydroseeding may be used for areas too steep for conventional equipment to traverse or too obstructed with rocks, stumps, etc.

D. After seeding, firming the soil with a corrugated roller will ensure good seed-to-soil contact, restore capillarity, and improve seeding emergence. This is the preferred method. When performed on the contour, sheet erosion will be minimized and water conservation on site will be maximized.

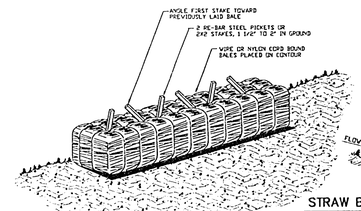

STRAW BALE DETAIL
N.T.S.

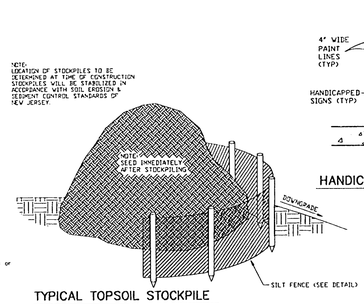

NOTE:
LOCATION OF STOCKPILES TO BE DETERMINED AT TIME OF CONSTRUCTION STOCKPILES WILL BE STABILIZED IN ACCORDANCE WITH SOIL EROSION & SEDIMENT CONTROL STANDARDS OF NEW JERSEY.

HANDICAPPED PARKING SPACE DETAIL
NOT TO SCALE

THE FIRST RUNG SHALL BE 8' BELOW THE TOP OF THE COURSE THEN 16" OR AT THE BOTTOM OF THE BATTER BLOCK THEN STAGGERED EVERY 2ND COURSE AS SHOWN ON PLAN

ALUMINUM LADDER RUNG
N.T.S.

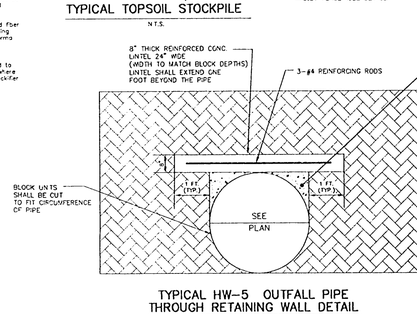

TYPICAL TOPSOIL STOCKPILE
N.T.S.

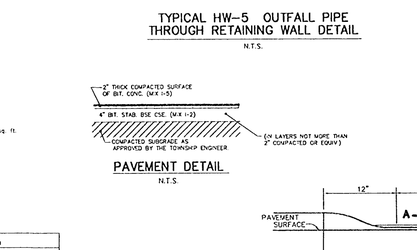

TYPICAL HW-5 OUTFALL PIPE THROUGH RETAINING WALL DETAIL
N.T.S.

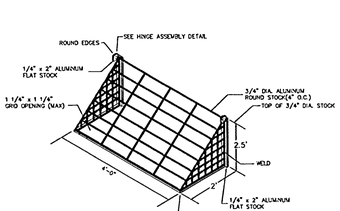

TRASH RACK FOR PRIMARY ORIFICES
(N.T.S.)

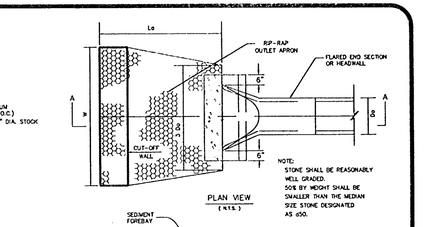

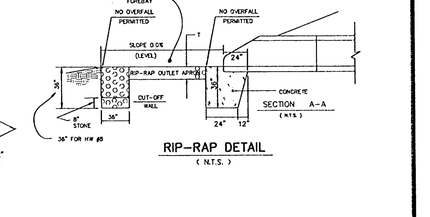

RIP-RAP DETAIL
(N.T.S.)

RIP RAP SCH'D #	STRUCTURE (Q) (CFS)	Do (FT.)	Wo (FT.)	q=Q/Wo CFS/FT	T=q*0.50= (FEET)	To>=0.50= (FEET)	La (FEET)	W (FEET)	D50 (FEET)	D50 (IN)	T** (IN)
$ A	HW #5	7.5	1.166	1.917	3.97		0.85	11	10	0.12	3.0	6.0
* B	HW #7	3.65	1.25	1.25	2.92	0.25	14	18	0.27	3.2	6.4

$ - 2 YR. TAILWATER ELEV. USED
* - Q_{100} FLOW USED

Do=MAX. INSIDE CULVERT HT. Wo = MAX. INSIDE CULVERT WIDTH q=Q/Wo
FOR TW IN BASIN 2 YR. ELEV. USED
La =(1.8q/Do^½)+(7Do) (if TW<Do) W =(3Wo+La)
Lo =(3q/Do^½) (if TW>Do) W =(3Wo+0.4La)
D50 =(0.015/TW)*(Q)^½ (if TW cannot be computed use Tw=0.2Do)
**T = 3(d50) or 2(d50) w/Filter Fabric, use fields unless otherwise specified.

CONDUIT OUTLET PROTECTION

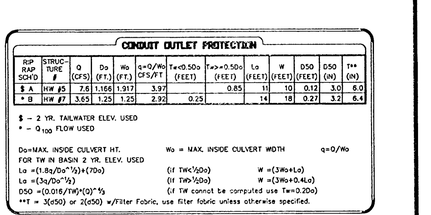
Bufftech
CERTAINTEED - OUTDOOR PRODUCTS DIVISION
1 PRESTIGE PARK
BUFFALO, NEW YORK 14218
TOLL FREE: 1-800-233-8990
PHONE: (716) 823-2023
FAX: (716) 823-2843
www.bufftech.com
POST CENTERS 3.5'X 3.5'X 1/8"
d CHESTERFIELD 6' HIGH 1/8" W.O.E
CHESTERFIELD VINYL FENCING
SEE ACCEPTANCE STATEMENT. CHESTERFIELD FENCE INSTALLATION I

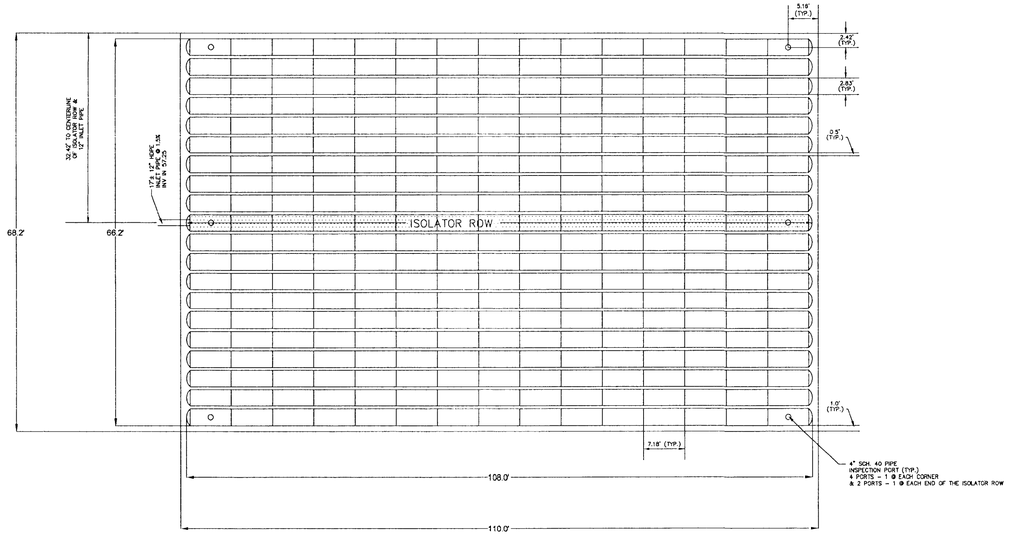

SC-310 STORMTECH CHAMBERS LAYOUT

N.T.S.

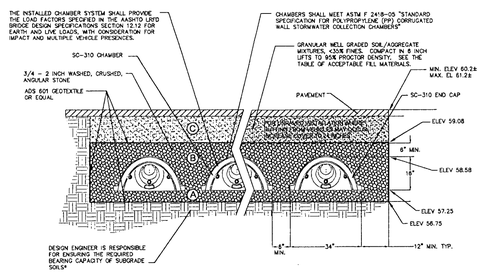

THIS CROSS SECTION DETAILS THE REQUIREMENTS NECESSARY TO SATISFY THE LOAD FACTORS SPECIFIED IN THE AASHTO LRFD BRIDGE DESIGN SPECIFICATIONS SECTION 12.12 FOR EARTH AND LIVE LOADS USING STORMTECH CHAMBERS

TYPICAL CROSS SECTION – STORMTECH CHAMBERS

N.T.S.

ACCEPTABLE FILL MATERIALS
STORMTECH SC-310 AND SC-740 CHAMBER SYSTEMS

MATERIAL LOCATION	DESCRIPTION	AASHTO M43 DESIGNATION	AASHTO M145 DESIGNATION	COMPACTION/DENSITY REQUIREMENT
① FILL MATERIAL FROM 18" TO GRADE ABOVE CHAMBERS	ANY SOIL/ROCK MATERIALS, NATIVE SOILS OR PER ENGINEER'S PLANS. CHECK PLANS FOR PAVEMENT SUBGRADE REQUIREMENTS.	N/A	N/A	PREPARE PER ENGINEER'S PLANS. PAVED INSTALLATIONS MAY HAVE STRINGENT MATERIAL AND PREPARATION REQUIREMENTS.
② FILL MATERIAL FOR 9" TO 18" ELEVATION ABOVE CHAMBERS (24" FOR UNPAVED INSTALLATIONS)	GRANULAR WELL-GRADED SOIL/AGGREGATE MIXTURES, <35% FINES.	3, 357, 4, 467, 5, 56, 57, 6, 67, 68, 7, 78, 8, 89, 9, 10, 11, 12, 2, 21, 22, 3, 23, 24, 4, 25, 26, 5, 6, 7, 8