Block:	93	Land Desc:	3.03 AC	Owners Name:	LAY ANDREA			Land:	195,500	Exemption	Net Taxable Value
Lot:	18.10	Bldg Desc:	2SF/3AG	Street Address:	18 TODD RIDGE RD	Bank:	00000	Impr:	687,600	Code:	
Qual:		Addl Lots:		City & State:	TITUSVILLE NJ	Zip:	08560	Total:	883,100	Value: 0	883,100
Card:	M (#1 of 1)	Acreage:	3.030 Class: 2	Property Loc:	18 TODD RIDGE RD	Zone:	VRC			Map: 22	HOPEWELL

SALES HISTORY

Grantor	Date	Book/Page	Price	Nu#
	12/23/04	5042 /00020	1100000	
	06/19/00	03869/00210	881225	

ASSESSMENT HISTORY

Year	Land	Impr	Total
2005	195500	687600	883100
2006	296500	976700	1273200

BUILDING PERMITS/REMARKS

Date	Work Description	Amount	Compl.
	32,060		
	27		
	23,159		
	Mowell	9-21	06

LAND CALCULATIONS

Frt	Rr	SB	T	FF	Avgd	Tabl	EqF	Rate	Site	Cond			Value

		Units	Rate	Site	Cond			Value
WET	80							
ECONOMIC		2.000 AC	50000	250000	100	100	100	350000
		1.030 AC	20000		100	100	100	20600

Net Adj: 80.00 SF: 131,986 Auto: Y Land Value: 296,480

SITE INFORMATION

Info By:	OWNER	Utilities:	
Road:	PAVED		ELECTRIC
Curbs:	CURBS		GAS
Sidewalk:	NONE		WATER
Measured:	AD 8/15/05	Neigh Type/View:	TYPICAL /TYPICAL
Listed:	AD 8/16/05	Neigh:	163
		VCS:	A163

BUILDING INFORMATION

Type and Use: ONE FAMILY	Class/Quality: 20
Story Height: TWO STORY	Livable Area: 5734 SF
Style: COLONIAL	Year Built/Eff Yr: 2000 / 2002 Y
Exterior Finish: WOOD SIDING	Interior Finish: DRYWALL
Roof Type: HIP	Layout:
Roof Material: ASPHALT	Int/Ext Cond: AVG. /AVG.
Foundation: BLOCK/CONCRETE	Electric: ADEQUATE
Att Gar: 3 CAR ATT GAR	Misc:
Heat Source: GAS	
Floor Finish MIXED	

BUILDING SKETCH

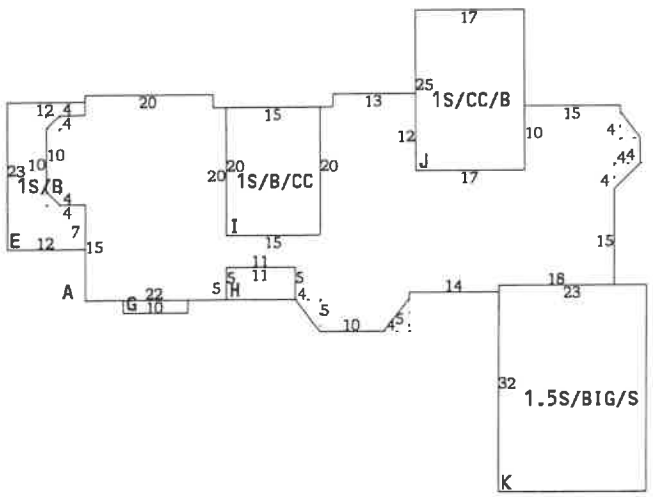

A:2S/B	u32 r12;u15 l4 n2 w2 u10 n2 e2 r4 u3 r20 d2	2166
B:	r15 u20 r2 u2 r13 d12 r17 u10 r15 d1 s4	0
C:	e3 d4 w4 s4 d15 l18 d1 l14 d1 s5 w4 l10	0
D:	n5 w4 u5 l11 d5 l22	0
E:1S/B	u40 r0;u23 r12 d2 l4 s2 w2 d10 s2 e2 r4	196
F:	d7 l12	0
G:2S/B	u30 r18;u2 r10	20
H:OP/OP	u32 r34;u5 r11	55
I:1S/B/CC	u42 r34;u20 r15 M:	
J:1S/CC/B	u52 r64;u25 r17 N:	
K:1.5S/BIG/S	u2 r77;u32 r23 O:	
L:	P:	

Copyright (c) 1999 MicroSystems-NJ.Com, L.L.C.

ROOM COUNT

	B	1	2	3/A	Tot
Living Rm	0	1	0	0	1
Dining Rm	0	1	0	0	1
Kitchen	0	1	0	0	1
Bathroom	0	2	3	0	5
Bed Room	0	0	5	0	5
Rec Room	0	1	0	0	1
Den/Off	0	1	0	0	1

Old B:
Old L: 03/24/06

RESIDENTIAL COST APPROACH

Basement							
BASEMENT	3107	x 10.400	+ 0	x1.54	x1.00=	49762	
Main Bldg							
FIRST STORY	3843	x 113.040	+51520	x1.00	x1.00=	485933	
UPPER STORY	2186	x 84.150	+16500	x1.00	x1.00=	200452	
HALF STORY	736	x 48.740	+ 8295	x1.00	x1.00=	44168	
CATHEDRAL CEILING	725	x 9.450	+ 831	x1.00	x1.00=	7682	
STONE SF	640	x 24.840	+ 168	x1.30	x1.00=	20885	
SLAB	736	x -1.230	+-1008	x1.95	x1.00=	-3731	
ATTACH GARAGE	736	x -9.300	+-2160	x1.58	x1.00=	-14228	
FORCED HOT AIR	5734	x 2.820	+ 0	x1.15	x1.00=	18595	
AC ADDED TO HOT	5734	x 1.790	+ 0	x1.49	x1.00=	15293	
Plumbing							
5 FIXTURE BATH	1	x4095.000	+ 0	x1.49	x1.00=	6102	
3 FIXTURE BATH	3- 2	x2595.000	+ 0	x1.49	x1.00=	3867	
2 FIXTURE BATH	1- 1	x1895.000	+ 0	x1.49	x1.00=	0	
Fireplace							
FIREPLACE 2STY	1	x4850.000	+ 0	x1.60	x1.00=	7760	
Attic							
DORMER	8	x 136.000	+ 0	x1.34	x1.00=	1458	
Deck/Patio/Garage/Misc							
OPEN PORCH	110	x 10.760	+ 456	x1.30	x1.00=	2131	

Base Cost:	846129	CCF: 119	CLA: 100	Cost New:	1006894
Phys Depr:	3.00(N)	Func Depr:		Net Depr:	97.00
Eco Depr:		Mkt+:	Mkt-:	Bldg Value:	976687

Detached Items/Notes:

Land: 296,500 Impr: 976,700 Total: 1,273,200