Township Archives
Township of Brick, NJ
401 Chambers Bridge Rd, Brick, NJ 08723

This File Contains Personal Identifiable Information of Private Citizen(s).

Certain information contained in this file is ***Exempt from Release*** under the Open Public Records Act (OPRA) (Public Law 2001, CHAPTER 404 (N.J.S.A. 47:1A-1 et seq.)) and Executive Orders issued by the Governor of New Jersey. The following information ***MUST*** be redacted prior to release:

- Social Security Numbers
- Drivers' License Numbers
- Unlisted Phone Numbers
- Credit Card Numbers
- Bank Account Numbers and Balances

For further information, consult with the Township Clerk, Township Archivist or Township Attorney prior to release.

Bryan J. Dickerson, CA, CMR
Township Archivist

Issued: 8 January 2020

BLOCK 1385.09 LOT 16 QUALIFICATION CODE _____ ADDRESS (SITE) 681 Rolling Hills Ct. PERMIT NO. 20-0890

CONSTRUCTION PERMIT APPLICATION

NEW JERSEY UNIFORM CONSTRUCTION CODE

Applicant Completes: Sections I, II, III (optional), IV, VI, and VII C-20-00 1064

I. IDENTIFICATION

1. Proposed Work Site at: 681 Rolling Hills Ct., Brick 08724
2. Name of Owner in Fee: David FINNERTY
   Tel. [redacted] e-mail _____
   Address 681 Rolling Hills Court, Brick 08724 (street, municipality, zip code)
3. Ownership in Fee: Public _____ Private _____
4. Principal Contractor: **Corbin Electrical Services, Inc.** Tel. (732) 536-0444
   Address **35 Vanderburg Road** e-mail bvorrius@corbinelectric.com
   Marlboro, NJ 07746
   License No. OR, if new home, Builder Reg. No. **6419** Exp. Date _____
   Home Improvement Contractor Registration No. or Exemption Reason (if applicable): _____
   Federal Emp. ID No. **22-3121404** FAX: (732) 536-8547
5. Architect or Engineer _____ Contact _____
   Address _____ e-mail _____
   Tel. (____) _____ FAX: (____) _____
6. Responsible Person in Charge once Work has Begun **Marc Sheiner**
   Tel. (732) 536-0444 FAX: (____) _____

V. FEE SUMMARY (for office use only)

		Update	Update
1. Building	$		
2. Electrical	245		
3. Plumbing			
4. Fire Protection			
5. ~~Elevator Devices~~ Mechanical	125		
6. Subtotal			
7. Less 20% for State Plan Review	$		
8. Subtotal	$		
9. State Permit Surcharge Fee	21		
10. Subtotal 2	$ 50		
11. Cert. of Occupancy			
12. Other			
13. TOTAL	$ 441		

VI. BUILDING/SITE CHARACTERISTICS (office use only)

1. Number of Stories _____
2. Height of Structure _____ ft.
3. Area — Largest Floor _____ sq. ft.
4. New Building Area _____ sq. ft.
5. Volume of New Structure _____ cu. ft.
6. Max. Live Load _____
7. Max. Occupancy Load _____
8. If Industrialized Building: State Approved ____ HUD ____
9. Total Land Area Disturbed _____ sq. ft.
10. Flood Hazard Zone _____
11. Base Flood Elevation _____ ft.
12. Wetlands yes ____ no ____

IIa. PROPOSED WORK

☐ Minor Work ☐ New Building ☐ Addition ☐ Demolition
☐ Repair Generator ☐ Alteration ☐ Renovation ☐ Reconstruction
☐ Asbestos Abat. -Subch. 8 ☐ Lead Hazard Abatement ☐ Radon Remediation ☐ Annual Permit

IIb. SUBCODES (Check all that apply)

FOR OFFICE USE ONLY (Optional)

	Est. Cost	Plans Rec'd by	Date Rec'd	Rejection Date	Approval Date	Re-viewer	Resubmission Dates Approval	Resubmission Dates Rejection	Re-viewer
☐ Building									
☒ Electrical					4-20-2020				
☒ Plumbing					4-23-20				
☐ Fire Protection									
☐ Elevator		Eng Exempt			4/16/2020				
TOTAL COST									

VII. DESCRIPTION OF BUILDING USE

A. RESIDENTIAL *(primary use)*
1. State Specific Use: _____
2. Use Group, Proposed: _____
3. Change in Use Group, Indicate Present:
4. No. of dwelling units: *Total Units* *Income-restricted*
   Gained, Sale ____ ____
   Gained, Rental ____ ____
   Lost, Sale ____ ____
   Lost, Rental ____ ____

B. NON-RESIDENTIAL *(primary use)*
1. State Specific Use: _____
2. Use Group, Proposed: _____
3. Change in Use Group, Indicate Present:

C. MIXED USE -List secondary use(s): _____

D. Construct. Classification: Present _____ Proposed _____

III. PLAN REVIEW (optional)

DO YOU WANT:
1. ☐ Partial Releases
2. ☐ Prototype Processing

IV. DOES OR WILL YOUR BUILDING CONTAIN ANY OF THE FOLLOWING?

1. ☐ Elevators/Escalators/Lifts/Dumbwaiters/Moving Walks
2. ☐ High Pressure Boilers
3. ☐ Pressure Vessels
4. ☐ Refrigeration Systems
5. ☐ Cross-Connections/Backflow Preventers
6. ☐ Hazardous Uses/Places of Assembly
7. ☐ Sprinklers/Standpipes
8. ☐ Smoke Control Systems in Open Wells
9. ☐ Underground Storage Tanks
10. ☐ Swimming Pools, Spas and Hot Tubs
11. ☐ LPGas Tanks
12. ☐ Fire Alarm

RECEIVED APR 03 2020

2

CERTIFICATION IN LIEU OF OATH

I. OWNER SECTION (to be completed if the applicant is the owner in fee)

I hereby certify that I am the owner in fee of the property listed on Page 1.

Mark the following applicable boxes:

A. ( ) I further certify that a new home (private residence) will be constructed on this property for my own use and occupancy. This dwelling is to be occupied by myself and is not to be used for any purpose other than single family residential use. I attest that all construction, plumbing, or electrical work will be done, in whole or in part, by me or by subcontractors under my supervision, in accordance with all applicable laws; and, I further acknowledge that said new home is not covered under the New Home Warranty and Builders Registration Act (N.J.S.A. 46:3B-1 et seq.) and that such fact shall be disclosed to any person purchasing this property within ten years of the date of issuance of a certificate of occupancy.

I UNDERSTAND THAT IN MARKING BOX A, I ACKNOWLEDGE THAT I AM ASSUMING RESPONSIBILITY FOR THE WORK DONE ON SAID PROPERTY, THE CONDITION OF THE PROPERTY PRIOR TO, DURING, AND AFTER ANY WORK PERFORMED, AND FOR THE PERFORMANCE OF THE SUBCONTRACTORS I HIRE, EMPLOY, OR OTHERWISE CONTRACT OR WITH WHOM I MAKE AGREEMENTS TO PERFORM WORK. I AM VOLUNTARILY AND KNOWINGLY ASSUMING THIS RESPONSIBILITY.

B. ( ) I further certify the following as required by the New Jersey Uniform Construction Code, N.J.A.C. 5:23-2.15(f)1.ix:

I personally prepared the plans submitted for: 1) the new home referred to in A.; or, 2) an addition, alteration, renovation, or repair to an existing single family residence owned and occupied by myself and located on the property listed on Page 1; or, 3) a new structure that will be physically separate from, but that will be deemed part of, an existing single family residence that is owned and occupied by myself and located on the property listed on Page 1.

C. ( ) I further certify that I will perform or supervise the following work:
C.1. ( ) Building C.2. ( ) Fire Protection

I further certify that I will perform the following work:
C.3. ( ) Electrical C.4. ( ) Plumbing

D. ( ) I agree to advise all contractors on this project that they are required to be registered with the New Jersey Division of Taxation and to comply with all New Jersey tax laws.

I further certify the following as required by the Uniform Construction Code, N.J.A.C. 5:23-2.15(a)5: All required State, county, and local prior approvals, including such certification as the construction official may require, have been given or will be given prior to pemit issuance.

I understand that if any of the above statements are willfully false, I am subject to punishment.

Signature_____ Date _____

II. AGENT SECTION (to be completed if the applicant is not the owner in fee)

I hereby certify the following as required by the Uniform Construction Code, N.J.A.C. 5:23-2.15(d): the proposed work is authorized by the owner in fee; and I have been authorized by the owner in fee to make this application as his agent.

I further certify the following as required by the Uniform Construction Code, N.J.A.C. 5:23-2.15(a)5: All required State, county, and local prior approvals, including such certification as the construction official may require, have been given or will be given prior to permit issuance.

I agree to advise all contractors on this project that they are required to be registered with the New Jersey Division of Taxation and to comply with all New Jersey tax laws.

I understand that if any of the above statements are willfully false, I am subject to punishment.

(**X**) Check if contractor.

Agent Name **Corbin Electrical Services, Inc.**

Address **35 Vanderburg Road**

Marlboro, NJ 07746

Telephone **(732) 536-0444**

Signature

III. ( ) LEAD HAZARD ABATEMENT: Include Homeowner or Building Owner Affidavit as per N.J.A.C. 5:23-2.15(b)4.

IV. ( ) HOME ELEVATION: Include Home Elevation Contractor Certification as per N.J.S.A. 52:27D-123.16.

Brick Township
401 Chambersbridge Rd
Brick, NJ 08723

Date Issued	9/29/2020
Control Number	C-20-001064
Permit Number	20-0890
Permit Issue Date	5/11/2020
Certificate Number	20-0890

Certificate

Construction Code Division

(Certificate of Approval)

Identification

Work Site Location: 681 ROLLING HILLS CT. Brick Township, NJ Block: 1385.09 Lot: 16 Qual:

Owner in Fee: FINNERTY, DAVID A & DEANNA

Owner Address: 681 ROLLING HILLS COURT BRICK NJ 08724

Telephone: [redacted]

Contractor CORBIN ELECTRICAL SERVICES INC

Address 35 Vanderburg Road Marlboro NJ 07746

Telephone: (732) 536-0444 Fax: (732) 536-8547 Federal Emp. Number: 22-3151404

License Number or Builders Registration Number:

Home Warranty Number: Type of Warranty Plan: ☐ State ☐ Private

Use Group: R-5 Construction Classification:

Maximum Live Load: 0 Maximum Occupancy Load: 0

Description of Work/Use: GENERATOR

Certificate Comments:

☐ **Certificate of Occupancy**
This serves notice that said building or structure has been constructed in accordance with the New Jersey Uniform Construction Code and is approved for occupancy.

☑ **Certificate of Approval**
This serves notice that the work completed has been constructed or installed in accordance with the New Jersey Uniform Construction Code and is approved. If the permit was issued for minor work, this certificate was based upon what was visible at the time of inspection.

☐ **Certificate of Continued Occupancy**
This serves notice that based on a general inspection of the visible parts of the building there are no imminent hazards and the building is approved for continued occupancy.

☐ **Temporary Certificate of Compliance**
The following conditions must be met no later than
or the owner will be subject to fine or order to vacate:
This certificate has an expiration date of:
Conditions to be met:

☐ **Certificate of Clearance - Lead Abatement 5:17**
This serves notice that based on written certification, lead abatement was performed as per NJAC5:17 to the following extent.

☐ Total removal of lead-based paint hazards in scope of work
☐ Partial or limited time period (years); see file

☐ **Certificate of Clearance - Asbestos Abatement**
This serves notice that based on written certification, asbestos abatement was performed to the following extent.

☐ Total removal of asbestos hazards in scope of work
☐ Partial or limited time period (years); see file

☐ **Certificate of Compliance**
This serves notice that said potentially hazardous equipment has been installed and/or maintained in accordance with the New Jersey Uniform Construction Code and is approved for use until

☐ **Temporary Certificate of Occupancy**
The following conditions must be met no later than:
or the owner will be subject to fine or order to vacate:
This certificate has an expiration date of:
Conditions to be met:

Construction Official

Date Printed: 9/29/2020

U.C.C. F260 (rev. 08/05)

Fee: $0.00
Check Number:
Collected By:

MECHANICAL INSPECTION
TECHNICAL SECTION

Date Received 5/11/20
Control #
Date Issued
Permit # 20-0340

IDENTIFICATION—APPLICANT: COMPLETE ALL APPLICABLE INFORMATION. WHEN CHANGING CONTRACTORS, NOTIFY THIS OFFICE. CALL UTILITY DIG NO: 1-800-272-1000.

Block 138509 Lot 16 Qualification Code

Work Site Location 681 Rolling Hills Court, Brick 08724

Owner in Fee: David FINNERTY

Tel. [redacted] e-mail

Address 681 Rolling Hills Ct, Brick 08724 (street / municipality / zip code)

Contractor: **Corbin Electrical Services, Inc.** Tel. **(732) 536-0444**

Address **35 Vanderburg Road** e-mail

Marlboro, NJ 07746

Contractor License No. **19HC00070800** Exp. Date

Home Improvement Contractor Registration No. or Exemption Reason

Federal Emp. ID No. **22-3121404** FAX: **(732) 536-8547**

B. MECHANICAL CHARACTERISTICS

Use Group Present: R-3-or R-5

Heating System work: [ ] New OR [ ] Modification to Existing OR [ ] Conversion OR [ ] Replacement

Type: [ ] Hydronic [ ] Hot Air

Fuel Type: [ ] Gas [ ] Oil [ ] Electric [ ] Solar [ ] Other

Estimated Cost of Mechanical Work $ 650

JOB SUMMARY (Office Use Only)

PLAN REVIEW
[ ] No Plans Required
[X] Mechanical Plans Approved
Date: 4-23-20 Approved by: WM
Joint Plan Review Required:
[ ] Bldg. [ ] Elec. [ ] Plumb. [ ] Fire.
[ ] Elev.
SUBCODE APPROVAL for PERMIT
Date: 4-24-20
Approved by:
SUBCODE APPPROVAL for CERTIFICATE
[X] CA [ ] CCO
Date: 6-19-20
Approved by:

INSPECTIONS Type:	Failure	Failure	Approval	Initial
Water Heater				
Appliance				
Chimney/Vent				
Piping			6-3-20	
Tank				
Cooling/AC				
Generator				
Fireplace				
Chimney Cert.				
Other				
Other				
Final			6-19-20	WM

C. CERTIFICATION IN LIEU OF OATH

I hereby certify that I am the (agent of) owner of record and am authorized to make this application.

Applicant sign/Contractor sign and seal here:

Print name here: **Adam Corbin**

[X] Licensed Contractor [ ] Exempt Applicant

D. TECHNICAL SITE DATA

DESCRIPTION OF WORK

install gas pipe between meter + generator

NO.	FIXTURE/EQUIPMENT	FEE (Office Use Only)
	Water Heater	$
	Fuel Oil Piping Connections	
1	Gas Piping Connections	
	Steam Boiler	
	Hot Water Boiler	
	Hot Air Furnace	
	Oil Tank	
	LPG Tank	
1	Fireplace	
1	Generator	
	Other	
	Administrative Surcharge	$
	Minimum Fee	$
	State Permit Surcharge Fee	$
	TOTAL FEE	$

Reorder at:
ucc.allegramarmora.com • 609-390-1400
Allegra Marketing, Print & Mail - Marmora, NJ

BUILDING SUBCODE
TECHNICAL SECTION

Date Received
Control #

Date Issued
Permit #

A. IDENTIFICATION—APPLICANT: COMPLETE ALL APPLICABLE INFORMATION. WHEN CHANGING CONTRACTORS, NOTIFY THIS OFFICE. CALL UTILITY DIG NO: 1-800-272-1000.

Block 1385.09 Lot 16 Qualification Code

Work Site Location 681 Rolling Hills Court, Brick 08724

Owner in Fee: David FINNERTY

Tel [redacted] e-mail

Address 681 Rolling Hills Ct, Brick 08724
street municipality zip code

Contractor: **Corbin Electrical Services, Inc.** Tel. (732) 536-0444

Address **35 Vanderburg Road** e-mail

Marlboro, NJ 07746

Contractor License No. or Builder Registration No. **6419** Exp. Date

Home Improvement Contractor Registration No. or Exemption Reason (if applicable): **13VH06690800**

Federal Emp. ID No. **22-3121404** FAX: (732) 536-8547

JOB SUMMARY (Office Use Only)

PLAN REVIEW	Date	Initial
[ ] No Plans Required		
[ ] All		
[ ] Footings/Foundations		
[ ] Structural/Framework		
[ ] Exterior		
[ ] Interior		

Joint Plan Review Required:
[ ] Elec. [ ] Plumb. [ ] Fire [ ] Elevator

SUBCODE APPROVAL for PERMIT
Date:
Approved by:

SUBCODE APPROVAL for CERTIFICATE
[ ] CO [ ] CCO [ ] CA
Date:
Approved by:

INSPECTIONS Type:	Dates (Month/Day) Failure	Failure	Approval	Initial
Footing				
Footing Bonding				
Foundation				
Slab				
Frame				
Truss Sys./Bracing				
Barrier-Free				
Insulation				
Finishes -Base Layer				
Finishes -Final				
Energy				
Mechanical				
TCO				
Other				
Final				
Barrier-Free				

B. BUILDING CHARACTERISTICS

Use Group Present _____ Proposed _____

No. of Stories _____

Height of Structure _____ ft.

Area — Largest Floor _____ sq. ft.

New Bldg. Area/All Floors _____ sq. ft.

Volume of New Structure _____ cu. ft.

Max. Live Load _____

Max. Occupancy Load _____

Constr. Class Present _____ Proposed _____

If Industrialized Building:
State Approved _____ HUD _____

Est. Cost of Bldg. Work:
1. New Bldg. $
2. Rehabilitation $
3. Total (1+ 2) $ 100

C. CERTIFICATION IN LIEU OF OATH

I hereby certify that I am the (agent of) owner of record and am authorized to make this application.

Sign here:

Print name here: **Steven Corbin**

D. TECHNICAL SITE DATA

DESCRIPTION OF WORK

The generator will sit on a prefabricated concrete pad

TYPE OF WORK:
[ ] New Building
[ ] Addition
[ ] Rehabilitation
[ ] Roofing
[ ] Siding
[ ] Fence _____ Height (exceeds 6')
[ ] Sign _____ Sq. Ft.
[ ] Pool
[ ] Retaining Wall _____ Sq. Ft.
[ ] Asbestos Abatement Subchapter 8
[ ] Lead Haz. Abatement NJAC 5:17
[ ] Radon Remediation
[✓] Other Generator
[ ] Demolition

FEE (Office Use Only)
$

Administrative Surcharge $
Minimum Fee $
State Permit Surcharge Fee $
TOTAL FEE $

U.C.C. F110 (rev. 11/09)

Reorder at: ucc.allegramarmora.com • 609-390-1400
Allegra Marketing, Print & Mail - Marmora, NJ

ELECTRICAL SUBCODE
TECHNICAL SECTION

NEW JERSEY UNIFORM CONSTRUCTION CODE

Date Received 5/11/20
Control #
Date Issued
Permit # 20-0890

A. IDENTIFICATION—APPLICANT: COMPLETE ALL APPLICABLE INFORMATION. WHEN CHANGING CONTRACTORS, NOTIFY THIS OFFICE. CALL UTILITY DIG NO: 1-800-272-1000.

Block 1385.09 Lot 16 Qualification Code

Work Site Location 681 Rolling Hills Court, Brick 08724

Owner in Fee: David FINNERTY

Tel. [redacted] e-mail

Address 681 Rolling Hills Court, Brick 08724
street municipality zip code

Contractor: **Corbin Electric Services, Inc.** Tel. (732) 536-0444

Address **35 Vanderburg Road** e-mail
Marlboro, NJ 07746

Contractor License No. **6419** Exp. Date

Home Improvement Contractor Registration No. or Exemption Reason (if applicable):

Federal Emp. ID No. **22-3121404** FAX: (732) 536-8547

B. ELECTRICAL CHARACTERISTICS

Use Group Present Proposed

[ ] Pole/Pad # [ ] Temporary [ ] Other

Building Occupied as Utility Co.

Est. Cost of Elec. Work $ 10,600

C. CERTIFICATION IN LIEU OF OATH

I hereby certify that I am the (agent of) owner of record and am authorized to make this application and perform the work listed on this application.

Applicant sign/Contractor sign and seal here:

Print name here: **Steven Corbin**

[X] Licensed Elec. Contractor [ ] Certif'd Landscape Irrigation Cont'r [ ] Exempt Applicant

D. TECHNICAL SITE DATA

DESCRIPTION OF WORK:

QTY.	SIZE	ITEMS	FEE (Office Use Only)
		Lighting Fixtures	
		Receptacles	
		Switches	
		Detectors	
		Light Poles	
		Motors—Fract. HP	
		Emergency & Exit Lights	
		Communications Points	
		Alarm Devices/F.A.C. Panel	
		TOTAL NUMBERS	$
		Pool Permit/with UW Lights	
		Storable Pool/Spa/Hot Tub	
		KW Elec. Range/Receptacle	
		KW Oven/Surface Unit	
		KW Elec. Water Heater	
		KW Elec. Dryer/Receptacle	
		KW Dishwasher	
		HP Garbage Disposal	
		KW Central A/C Unit	
		HP/KW Space Heater/Air Handler	
		KW Baseboard Heat	
		HP Motors 1/+ HP	
1	20	KW Transformer/Generator	
		AMP Service	
		AMP Subpanels	
		AMP Motor Control Center	
		KW Elec. Sign/Outline Light	
1	200A		

JOB SUMMARY (Office Use Only)

PLAN REVIEW
[ ] No Plans Required
[ ] Partial -Underslab Utilities Approved
Date: Approved by:
[X] Electric Plans Approved
Date: 9-20-20 Approved by: VMM

Joint Plan Review Required:
[ ] Bldg. [ ] Plumb. [ ] Fire. [ ] Elev.

SUBCODE APPROVAL for PERMIT
Date: 4-20-2020
Approved by: VMM

SUBCODE APPROVAL for CERTIFICATE
[ ] CO [ ] CCO [X] CA
Date: 6-18-2020
Approved by: VMM

INSPECTIONS Type:	Failure	Failure	Approval	Initial
Rough				
Barrier-Free				
Trench				
Temp. Serv.				
Constr. Serv.				
TCO				
Other				
Service				
Final			6-18-2020	VMM
Barrier-Free				

Dates (Month/Day)

Temp. Cut-in-Card Date Issued
Final Cut-in-Card Date Issued
Annual Pool Inspection
Date of Grounding and Bonding Certification

Administrative Surcharge $
Minimum Fee $
State Permit Surcharge Fee $
TOTAL FEE $

U.C.C. F120 (rev. 11/09)

Reorder at:
ucc.allegramarmora.com • 609-390-1400
Allegra Marketing, Print & Mail - Marmora, NJ

CONSTRUCTION PERMIT

Date Issued 5/11/20
Control # C-20-001064
Permit # 20-0390

IDENTIFICATION Block: 1385.09 Lot: 16 Qualifier
Work Site Location: 681 ROLLING HILLS CT. Brick Township, NJ
Owner in Fee FINNERTY, DAVID A & DEANNA
681 ROLLING HILLS COURT BRICK NJ 08724
Telephone: [redacted]

Contractor CORBIN ELECTRICAL SERVICES INC
Address 35 Vanderburg Road Marlboro NJ 07746
Telephone: (732) 536-0444
Lic. No. or Bldrs. Reg. No. 13VH06690800 19HC00070800 6419
Federal Employee. No. 22-3151404

Is hereby granted permission to perform the following work:

- ☐ BUILDING
- ☐ PLUMBING
- ☐ LEAD HAZARD ABATEMENT
- ☑ ELECTRICAL
- ☐ FIRE PROTECTION
- ☐ DEMOLITION
- ☐ ELEVATOR DEVICES
- ☐ ASBESTOS ABATEMENT (Subchapter 8 only)
- ☑ OTHER

DESCRIPTION OF WORK:
GENERATOR

Note: If construction does not commence within one (1) year of date of issuance, or if construction ceases for a period of six (6) months, this permit is void.
Estimated Cost of Work $11,250

J. Neuman
Construction Official
Date 4/30/20

PAYMENTS (Office Use Only)

Building	$0
Electrical	$245
Plumbing	$0
Fire Protection	$0
Elevator Devices	$0
Other	$125.00
DCA Training Fee	$21
CO Fee	
Other	$0
Total	$391
Check No.	053
Cash	$0
Credit	$0
Collected By	

+20
441.

U.C.C. F170
equiv (rev 1/04)

1 WHITE - INSPECTOR 2 CANARY - OFFICE 3 PINK - TAX ASSESSOR 4 GOLD - APPLICANT

REQUIRED INSPECTIONS

Construction work must be inspected in accordance with the State Uniform Construction Code Regulations N.J.A.C. 5:23-2:18. This agency will carry out such periodic inspections during the progress of work as are necessary to insure that the work installed conforms with the requirements of the Uniform Construction Code.

The owner or other responsible person in charge of work must notify this agency when work is ready for any required inspections specified below. Requests for inspections must be made at least 24 hours prior to the time the inspection is desired. Inspections will be performed within three business days of the time for which they are requested. The work must not proceed in a manner which will preclude the inspection until it has been made and approval granted.

☑ Required inspections for all subcodes for one- and two-family dwellings are as follows:

1. The bottom of footing trenches before placement of footings, except that in cases of pile foundations, inspections shall be made in accordance with the requirements of the building subcode.
2. Foundations and all walls up to grade level prior to back filling.
3. All structural framing, connections, wall and roof sheathing and insulation; electrical rough wiring, panel and service installation; rough plumbing. The framing inspection shall take place after the rough electrical and plumbing inspections and after the installation of the heating, ventilation and /or air conditioning duct system. The insulation inspection shall be performed after all other subcode rough inspections and prior to the installation of any interior finish material.
4. Installation of all finished materials, sealings of exterior joints, plumbing piping, trim and fixtures; electrical wiring, devices and fixtures; mechanical systems equipment.

Additional required inspections for all subcodes of construction, for other than one- and two-family dwellings, are fire suppression systems, heat producing devices and Barrier Free subcode accessibility, if applicable.

☐ Required special inspections. The applicant by accepting the permit will be deemed to have consented to these requirements:

☑ A final inspection is required for each applicable subcode area before a final Certificate of Occupancy or Approval may be issued. The final inspections include the installation of all interior and exterior finish materials, sealing of exterior joints, mechanical system and other required equipment; electrical wiring, devices and fixtures; plumbing pipes, trim and fixtures; tests required by any provision of the adopted subcodes, Barrier Free accessibility, if applicable; and verification of compliance with NJAC 5:23-3.5, "Posting structures".

☑ A complete copy of released plans must be kept on the job site.

If you do not understand any of this information, please ask.

RECEIVING CLERK _____
DATE REC'D _____

ZONING PERMIT APPLICATION

PERMIT # ZP-20-00426
DATE ISSUED 5/11/20

BLOCK: 1385.09 LOT: 16 QUALIFIER: _____ SITE ADDRESS: 681 Rolling Hills Court

IDENTIFICATION:

1. NAME OF OWNER IN FEE: David FINNERTY
COMPLETE ADDRESS: 681 Rolling Hills Court
Brick, NJ 08724
PHONE # [redacted] EMAIL [redacted]

2. NAME OF APPLICANT: Carbin Electrical Services
APPLICANT ADDRESS: 35 Vanderburg Road
Marlboro, NJ 07746
PHONE # 732-536-0444 EMAIL: bverrius@carbinelectric.com

3. RESPONSIBLE PERSON FOR WORK: Carbin Electric - Barbara
PHONE# _____ FAX# 732-536-8547

4. SIGNATURE OF APPLICANT: [signature]

FOR OFFICE USE ONLY

FEE SUMMARY:

APPLICATION FEE: $ 50-
OTHER: $ _____
TOTAL: $ 50-

REQUIRED BY APPLICANT

RESIDENTIAL: _____
COMMERCIAL: _____
EXISTING USE: _____
PROPOSED USE _____

BOARD APPROVAL: ___ PB ___ ZB
RESOLUTION#: _____
APPROVAL DATE: _____

PROJECT DESCRIPTION: (PLEASE CHECK APPLICABLE WORK & DESCRIBE)
*NEW BUILDING: _____ *ADDITION X *ALTERATION _____ *PORCH _____ *DECK _____

POOL: ABOVE GROUND _____ IN GROUND _____ FENCE: HEIGHT _____ TYPE _____

HEIGHT: _____ (*APPLICABLE)

OTHER generator

DESCRIPTION: Install Standby generator 2'x4'x29"(H)

ZONING REVIEW:
DATE REVIEWED: 4-14-20 DATE DENIED: _____ DATE APPROVED: 4-14-20 INTLS: [illegible]

(SEE BACK PAGE)

Township of BRICK

Office Use only
Control Number:
Permit number:

Certification of compliance with Executive Order 122

Project Identification

Block 1385.09 Lot 16 Qualifier

Address 681 Rolling Hills Court Standby generator

I have reviewed and understand the restrictions on non-essential construction identified in New Jersey Governor's Executive Order 122.

☑ **I certify that the proposed work associated with this application is essential construction as it is defined by Executive Order No. 122. I understand that working in violation of this order subjects me to possible enforcement actions, including penalties imposed under, among other statutes, N.J.S.A. App. A:9-49 and -50.**

X MARC SHEINER

Please print your name

X

Signature of Owner/Agent of the Owner

GM, Carbin Electrical Services

☐ **I certify that the proposed work is considered nonessential under Executive Order 122. I acknowledge that the issuing of this permit does not constitute an approval to proceed with non-essential work. Work will not begin until the restrictions of Executive Order-122 have been lifted. I understand that working in violation of Executive Order 122 subjects me to possible enforcement actions, including penalties imposed under, among other statutes, N.J.S.A. App. A:9-49 and -50.**

X

Please print your name

X

Signature of Owner/Agent of the Owner

Information regarding EO-122 can be found here https://cv.business.nj.gov. A copy of NJ Executive Orders can be found at https://nj.gov/infobank/eo

RECEIVED

MAY 11 2020

BUILDING

Brick Township
401 Chambers Bridge Rd.
Brick, NJ 08723
(732) 262-1041

Date Issued: 5/11/20
Application Number: ZA-20-00368
Application Date: 4/14/2020
Project Number:
Permit Number: ZP20-00426
Fee: $50.00

Zoning Permit

Worksite Location: **681 ROLLING HILLS CT.**
Brick Township, NJ 08724

Owner: **FINNERTY, DAVID A & DEANNA**
Address: **681 ROLLING HILLS COURT**
BRICK, NJ 08724

Applicant: **CORBIN ELECTRICAL SERVICES INC**
Address: **35 Vanderburg Road**
Marlboro, NJ 07746

Block: **1385.09** Lot: **16** Qualifier: Zone: **R-20**

This Certifies that an application for the issuance of a Zoning Permit has been examined.

Present Use: **Single-Family Residential**

☐ Non Conforming Use ☐ Non Conforming Structure

Proposed Use: **Single-Family Residential**

Work Description:

Generator, Standby - Install a 20 KW standby generator.

The generator must be minimum 40' from the front property line, 10' from the side and rear property line.

Additional Zoning Permit is required for additional work.

Application Approved Date: 4/14/2020

Upon review it was determined that the Zoning Permit:

☑ Permitted by Ordinance
☐ Permitted by Variance approved on:
☐ Approved with Conditions
☐ Valid Nonconforming Use/Structure is established by
☐ Zoning Board of Adjustment ☐ Zoning Officer

Christopher J. Romano, Zoning Officer

4/14/2020
Date

ENGINEERING PERMIT APPLICATION

RECEIVING CLERK: _____
PERMIT #: _____

BLOCK: 1385.09 LOT: 16 ADDRESS: 681 Rolling Hills Ct.

IDENTIFICATION:

1. WORK SITE ADDRESS: 681 Rolling Hills Court
2. NAME OF OWNER IN FEE: David Finnerty
   ADDRESS: 681 Rolling Hills Ct PHONE # [redacted]
   Brick, NJ 08724 FAX #: ( ) _____
3. PRINCIPAL CONTRACTOR: Corbin Electrical Services
   ADDRESS: 35 Vanderburg Rd PHONE #: (732) 536-0444
   Marlboro, NJ 07746 FAX #: (732) 536-8547
4. ARCHITECT OR ENGINEER: _____
   ADDRESS: _____ PHONE: # ( ) _____
5. RESPONSIBLE PERSON FOR WORK: Corbin Electric
   ADDRESS: 35 Vanderburg Rd, Marlboro NJ 07746
   PHONE #: 732 536-0444 FAX #: 732 536-8547 E-MAIL: bvottius@corbinelectric.com

FEE SUMMARY:

APPLICATION FEE:	$ _____
REVIEW FEE:	$ _____
INSPECTION FEE:	$ _____
OTHER _____ :	$ _____
BOND(S):	$ _____
TOTAL:	$ _____

PROJECT DESCRIPTION: ☐ GRADING/CLEARING ☐ ROAD OPENING
☐ SOIL REMOVAL/FILL ☐ RETAINING WALL ☐ POOL
☐ BULKHEAD/DOCK ☐ DWELLING ☐ TREE REMOVAL _____
☒ OTHER Install Standby Generator
LENGTH: 4 ft WIDTH: 2 ft HEIGHT: 29"

SPECIAL CONDITIONS:

OCEAN COUNTY SOILS: _____
DRAINAGE EASEMENTS: _____
UTILITY EASEMENTS: _____
CONSERVATION EASEMENTS: _____
FEMA REQUIREMENTS: _____
D.E.P. PERMITS: _____
BOARD APPROVAL: ☐ PB ☐ ZB
APPLICATION NUMBER: _____
APPROVED DATE: _____

ENGINEERING REVIEW:

DATE RECEIVED: _____ DATE REJECTED: _____ DATE APPROVED: _____ INITIALS: _____

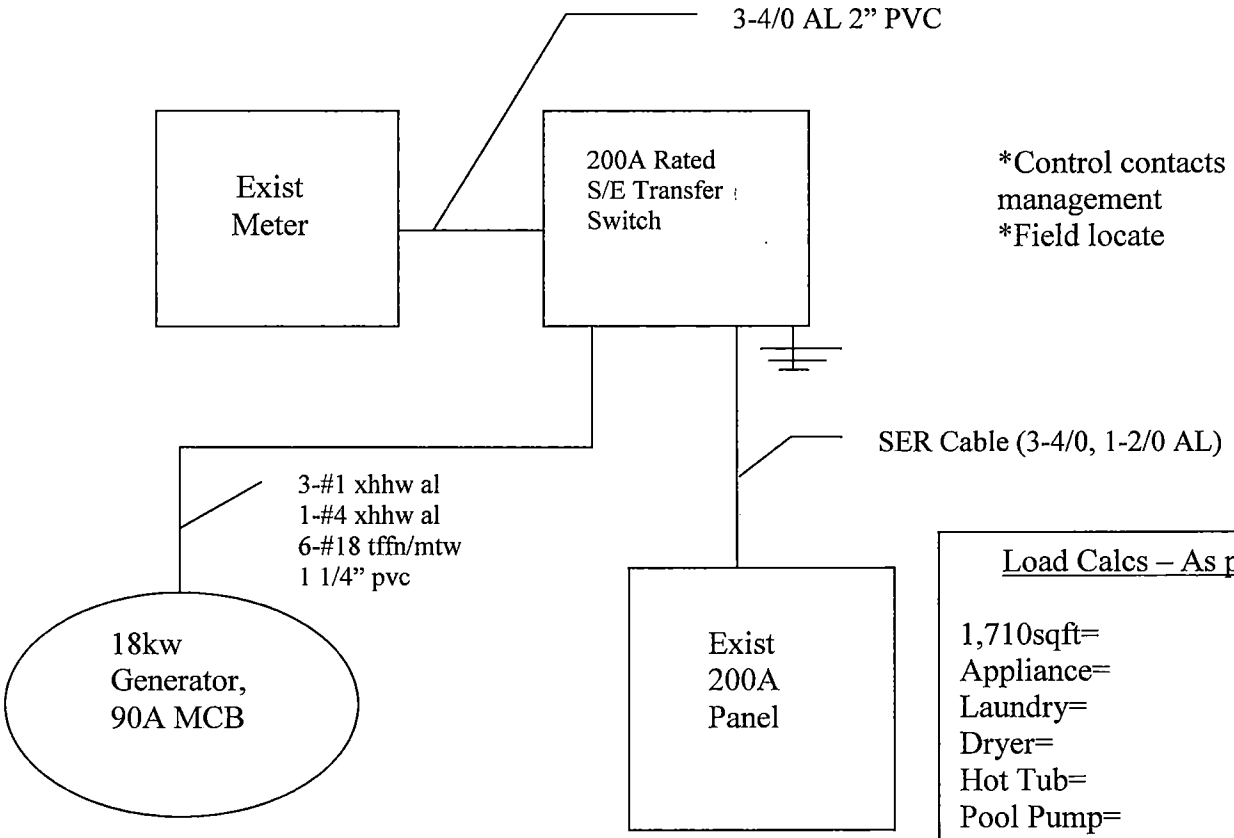

FILE COPY

GENERATOR ONE-LINE DIAGRAM

TOWNSHIP OF BRICK

RELEASED FOR PERMIT	INITIAL	DATE
Building Subcode		
Plumbing Subcode		
Fire Subcode		
Electrical Subcode		4-20-2020
Plan Reviewer		
Plans Released		
Construction Official		

Load Calcs – As per 220.82

1,710sqft=	5,130VA
Appliance=	3,000VA
Laundry=	1,500VA
Dryer=	4,320VA
Hot Tub=	7,200VA
Pool Pump=	1,119VA
Furnace=	500VA
Micro=	1,000VA
Dishwasher=	1,200VA
Total	24,969VA

Demand

1st 10kVA=	10,000VA
Bal @ 40% gen=	5,988VA
Total=	15,988VA*

*A/C & oven have been omitted due to load shed capability of generator

Finnerty
681 Rolling Hills Ct.
Brick, NJ 08724
Blk 1385.09 Lot 16
3/27/2020

Corbin Electrical Services, Inc.
35 Vanderburg Rd
Marlboro, NJ 07746
732-536-0444 (f)732-536-8547
License #6419

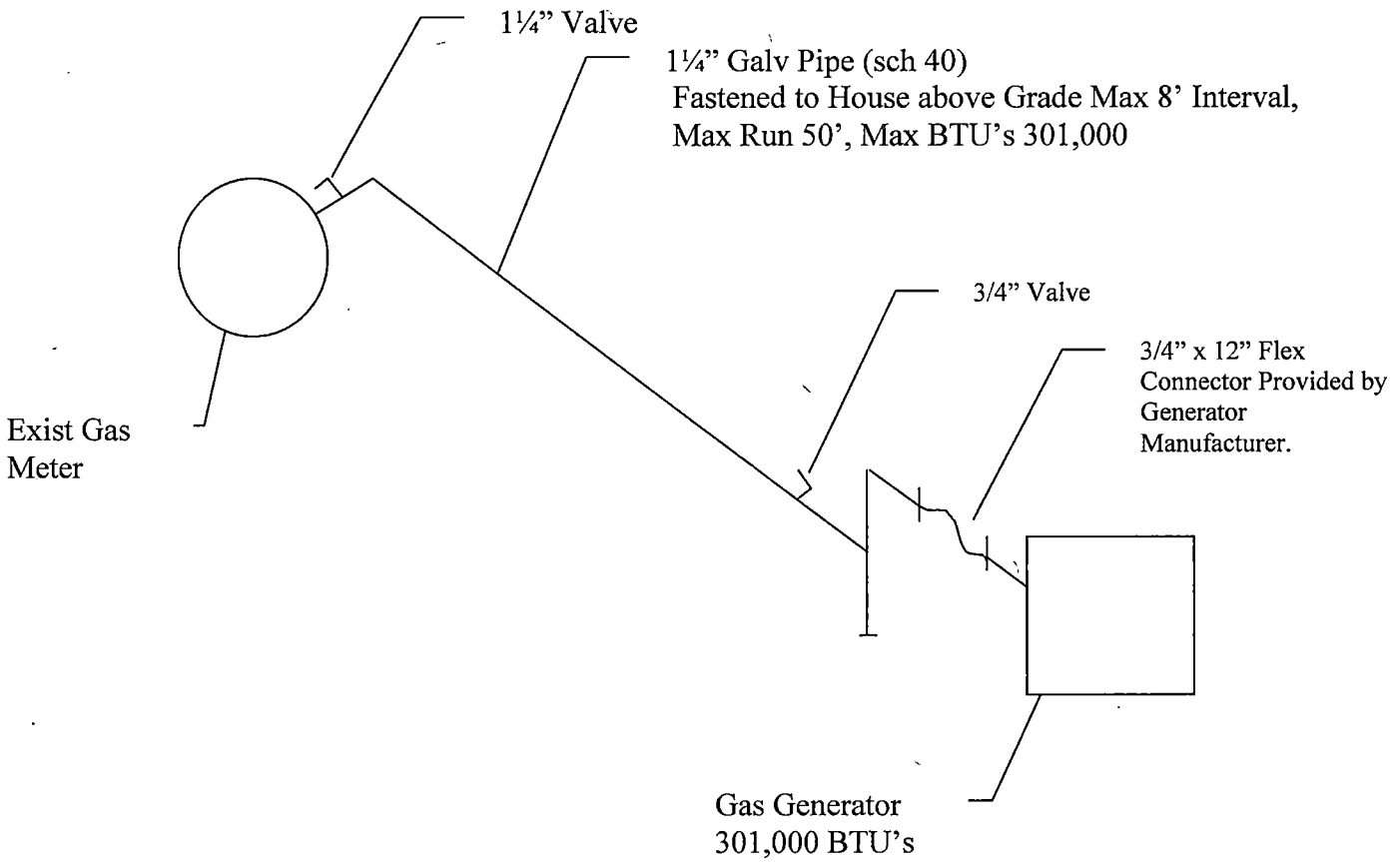

PLUMBING
APR 2020
APPROVED

FILE COPY

GAS ISOMETRIC DIAGRAM

Finnerty 681 Rolling Hills Ct. Brick, NJ 08724 Blk 1385.09 Lot 16 3/27/2020	Corbin Electrical Services, Inc. 35 Vanderburg Rd Marlboro, NJ 07746 732-536-0444 (f)732-536-8547 License #19HC00070800

THIS DOCUMENT IS PRINTED ON WATERMARKED PAPER WITH A MULTI-COLORED BACKGROUND AND MULTIPLE SECURITY FEATURES. PLEASE VERIFY AUTHENTICITY

State Of New Jersey
New Jersey Office of the Attorney General
Division of Consumer Affairs

THIS IS TO CERTIFY THAT THE

Board of Exam. of Electrical Contractors

HAS LICENSED

Steven A. Corbin
170 Wintergreen Drive
Manalapan NJ 07726

FOR PRACTICE IN NEW JERSEY AS A(N): Electrical Contractor

02/05/2018 TO 03/31/2021
VALID

34EI00641900
LICENSE/REGISTRATION/CERTIFICATION #

Signature of Licensee/Registrant/Certificate Holder

ACTING DIRECTOR

THIS DOCUMENT IS PRINTED ON WATERMARKED PAPER WITH A MULTI-COLORED BACKGROUND AND MULTIPLE SECURITY FEATURES. PLEASE VERIFY AUTHENTICITY.

State Of New Jersey
New Jersey Office of the Attorney General
Division of Consumer Affairs

THIS IS TO CERTIFY THAT THE
Board of Exam. of HVACR Contractors

HAS LICENSED

ADAM D. CORBIN
35 Vanderburg Rd
Marlboro NJ 07746

FOR PRACTICE IN NEW JERSEY AS A(N): Master HVACR Contractor

05/07/2018 TO 06/30/2020
VALID

Signature of Licensee/Registrant/Certificate Holder

19HC00070800
LICENSE/REGISTRATION/CERTIFICATION #

ACTING DIRECTOR

New Jersey Office of the Attorney General
Division of Consumer Affairs
THIS IS TO CERTIFY THAT THE
Board of Exam. of HVACR Contractors
HAS LICENSED
ADAM D. CORBIN
Master HVACR Contractor
05/07/2018 TO 06/30/2020
VALID
SIGNATURE
19HC00070800
License/Registration/Certificate #
ACTING DIRECTOR

PLEASE DETACH HERE

IF YOUR LICENSE/REGISTRATION/
CERTIFICATE ID CARD IS LOST
PLEASE NOTIFY:
Board of Exam. of HVACR Contractors
P.O. Box 47031
Newark, NJ 07101

PLEASE DETACH HERE

Installing and Connecting Gas Lines

DANGER

Explosion and Fire. Fuel and vapors are extremely flammable and explosive. No leakage of fuel is permitted. Keep fire and spark away. Failure to do so will result in death or serious injury. (000192)

IMPORTANT NOTE: Natural gas and LP vapor are highly volatile substances. Strictly adhere to all safety procedures, codes, standards, and regulations.

Gas line connections should be made by a certified contractor familiar with local codes. Always use AGA-approved gas pipe and a quality pipe sealant or joint compound.

Verify the capacity of the natural gas meter or the LP tank to provide sufficient fuel for both the generator and other operating appliances.

Shutoff Valve

The generator will require an external manual shut-off valve on the fuel line. The valve must be easily accessible. See A in *Figure 5-3.*

NOTE: Local codes determine the proper location.

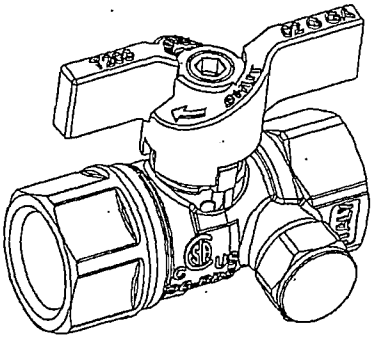

Figure 5-2. Accessory Valve with Manometer Port

NOTE: *Figure 5-2* illustrates a fuel shut-off valve with a manometer port for making fuel pressure checks. This optional accessory valve permits making pressure checks for diagnostic purposes without going into the generator enclosure.

Valves available through Generac and Independent Authorized Service Dealers (IASD):

- 1/2" ball valve, part number 0K8752
- 3/4" ball valve, part number 0K8754
- 1" ball valve, part number 0K8184
- 1-1/4" ball valve, part number 0L2844

Flexible Fuel Line

When connecting the gas line to the generator, use a listed assembly that meets the requirements of ANSI Z21.75/ CSA 6.27—Connectors for Outdoor Gas Appliances and Manufactured Homes or AGA-approved flexible fuel line in accordance with local regulations.

The flexible fuel line shall not be connected directly to the generator fuel inlet. Always connect the flexible fuel line to an approved gas fitting.

The purpose of flexible fuel line is to isolate vibration from the generator to reduce possibility of a gas leak at one of the connection points. See B in *Figure 5-3.*

NOTE: Follow all installation instructions and warnings provided with the flexible fuel line. Do not remove any labels or tags.

Sediment Trap

Some local codes require a sediment trap. The fuel regulator connection has an integrated sediment trap. See C in *Figure 5-3.*

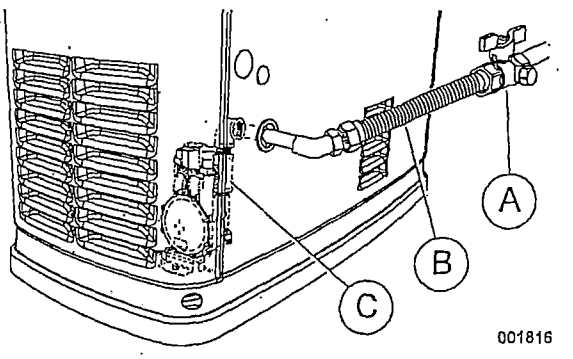

Figure 5-3. Sediment Trap, Fuel Shut-Off Valve with Manometer Port, and Flexible Fuel Line

The sediment trap must be cleaned periodically according to local codes. See the owner's manual for more information.

Checking Gas Line Connections

1. Check for leaks by spraying all connection points with a non-corrosive gas leak detection fluid. The solution should not be blown away or form bubbles.
2. Check gas pressure at the regulator in the generator by following these steps.
   - Close gas supply valve.
   - Remove the top gas pressure test port from the regulator (see *Figure 5-4*) and install the gas pressure tester (manometer).
   - Open the gas supply valve and verify the pressure is within the specified values.
   - Record static gas pressure: _____

NOTE: Gas pressure can also be tested at the manometer port on the fuel shut-off valve shown in *Figure 5-3*.

NOTE: See the owner's manual or the spec sheet for proper fuel pressure specifications. If the gas pressure is not within specifications, contact the local gas supplier.

3. Close gas valve when completed, but keep manometer connected for future tests of the generator while starting, running and under loads.

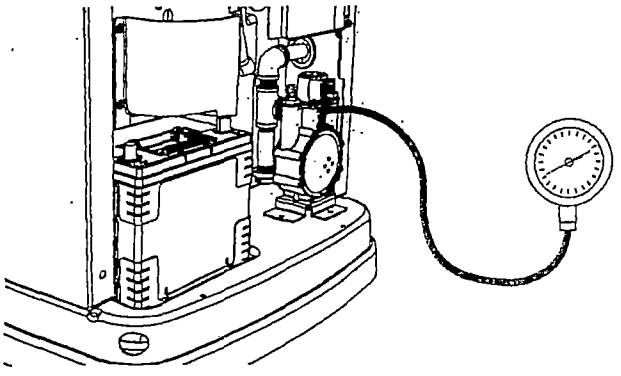

Figure 5-4. Checking Pressure with Manometer

Perform Leak Test

⚠ DANGER

Explosion and fire.Fuel and vapors are extremely flammable and explosive. No leakage of fuel is permitted. Keep fire and spark away. Failure to do so will result in death or serious injury. (000192)

All products are tested at the factory before shipping to ensure the performance and integrity of the fuel system. However, it is important to perform a final fuel system leak test before starting the generator. The entire fuel system should be tested from supply to regulator.

See *Figure 5-5*. Perform a final fuel system leak test after generator installation. The test will identify possible leaks at all connection points (A).

It is best practice to perform a fuel system leak test during normally-scheduled maintenance.

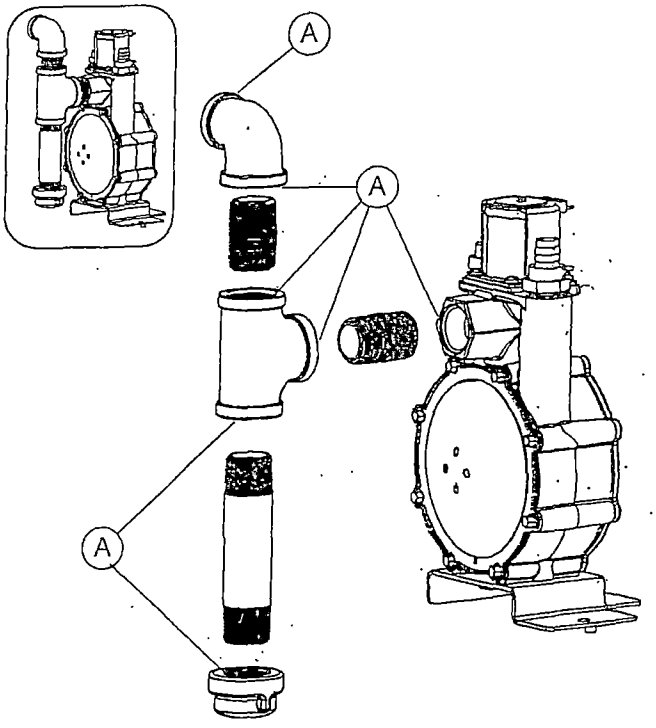

Figure 5-5. Connection Points to Leak Check

Check for leaks by spraying all connection points with a non-corrosive gas leak detection fluid. The solution should not be blown away or form bubbles.

For Use with Generac Stationary Outdoor Standby Generators

Job Name _____
Job Location _____
Engineer _____
Approval _____

Contractor _____
Approval _____
Contractor's P.O. No. _____
Representative _____
SKU _____

Dormont Supr-Safe® Flexible Gas Appliance Connectors

The flexible connection between the gas supply and the gas inlet of a Generac® Stationary Outdoor Backup/Standby Generator.

Features

- Operating Temperature: -40°F to 150°F (-40°C to 65.6°C)
- Operating Pressure: MAX 0.5psi (3.45 kPa)
- Hydrostatic Burst Pressure: MIN 250psi (1725 kPa)
- Flexible Tube Material: Annealed 304 Stainless Steel
- Flare Nut Material: Carbon Steel with Zinc Trivalent Chromate Plating
- Flare Adapter Material: Carbon Steel with Zinc Trivalent Chromate Plating

CSA Group Certificate of Compliance to Product Standards

ANSI Z21.75/CSA 6.27 – Connectors for Outdoor Gas Appliances and Manufactured Homes

Scope states "...intended for exterior use above ground for making non-rigid connections...between the gas supply and the gas inlet of an appliance for outdoor installation that is not frequently moved after installation." In addition section 1.5.4 states the connector is designed for occasional movement after installation. Repeated bending, flexing or extreme vibration must be avoided. Normal operation of a clothes dryer, rooftop HVAC unit or SIMILAR OUTDOOR APPLIANCE DOES NOT constitute extreme vibration or movement.

ANSI Z21.24/CSA 6.10 – Connectors for Gas Appliances (Excluding 60/61 Series)

C US

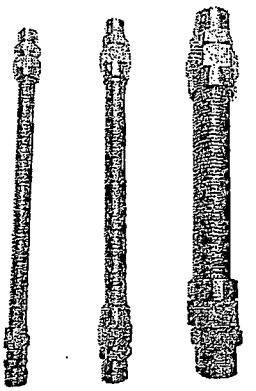

Series 30, 40 and 60

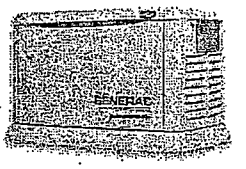

For use with Generac stationary outdoor backup/ standby generators.

Applicable Codes

ANSI Z223.1/NFPA 54 National Fuel Gas Code Section 9.6

International Fuel Gas Code (IFGC) Section 411.1

B149.1 – Natural Gas and Propane Installation Code (CSA Group) Section 6.21

Uniform Mechanical Code (UMC) Section 1313.0

Uniform Plumbing Code (UPC) Section 1212.0

Additional Approvals

Commonwealth of Massachusetts Board of State Examiners of Plumbers and Gas Fitters

Additional Testing

UL2200-2015: Stationary Engine Generator Assemblies Section 66B Vibration Test.

Product Configurations

PART NUMBER	SERIES	NOMINAL ID	NOMINAL OD	FLARE ADAPTER THREADS (MALE NPT)	NOMINAL LENGTH
		in	in	in	in
CAN30-3131-14GL	30	½	⅝	½	14
CAN40-4141-14GL	40	¾	1	¾	14
CAN60-6161-15GL	60	1-¼	1-½	1-¼	15

"CAN" prefix indicates product supplied with both English and French instructions for Canada

WARNING

All installations must completely comply with all Dormont manufacturing company warnings and instructions, national, state and local codes and all applicable ansi standards.

Dormont product specifications in U.S. customary units and metric are approximate and are provided for reference only. For precise measurements, please contact Dormont Technical Service. Dormont reserves the right to change or modify product design, construction, specifications, or materials without prior notice and without incurring any obligation to make such changes and modifications on Dormont products previously or subsequently sold. Refer to the owner's manual for warranty information.

Dormont®

Minimum Flow Capacity at Specified Pressure Drop

(Straight Length BTU/hr. **NATURAL GAS**, 0.64 SG, 1000 BTU/cu.ft.)

CONFIGURATION				PRESSURE DROP INCHES WATER COLUMN						
Part Number	SERIES	Nominal ID *in*	Nominal Length *in*	*0.50 in*	*0.75 in*	*1.00 in*	*1.25 in*	*1.50 in*	*1.75 in*	*2.00 in*
CAN30-3131-14GL	30	½	14	174,500	213,500	246,500	275,500	302,000	326,000	349,000
CAN40-4141-14GL	40	¾	14	338,500	414,500	478,500	535,000	586,000	633,000	677,000
CAN60-6161-15GL	60	1-¼	15	1,171,500	1,434,500	1,656,500	1,852,000	2,029,000	2,191,000	2,343,000

(Straight Length BTU/hr. **LP GAS**, 1.55 SG, 2500 BTU/cu.ft.)

CONFIGURATION				PRESSURE DROP INCHES WATER COLUMN						
Part Number	SERIES	Nominal ID *in*	Nominal Length *in*	*0.50 in*	*0.75 in*	*1.00 in*	*1.25 in*	*1.50 in*	*1.75 in*	*2.00 in*
CAN30-3131-14GL	30	½	14	279,200	341,600	394,400	440,800	483,200	521,600	558,400
CAN40-4141-14GL	40	¾	14	541,600	663,200	765,600	856,000	937,600	1,012,800	1,083,200
CAN60-6161-15GL	60	1-¼	15	1,874,400	2,295,200	2,650,400	2,963,200	3,246,400	3,505,600	3,748,800

EXAMPLE

Dormont part number CAN30-3131-14GL can supply a minimum of 349,000 BTU/hr. of natural gas @ 2.00 in. water column pressure drop to the generator.

© 2016 Dormont

DO NOT REMOVE THIS WARNING LABEL
Stainless Steel Gas Connector For Indoor and Outdoor Use

⚠ WARNING:

To prevent serious injury, death or property damage, fully read and follow these safety precautions during installation and use. If you smell gas, turn off gas supply and have leak repaired by a qualified agency.

- DO NOT store near or allow connector to contact strong cleaning solutions, chemical substances, solder flux, chlorinated chemicals, and any liquid containing chloride or chlorine. If these substances contact the connector, rinse immediately.
- The National Fuel Gas Code (ANSI Z223.1/NFPA 54) REQUIRES a plug or cap when gas outlet is not in use.
- **DO NOT REUSE** this gas connector or fittings on another appliance or on thesame appliance at another location.
- Keep flare surfaces free of sealing compounds (pipe thread sealant or Teflon® tape), grease and oil.
- Replace connector immediately if damaged, deteriorated or exposed to fire.
- DO NOT conceal this connector within or run through any wall, floor, partition or cabinet wall and it must not come in contact with any other objects. The entire connector must be visible for periodic inspection.
- DO NOT use the gas connector as the appliance ground.
- Use this connector on fixed or stationary appliances only. Connectors are designed for occasional movement and vibration after installation. Avoid repeated bending, flexing or extreme vibration (normal operation of a clothes dryer or rooftop HVAC unit or similar appliance is acceptable).
- For outdoor applications, this connector may be used between the gas supply and the gas inlet of an appliance that is not frequently moved after installation (including 30/40/50/60 series X 14 inches or longer for stationary standby generators), connecting the gas inlet of a manufactured home or park trailer to the gas supply or between sections of a multiple section manufactured home or park trailer.
- DO NOT use with wheeled, caster-mounted or portable appliances or to connect appliances inside of vehicles that move (RV's, trailers, etc.).
- DO NOT use on natural gas or LP gas piping systems operating at pressures exceeding 1/2 PSIG.
- DO NOT connect directly to an LP gas container.
- DO NOT connect to an LP-gas container mounted on or adjacent to a park trailer or mobile home.
- DO NOT use this connector near a swimming pool or hot tub.
- For the U.S. only, the connectors with shaded capacities in the chart below are suitable for use with a radiant tube heater, provided it is at least the length and diameter specified by the radiant tube heater instructions and is installed in strict accordance with those instructions. The 40 series, 36" connector must be PVC coated for this application. All other sizes are not suitable for use with infrared radiant tube heaters.

INSTALLATION

- The appliance and this connector must be installed according to manufacturer's installation instructions and according to local codes or ANSI Z223.1/NFPA 54 (USA) or CSA B149.1 (Canada).
- A manual shutoff valve must be readily accessible in the same room and within 6 feet of the appliance.
- Connector must reach from the gas supply to the appliance without stretching, kinking or twisting. Use only one connector and never join two or more connectors.
- DO NOT kink, twist or torque the connector when installing. Avoid sharp bends smaller than 1-1/2" internal diameter (golf ball size).
- DO NOT assemble connector nuts directly to pipe threads. Use only the adapters provided.

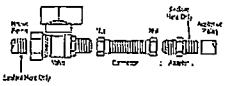

- Test final assembly for leaks using non-corrosive gas leak detection fluid. Do not use dish washing detergents, soap, or other household chemicals. Do not use matches, candles, open flame or other sources of ignition for leak testing. Thoroughly rinse with clean water to remove leak detection fluid.
- DO NOT install connector underground and avoid contact with the ground.

Connector Minimum Flow Capacity (per ANSI Z21.24/CSA 6.10 & ANSI Z21.75/CSA 6.27)									
		Straight length capacity – BTU/hr. Natural Gas 0.64 Sp. Gr, 1000 BTU/ft³ natural gas at 0.5" water column pressure drop.							
Series	Nominal ID	14"-15"	18"	24"	30"	36"	48"	60"	72"
30	½"	174,500	164,200	150,000	136,000	125,000	106,000	93,200	86,000
40	¾"	338,500	318,500	290,500	270,500	255,900	215,000	197,400	173,900
50	1"	667,500	627,000	591,000	545,200	515,900	412,700	398,000	347,000
60	1-¼"	1,171,500	1,139,000	1,075,000	1,010,500	946,000	917,500	725,500	634,000

NOTICE: To calculate flow capacity at pressure drops other than 0.5" w.c. multiply the values in the chart by: 0.632 for 0.2" w.c., 1.225 for 0.75" w.c., 1.414 for 1" w.c., 1.737 for 1.5" w.c., and 2 for 2" w.c. Contact Dormont for other conditions. For LP gas capacity multiply values in chart by 1.6 (1.55 Sp. Gr., 2,500 BTU/cu.ft.).

This connector is design certified for indoor and outdoor use and complies with the following standards:

ANSI Z21.24 / CSA 6.10 Connectors for Gas Appliances (excluding 60/61 Series)
ANSI Z21.75 / CSA 6.27 Connectors for Outdoor Gas Appliances and Manufactured Homes

This connector meets the requirements of:

ANSI Z223.1/NFPA 54, CSA B149.1, 24 CFR 3280.705 (HUD), Uniform Mechanical Code, Uniform Plumbing Code, International Fuel Gas Code

This connector has the following approvals:

Commonwealth of Massachusetts (up to 48" length)
City of New York MEA 376-92-M

MADE IN THE U.S.A.

(10/41, 50/51, 60/61 Series only)

c Us

WARNING: This product contains chemicals known to the State of California to cause cancer and birth defects or other reproductive harm.
For more information: Watts.com/prop65

TAG-D-DMP5092 1610

Dormont
1-800-DORMONT

DO NOT REMOVE THIS WARNING LABEL

GENERAC®
POWER SYSTEMS, INC.

NFPA Fire Containment Testing for Generac Air Cooled Generators

Full scale testing of a propane fired and methane powered engine generator was conducted in accordance with NFPA 37 by a testing institute experienced in fire technology and research. The objective of this program was to identify the worst-case fire scenario, the determination of safe installation standoff distances and the ability of the enclosure to contain the fire in the event of the fire scenario as required in NFPA 37.

The independent testing lab drew several conclusions from the ignition and standoff distance testing. From the ignition testing, the following conclusions were drawn:

1. Sustained ignition of a fuel leak was not possible when the engine was in operation. This was due to the large volumetric airflow from the normal operation of the engine.

2. For the propane gas leak scenario, it was experimentally determined what the most energetic ignition scenario was. Similarly, for the methane gas leak scenario, it was experimentally determined what leak duration was the worst case. This is intuitive, since propane has a smaller range of flammable limits compared to methane.

3. The oil-spray fire scenario did not yield ignition. This may be due to the exhaust manifold not being at a high enough temperature, or it could be that the spray did not have the optimal mean diameter size to facilitate ignition. Either way, this scenario is irrelevant due to the small volume of oil (1.5 quarts).

From the standoff distance testing, the following conclusions were drawn:

1. Based on these results, it is highly unlikely that a fire in these generator enclosures would pose any ignition risk to a nearby material or structure, with or without fire service personnel response.

2. The peak incident heat fluxes observed 1-1/2 ft from the generator were one to two orders of magnitude lower than typical values required for ignition of common building material. Synthetic material such as plastics, halogenated material, composites, and foams also have critical heat fluxes for ignition one to two orders of magnitude higher that what is was observed at 1-1/2 ft.

3. The worst case fire scenario is a ventilation limited condition, and as such the combustion is slow. In each of these tests, the combustible contents of the generator were slowly consumed for over two hours. It is reasonable to expect fire service personnel response in that time frame.

4. The critical parameter in these tests is the enclosure and the combustible components of the enclosure. The size of the engine does not play a major role, unless it is sufficient to require a larger or otherwise different enclosure and amount of combustible materials. As such, these results can be compared to other models with varying engine sizes, provided the enclosure and quantity/composition of contents therein remained unchanged.

GENERAC®

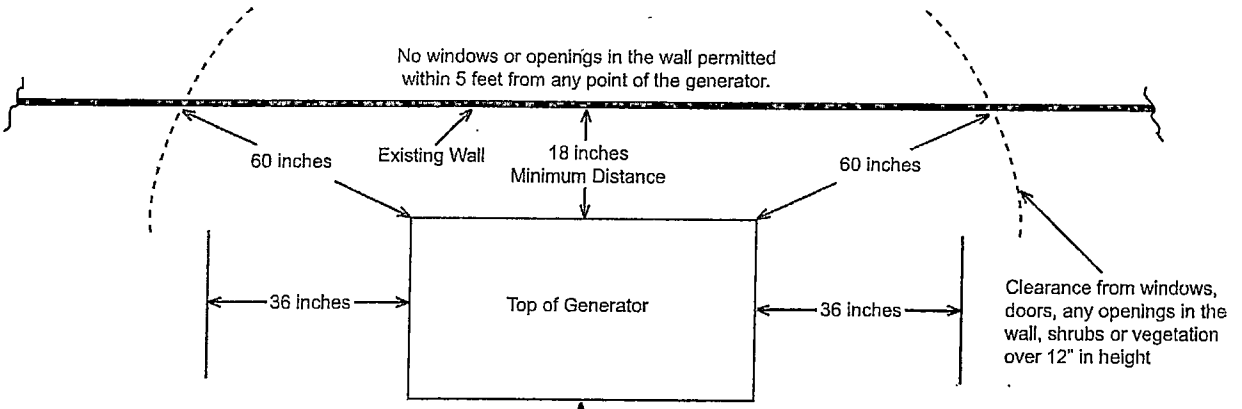

These guidelines are based upon fire testing of the generator enclosure and the manufacturer's requirement for air flow for proper operation. Local codes may be different and more restrictive than what is described here.

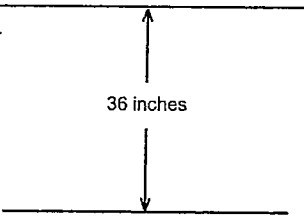

Clearance from the ends and front of the generator should be 36 inches. This would include shrubs, trees and any kind of vegetation. Clearance at the top should be a minimum of 48 inches from any structure, overhang or projections from the wall. The generator should not be placed under a deck or other structure that is closed in and would limit or contain air flow.

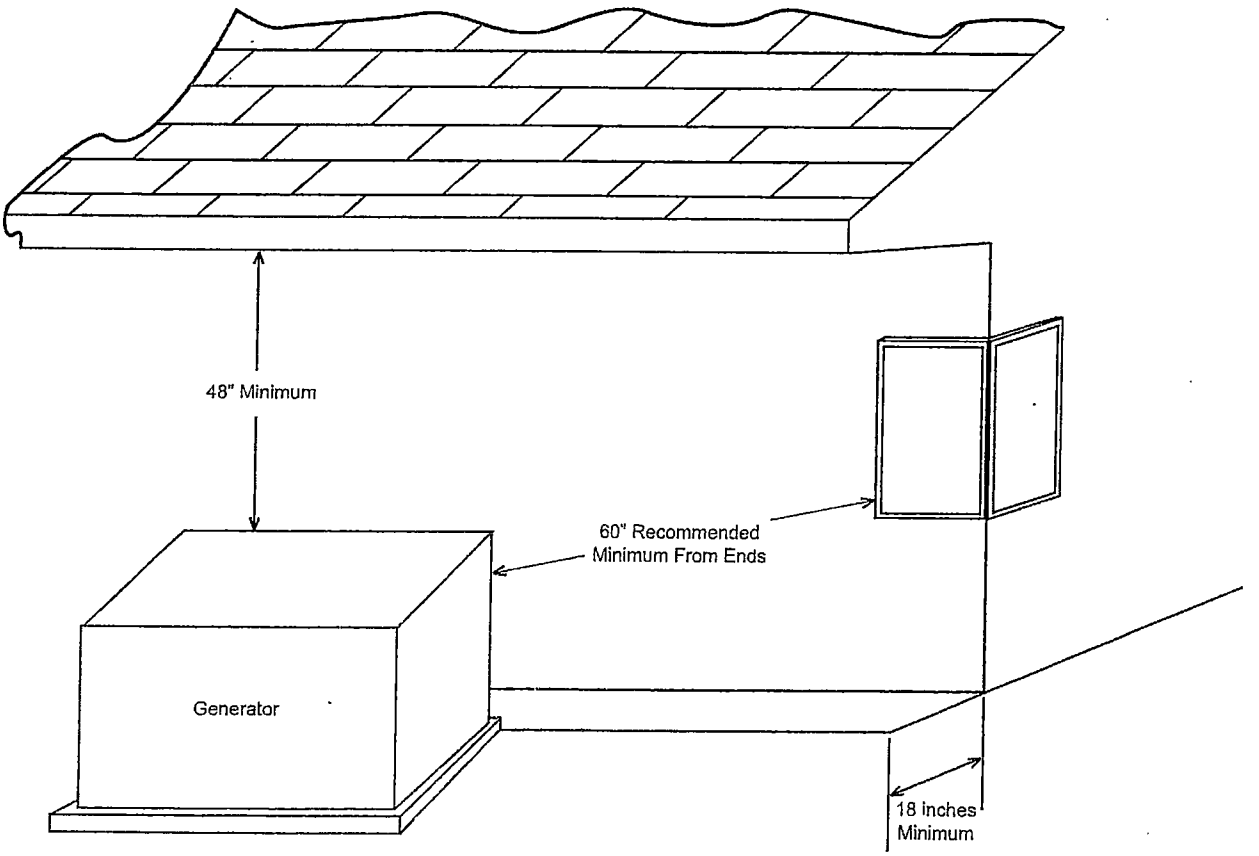

This drawing supersedes installation instructions in all Generac air-cooled installation and owner's manuals dated previous to May 26, 2007.

New Installation Guidelines for Generac Stationary Air-Cooled 8, 10, 12, 14, 16, 17 and 20 kW Generators.

The National Fire Protection Association has a standard for the installation and use of stationary combustion engines. That standard is NFPA 37 and its requirements limit the spacing of an enclosed generator set from a structure or wall.

NFPA 37, Section 4.1.4, Engines Located Outdoors. Engines, and their weatherproof housings if provided, that are installed outdoors shall be located at least 5 ft. from openings in walls and at least 5 ft. from structures having combustible walls. A minimum separation shall not be required where the following conditions exist:

1. *The adjacent wall of the structure has a fire resistance rating of at least 1 hour.*

2. *The weatherproof enclosure is constructed of noncombustible materials and it has been demonstrated that a fire within the enclosure will not ignite combustible materials outside the enclosure.*

Annex A — Explanatory Material
A4.1.4 (2) Means of demonstrating compliance are by means of full scale fire test or by calculation procedures.

Because of the limited spaces that are frequently available for installation, it has become apparent that exception (2) would be beneficial for many residential and commercial installations. With that in mind, the manufacturer contracted with an independent testing laboratory to run full scale fire tests to assure that the Generac enclosure would not ignite combustible materials outside the enclosure.

The criteria was to determine the worst case fire scenario within the generator and to determine the ignitability of items outside the engine enclosure at various distances. The Generac enclosure is constructed of non-combustible materials and the results and conclusions from the independent testing lab indicated that any fire within the generator enclosure would not pose any ignition risk to nearby combustibles or structures, with or without fire service personnel response.

Based on this testing and the requirements of NFPA 37, Sec 4.1.4, the guidelines for installation of the generators listed above are changed to 18 inches (457mm) from the back side of the generator to a stationary wall or building. For adequate maintenance and airflow clearance, the area above the generator should be at least 4 feet with a minimum of 3 feet at the front and ends of the enclosure. This would include trees, shrubs and vegetation that could obstruct airflow. See the diagram on the reverse of this page and the installation drawing within the owner's manual for details.

Generator exhaust contains DEADLY carbon monoxide gas. This dangerous gas can cause unconsciousness or death. Do not place the unit near windows, doors, fresh air intakes (furnaces, etc.) or any openings in the building or structure, including windows and doors of an attached garage.

PRINTED IN THE USA 11.09

GENERAC®
POWER SYSTEMS, INC.

NFPA Fire Containment Testing for Generac Air Cooled Generators

Full scale testing of a propane fired and methane powered engine generator was conducted in accordance with NFPA 37 by a testing institute experienced in fire technology and research. The objective of this program was to identify the worst-case fire scenario, the determination of safe installation standoff distances and the ability of the enclosure to contain the fire in the event of the fire scenario as required in NFPA 37.

The independent testing lab drew several conclusions from the ignition and standoff distance testing. From the ignition testing, the following conclusions were drawn:

1. Sustained ignition of a fuel leak was not possible when the engine was in operation. This was due to the large volumetric airflow from the normal operation of the engine.

2. For the propane gas leak scenario, it was experimentally determined what the most energetic ignition scenario was. Similarly, for the methane gas leak scenario, it was experimentally determined what leak duration was the worst case. This is intuitive, since propane has a smaller range of flammable limits compared to methane.

3. The oil-spray fire scenario did not yield ignition. This may be due to the exhaust manifold not being at a high enough temperature, or it could be that the spray did not have the optimal mean diameter size to facilitate ignition. Either way, this scenario is irrelevant due to the small volume of oil (1.5 quarts).

From the standoff distance testing, the following conclusions were drawn:

1. Based on these results, it is highly unlikely that a fire in these generator enclosures would pose any ignition risk to a nearby material or structure, with or without fire service personnel response.

2. The peak incident heat fluxes observed 1-1/2 ft from the generator were one to two orders of magnitude lower than typical values required for ignition of common building material. Synthetic material such as plastics, halogenated material, composites, and foams also have critical heat fluxes for ignition one to two orders of magnitude higher that what is was observed at 1-1/2 ft.

3. The worst case fire scenario is a ventilation limited condition, and as such the combustion is slow. In each of these tests, the combustible contents of the generator were slowly consumed for over two hours. It is reasonable to expect fire service personnel response in that time frame.

4. The critical parameter in these tests is the enclosure and the combustible components of the enclosure. The size of the engine does not play a major role, unless it is sufficient to require a larger or otherwise different enclosure and amount of combustible materials. As such, these results can be compared to other models with varying engine sizes, provided the enclosure and quantity/composition of contents therein remained unchanged.

GENERAC®

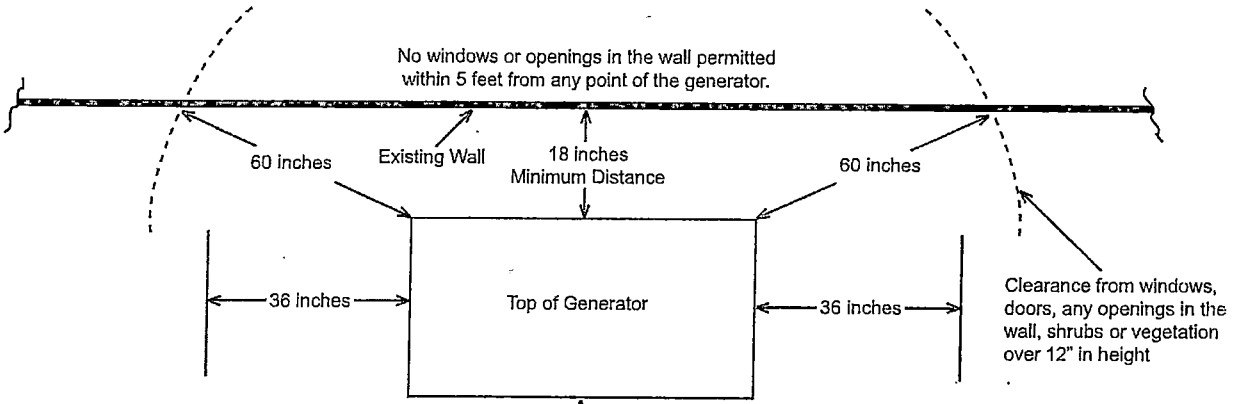

These guidelines are based upon fire testing of the generator enclosure and the manufacturer's requirement for air flow for proper operation. Local codes may be different and more restrictive than what is described here.

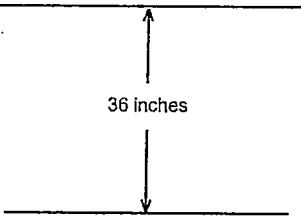

Clearance from the ends and front of the generator should be 36 inches. This would include shrubs, trees and any kind of vegetation. Clearance at the top should be a minimum of 48 inches from any structure, overhang or projections from the wall. The generator should not be placed under a deck or other structure that is closed in and would limit or contain air flow.

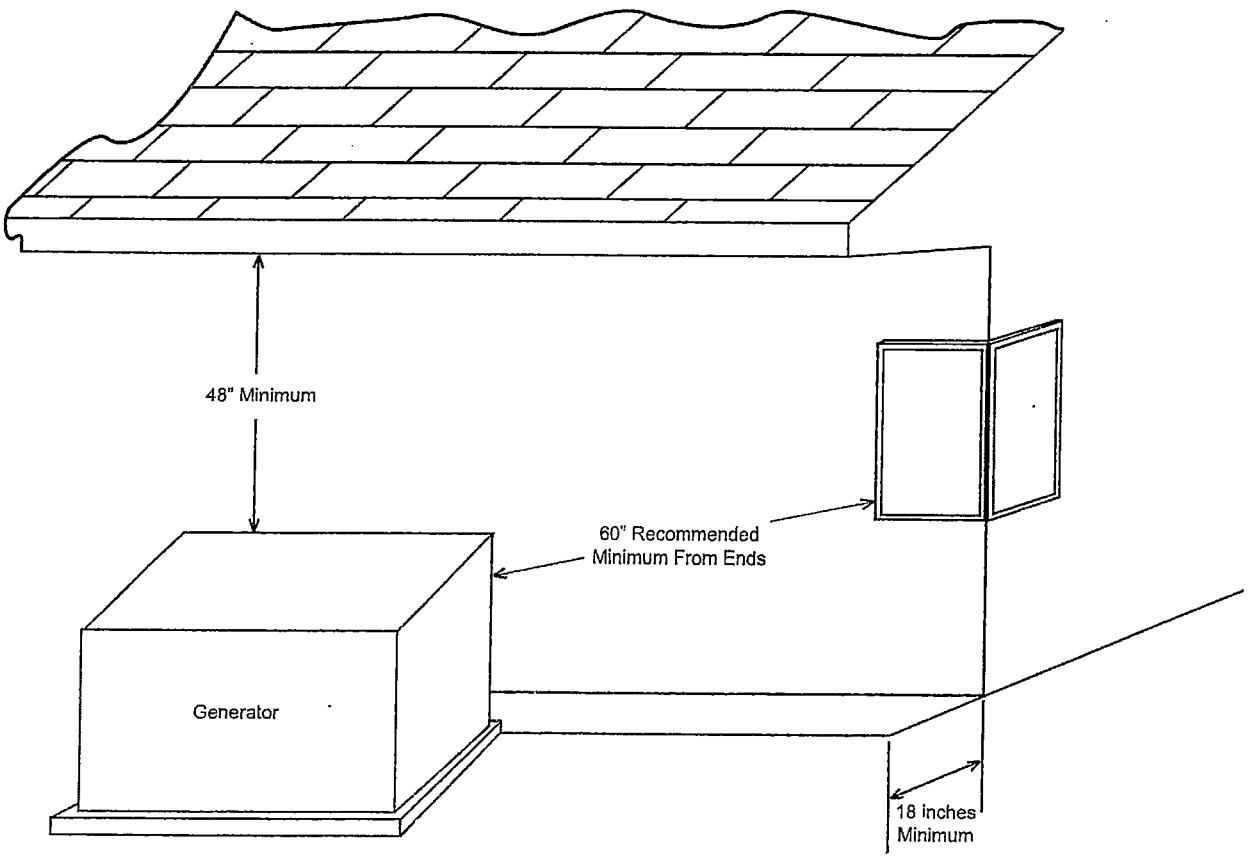

This drawing supersedes installation instructions in all Generac air-cooled installation and owner's manuals dated previous to May 26, 2007.

New Installation Guidelines for Generac Stationary Air-Cooled 8, 10, 12, 14, 16, 17 and 20 kW Generators.

The National Fire Protection Association has a standard for the installation and use of stationary combustion engines. That standard is NFPA 37 and its requirements limit the spacing of an enclosed generator set from a structure or wall.

NFPA 37, Section 4.1.4, Engines Located Outdoors. Engines, and their weatherproof housings if provided, that are installed outdoors shall be located at least 5 ft. from openings in walls and at least 5 ft. from structures having combustible walls. A minimum separation shall not be required where the following conditions exist:

1. *The adjacent wall of the structure has a fire resistance rating of at least 1 hour.*

2. *The weatherproof enclosure is constructed of noncombustible materials and it has been demonstrated that a fire within the enclosure will not ignite combustible materials outside the enclosure.*

Annex A — Explanatory Material
A4.1.4 (2) Means of demonstrating compliance are by means of full scale fire test or by calculation procedures.

Because of the limited spaces that are frequently available for installation, it has become apparent that exception (2) would be beneficial for many residential and commercial installations. With that in mind, the manufacturer contracted with an independent testing laboratory to run full scale fire tests to assure that the Generac enclosure would not ignite combustible materials outside the enclosure.

The criteria was to determine the worst case fire scenario within the generator and to determine the ignitability of items outside the engine enclosure at various distances. The Generac enclosure is constructed of non-combustible materials and the results and conclusions from the independent testing lab indicated that any fire within the generator enclosure would not pose any ignition risk to nearby combustibles or structures, with or without fire service personnel response.

Based on this testing and the requirements of NFPA 37, Sec 4.1.4, the guidelines for installation of the generators listed above are changed to 18 inches (457mm) from the back side of the generator to a stationary wall or building. For adequate maintenance and airflow clearance, the area above the generator should be at least 4 feet with a minimum of 3 feet at the front and ends of the enclosure. This would include trees, shrubs and vegetation that could obstruct airflow. See the diagram on the reverse of this page and the installation drawing within the owner's manual for details.

Generator exhaust contains DEADLY carbon monoxide gas. This dangerous gas can cause unconsciousness or death. Do not place the unit near windows, doors, fresh air intakes (furnaces, etc.) or any openings in the building or structure, including windows and doors of an attached garage.

PRINTED IN THE USA 11.09

16/20/22 kW

GENERAC®

GUARDIAN® SERIES
Residential Standby Generators
Air-Cooled Gas Engine

INCLUDES:

- True Power™ Electrical Technology
- Two Line LCD Multilingual Digital Evolution™ Controller (English/Spanish/French/Portuguese)
- Two Transfer Switch Options Available: 100 Amp, 16 Circuit Switch or 200 Amp Service Rated Smart Switch. See Page 5 for Details.
- Electronic Governor
- Standard Wi-Fi™ Remote Monitoring
- System Status & Maintenance Interval LED Indicators
- Sound Attenuated Enclosure
- Flexible Fuel Line Connector
- Direct-To-Dirt Composite Mounting Pad
- Natural Gas or LP Gas Operation
- 5 Year Limited Warranty
- Listed and Labeled by the Southwest Research Institute allowing installation as close as 18" (457 mm) to a structure.*
  **Must be located away from doors, windows, and fresh air intakes and in accordance with local codes.*
  https://assets.swri.org/library/DirectoryOfListedProducts/ConstructionIndustry/973_DoC_204_13204-01-01_Rev9.pdf

Standby Power Rating

Models G007036-1, G007037-1 (Aluminum - Bisque) - 16 kW 60 Hz
Model G007035-1 (Aluminum - Bisque) - 16 kW 60 Hz
Models G007039-1, G007038-1 (Aluminum - Bisque) - 20 kW 60 Hz
Models G007043-2, G007042-2 (Aluminum - Bisque) - 22 kW 60 Hz

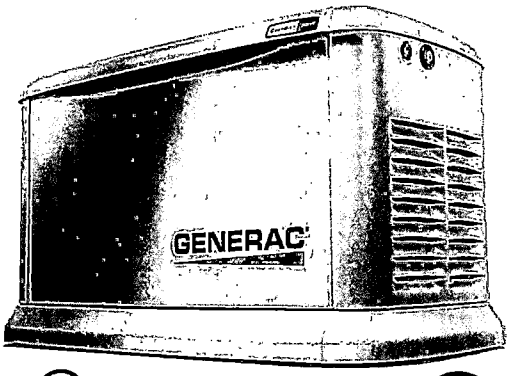

c UL us LISTED QUIET TEST™ Mobile Link

Note: CUL certification only applies to unbundled units and units packaged with limited circuit switches. Units packaged with the Smart Switch are UL certified in the USA only.

FEATURES

- **INNOVATIVE ENGINE DESIGN & RIGOROUS TESTING** are at the heart of Generac's success in providing the most reliable generators possible. Generac's G-Force engine lineup offers added peace of mind and reliability for when you need it the most. The G-Force series engines are purpose built and designed to handle the rigors of extended run times in high temperatures and extreme operating conditions.
- **TRUE POWER™ ELECTRICAL TECHNOLOGY:** Superior harmonics and sine wave form produce less than 5% Total Harmonic Distortion for utility quality power. This allows confident operation of sensitive electronic equipment and micro-chip based appliances, such as variable speed HVAC systems.
- **TEST CRITERIA:**
  - √ **PROTOTYPE TESTED**
  - √ **SYSTEM TORSIONAL TESTED**
  - √ **NEMA MG1-22 EVALUATION**
  - √ **MOTOR STARTING ABILITY**
- **MOBILE LINK™ REMOTE MONITORING:** FREE with every Guardian Series Home standby generator. Allows you to monitor the status of your generator from anywhere in the world using a smartphone, tablet, or PC. Easily access information such as the current operating status and maintenance alerts. Connect your account to your authorized service dealer for fast, friendly and proactive service. With Mobile Link, you are taken care of before the next power outage.
- **SOLID-STATE, FREQUENCY COMPENSATED VOLTAGE REGULATION:** This state-of-the-art power maximizing regulation system is standard on all Generac models. It provides optimized FAST RESPONSE to changing load conditions and MAXIMUM MOTOR STARTING CAPABILITY by electronically torque-matching the surge loads to the engine. Digital voltage regulation at ±1%.
- **SINGLE SOURCE SERVICE RESPONSE** from Generac's extensive dealer network provides parts and service know-how for the entire unit, from the engine to the smallest electronic component.
- **GENERAC TRANSFER SWITCHES:** Long life and reliability are synonymous with GENERAC POWER SYSTEMS. One reason for this confidence is that the GENERAC product line includes its own transfer systems and controls for total system compatibility.

THE GENERAC PROMISE

USA ENGINEERED & BUILT* 24/7 • 365 CUSTOMER CARE 5 YEAR LIMITED WARRANTY Mobile Link ISO 9001:2008

*Assembled in the USA using domestic and foreign parts.

GENERAC®

16/20/22 kW

features and benefits

Engine

Generac G-Force design	Maximizes engine "breathing" for increased fuel efficiency. Plateau honed cylinder walls and plasma moly rings helps the engine run cooler, reducing oil consumption resulting in longer engine life.
"Spiny-lok" cast iron cylinder walls	Rigid construction and added durability provide long engine life.
Electronic ignition/spark advance	These features combine to assure smooth, quick starting every time.
Full pressure lubrication system	Pressurized lubrication to all vital bearings means better performance, less maintenance and longer engine life. Now featuring up to a 2 year/200 hour oil change interval.
Low oil pressure shutdown system	Shutdown protection prevents catastrophic engine damage due to low oil.
High temperature shutdown	Prevents damage due to overheating.

Generator

Revolving field	Allows for a smaller, light weight unit that operates 25% more efficiently than a revolving armature generator.
Skewed stator	Produces a smooth output waveform for compatibility with electronic equipment.
Displaced phase excitation	Maximizes motor starting capability.
Automatic voltage regulation	Regulates the output voltage to ±1% prevents damaging voltage spikes.
UL 2200 listed	For your safety.

Transfer Switch[1] (if applicable)

Fully automatic	Transfers your vital electrical loads to the energized source of power.
NEMA 3R	Can be installed inside or outside for maximum flexibility.
Remote mounting	Mounts near your existing distribution panel for simple, low-cost installation.

Evolution™ Controls

Auto/Manual/Off illuminated buttons	Selects the operating mode and provides easy, at-a-glance status indication in any condition.
Two-line LCD multilingual display	Provides homeowners easily visible logs of history, maintenance and events up to 50 occurrences.
Sealed, raised buttons	Smooth, weather-resistant user interface for programming and operations.
Utility voltage sensing	Constantly monitors utility voltage, setpoints 65% dropout, 80% pick-up, of standard voltage.
Generator voltage sensing	Constantly monitors generator voltage to ensure the cleanest power delivered to the home.
Utility interrupt delay	Prevents nuisance start-ups of the engine, adjustable 2-1500 seconds from the factory default setting of five (5) seconds by a qualified dealer.
Engine warm-up	Ensures engine is ready to assume the load, setpoint approximately 5 seconds.
Engine cool-down	Allows engine to cool prior to shutdown, setpoint approximately 1 minute.
Programmable exercise	Operates engine to prevent oil seal drying and damage between power outages by running the generator for 5 minutes every other week. Also offers a selectable setting for weekly or monthly operation providing flexibility and potentially lower fuel costs to the owner.
Smart battery charger	Delivers charge to the battery only when needed at varying rates depending on outdoor air temperature. Compatible with lead acid and AGM-style batteries.
Main line circuit breaker	Protects generator from overload.
Electronic governor	Maintains constant 60 Hz frequency.

Unit

SAE weather protective enclosure	Sound attenuated enclosures ensure quiet operation and protection against mother nature, withstanding winds up to 150 mph. Hinged key locking roof panel for security. Lift-out front for easy access to all routine maintenance items. Electrostatically applied textured epoxy paint for added durability.
Enclosed critical grade muffler	Quiet, critical grade muffler is mounted inside the unit to prevent injuries.
Small, compact, attractive	Makes for an easy, eye appealing installation, as close as 18" (457 mm) away from a building.

Installation System

1 ft (305 mm) flexible fuel line connector	Absorbs any generator vibration when connected to rigid pipe.
Direct-to-dirt composite mounting pad	Complex lattice design prevents settling or sinking of the generator system.
Integral sediment trap	Prevents particles and moisture from entering the fuel regulator and engine, prolonging engine life.

Remote Monitoring

Ability to view generator status	Monitor your generator via your smartphone, tablet, or computer at any time via the Mobile Link application for complete peace of mind
Ability to view generator Exercise/Run and Total Hours	Review the generator's complete protection profile for exercise hours and total hours
Ability to view generator maintenance information	Provides maintenance information for your specific model generator when scheduled maintenance is due
Monthly report with previous month's activity.	Detailed monthly reports provide historical generator information
Ability to view generator battery information	Built in battery diagnostics displaying current state of the battery
Weather information	Provides detailed local ambient weather conditions for generator location

GENERAC

16/20/22 kW

specifications

Generator

Model	G007035-1, G007036-1, G007037-1 (16 kW)	G007038-1, G007039-1 (20 kW)	G007042-2, G007043-2 (22 kW)
Rated Maximum Continuous Power Capacity (LP)	16,000 Watts*	20,000 Watts*	22,000 Watts*
Rated Maximum Continuous Power Capacity (NG)	16,000 Watts*	18,000 Watts*	19,500 Watts *
Rated Voltage	240	240	240
Rated Maximum Continuous Load Current – 240 Volts (LP/NG)	66.7 / 66.7	83.3 / 75.0	91.7 / 81.3
Total Harmonic Distortion	Less than 5%	Less than 5%	Less than 5%
Main Line Circuit Breaker	70 Amp	90 Amp	100 Amp
Phase	1	1	1
Number of Rotor Poles	2	2	2
Rated AC Frequency	60 Hz	60 Hz	60Hz
Power Factor	1.0	1.0	1.0
Battery Requirement (not included)	12 Volts, Group 26R 540 CCA Minimum or Group 35AGM 650 CCA Minimum		
Unit Weight (lb/kg)	409 / 186	448 / 203	466 / 211
Dimensions (L x W x H) in/mm	48 x 25 x 29 / 1 218 x 638 x 732		
Sound output in dB(A) at 23 ft (7 m) with generator operating at normal load**	67	67	67
Sound output in dB(A) at 23 ft (7 m) with generator in Quiet-Test™ low-speed exercise mode**	55	55	57
Exercise duration	5 min	5 min	5 min

Engine

Type of Engine	GENERAC G-Force 1000 Series		
Number of Cylinders	2	2	2
Displacement	999 cc	999 cc	999 cc
Cylinder Block	Aluminum w/ Cast Iron Sleeve		
Valve Arrangement	Overhead Valve	Overhead Valve	Overhead Valve
Ignition System	Solid-state w/ Magneto	Solid-state w/ Magneto	Solid-state w/ Magneto
Governor System	Electronic	Electronic	Electronic
Compression Ratio	9.5:1	9.5:1	9.5:1
Starter	12 VDC	12 VDC	12 VDC
Oil Capacity Including Filter	Approx. 1.9 qt / 1.8 L	Approx. 1.9 qt / 1.8 L	Approx. 1.9 qt / 1.8 L
Operating rpm	3,600	3,600	3,600
Fuel Consumption			
Natural Gas ft³/hr (m³/hr)			
1/2 Load	218 (6.17)	204 (5.78)	228 (6.46)
Full Load	309 (8.75)	301 (8.52)	327 (9.26)
Liquid Propane ft³/hr (gal/hr) [l/hr]			
1/2 Load	74 (2.03) [7.70]	87 (2.37) [8.99]	92 (2.53) [9.57]
Full Load	107 (2.94) [11.11]	130 (3.56) [13.48]	142 (3.90) [14.77]

Note: **Fuel pipe must be sized for full load.** Required fuel pressure to generator fuel inlet at all load ranges - 3.5-7" water column (7-13 mm mercury) for natural gas, 10-12" water column (19-22 mm mercury) for LP gas. For BTU content, multiply ft³/hr x 2500 (LP) or ft³/hr x 1000 (NG). For Megajoule content, multiply m³/hr x 93.15 (LP) or m³/hr x 37.26 (NG)

Controls

Two-Line Plain Text Multilingual LCD Display	Simple user interface for ease of operation.
Mode Buttons:Auto	Automatic Start on Utility failure. 7 day exerciser.
Manual	Start with starter control, unit stays on. If utility fails, transfer to load takes place.
Off	Stops unit. Power is removed. Control and charger still operate.
Ready to Run/Maintenance Messages	Standard
Engine Run Hours Indication	Standard
Programmable start delay between 2-1500 seconds	Standard (programmable by dealer only)
Utility Voltage Loss/Return to Utility Adjustable (Brownout Setting)	From 140-171 V / 190-216 V
Future Set Capable Exerciser/Exercise Set Error Warning	Standard
Run/Alarm/Maintenance Logs	50 Events Each
Engine Start Sequence	Cyclic cranking: 16 sec on, 7 rest (90 sec maximum duration).
Starter Lock-out	Starter cannot re-engage until 5 sec after engine has stopped.
Smart Battery Charger	Standard
Charger Fault/Missing AC Warning	Standard
Low Battery/Battery Problem Protection and Battery Condition Indication	Standard
Automatic Voltage Regulation with Over and Under Voltage Protection	Standard
Under-Frequency/Overload/Stepper Overcurrent Protection	Standard
Safety Fused/Fuse Problem Protection	Standard
Automatic Low Oil Pressure/High Oil Temperature Shutdown	Standard
Overcrank/Overspeed (@ 72 Hz)/rpm Sense Loss Shutdown	Standard
High Engine Temperature Shutdown	Standard
Internal Fault/Incorrect Wiring Protection	Standard
Common External Fault Capability	Standard
Field Upgradable Firmware	Standard

**Sound levels are taken from the front of the generator. Sound levels taken from other sides of the generator may be higher depending on installation parameters. Rating definitions - Standby: Applicable for supplying emergency power for the duration of the utility power outage. No overload capability is available for this rating. (All ratings in accordance with BS5514, ISO3046 and DIN6271). * Maximum kilovolt amps and current are subject to and limited by such factors as fuel Btu/megajoule content, ambient temperature, altitude, engine power and condition, etc. Maximum power decreases about 3.5 percent for each 1,000 feet (304.8 meters) above sea level; and also will decrease about 1 percent for each 6 °C (10 °F) above 16 °C (60 °F).

Limited Circuits Switch Features

- 16 space, 24 circuit, breakers not included.
- Electrically operated, mechanically-held contacts for fast, positive connections
- Rated for all classes of load, 100% equipment rated, both inductive and resistive.
- 2-pole, 250 VAC contactors.
- 30 millisecond transfer time.
- Dual coil design.
- Rated for both copper and aluminum conductors.
- Main contacts are silver plated or silver alloy to resist welding and sticking.
- NEMA/UL 3R aluminum outdoor enclosure allows for indoor or outdoor mounting flexibility.
- Multi listed for use with 1" standard, tandem, GFCI and AFCI breakers from Siemens, Murray, Eaton and Square D for the most flexible and cost effective install.

Model	G007036-1 (16kW)
No. of Poles	2
Current Rating (Amps)	100
Voltage Rating (VAC)	120 / 240, 1Ø
Utility Voltage Monitor (Fixed)*	
-Pick-up	80%
-Dropout	65%
Return to Utility*	approx. 15 sec
Exercises bi-weekly for 5 minutes*	Standard
UL Listed	Standard
Total Circuits Available	24
Tandem Breaker Capabilities	8 tandems
Circuit Breaker Protected Available RMS Symmetrical Fault Current @ 250 Volts	10,000

*Function of Evolution Controller
Exercise can be set to weekly or monthly

Dimensions

	Height		Width		Depth
	H1	H2	W1	W2	
in	26.75	30.1	10.5	13.5	6.91
mm	679.4	764.3	266.7	343.0	175.4

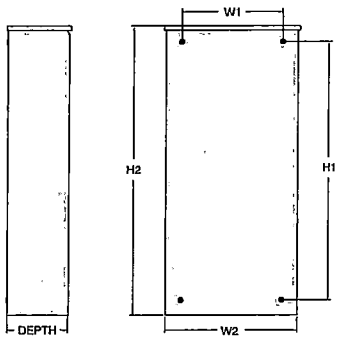

Wire Ranges		
Conductor Lug	Neutral Lug	Ground Lug
1/0 - #14	2/0 - #14	2/0 - #14

Service Rated Smart Switch Features

- Includes Digital Power Management Technology standard (DPM).
- Intelligently manages up to four air conditioner loads with no additional hardware.
- Up to four more large (240 VAC) loads can be managed when used in conjunction with Smart Management Modules (SMMs).
- Electrically operated, mechanically-held contacts for fast, clean connections.
- Rated for all classes of load, 100% equipment rated, both inductive and resistive.
- 2-pole, 250 VAC contactors.
- Service equipment rated, dual coil design.
- Rated for both aluminum and copper conductors.
- Main contacts are silver plated or silver alloy to resist welding and sticking.
- NEMA/UL 3R aluminum outdoor enclosure allows for indoor or outdoor mounting flexibility.

Model	G007037-1 (16 kW)/G007039-1 (20 kW)/ G007043-2 (22 kW)
No. of Poles	2
Current Rating (Amps)	200
Voltage Rating (VAC)	120/240, 1Ø
Utility Voltage Monitor (Fixed)*	
-Pick-up	80%
-Dropout	65%
Return to Utility*	approx. 13 sec
Exercises bi-weekly for 5 minutes*	Standard
UL Listed	Standard
Enclosure Type	NEMA/UL 3R
Circuit Breaker Protected	22,000
Lug Range	250 MCM - #6

*Function of Evolution Controller
Exercise can be set to weekly or monthly

Dimensions

	200 Amps 120/240, 1ø Open Transition Service Rated				
	Height		Width		Depth
	H1	H2	W1	W2	
in	26.75	30.1	10.5	13.5	6.91
mm	679.4	764.3	266.7	343.0	175.4

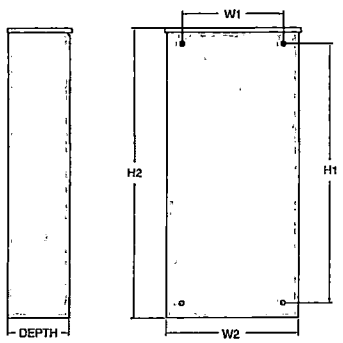

GENERAC

16/20/22 kW

available accessories

Model #	Product	Description
G007005-0	Wi-Fi LP Fuel Level Monitor	The Wi-Fi enabled LP fuel level monitor provides constant monitoring of the connected LP fuel tank. Monitoring the LP tank's fuel level is an important step in making sure your generator is ready to run during an unexpected power failure. Status alerts are available through a free application to notify when your LP tank is in need of a refill.
G005819-0	26R Wet Cell Battery	Every standby generator requires a battery to start the system. Generac offers the recommended 26R wet cell battery for use with all air-cooled standby product (excluding PowerPact®).
G007101-0	Battery Pad Warmer	The pad warmer rests under the battery. Recommended for use if the temperature regularly falls below 0 °F (-18 °C). (Not necessary for use with AGM-style batteries).
G007102-0	Oil Warmer	Oil warmer slips directly over the oil filter. Recommended for use if the temperature regularly falls below 0 °F (-18 °C).
G007103-1	Breather Warmer	The breather warmer is for use in extreme cold weather applications. For use with Evolution controllers only in climates where heavy icing occurs.
G005621-0	Auxiliary Transfer Switch Contact Kit	The auxiliary transfer switch contact kit allows the transfer switch to lock out a single large electrical load you may not need. Not compatible with 50 amp pre-wired switches.
G007027-0 - Bisque	Fascia Base Wrap Kit (Standard on 22 kW)	The fascia base wrap snaps together around the bottom of the new air cooled generators. This offers a sleek, contoured appearance as well as offering protection from rodents and insects by covering the lifting holes located in the base.
G005703-0 - Bisque	Paint Kit	If the generator enclosure is scratched or damaged, it is important to touch up the paint to protect from future corrosion. The paint kit includes the necessary paint to properly maintain or touch up a generator enclosure.
G006485-0	Scheduled Maintenance Kit	Generac's scheduled maintenance kits provide all the hardware necessary to perform complete routine maintenance on a Generac automatic standby generator.
G006873-0	Smart Management Module (50 Amps)	Smart Management Modules are used in conjunction with the Automatic Transfer Switch to increase its power management capabilities. It provides additional power management flexibility not found in any other power management system.

dimensions & UPCs

Dimensions shown are approximate. Refer to installation manual for exact dimensions. DO NOT USE THESE DIMENSIONS FOR INSTALLATION PURPOSES.

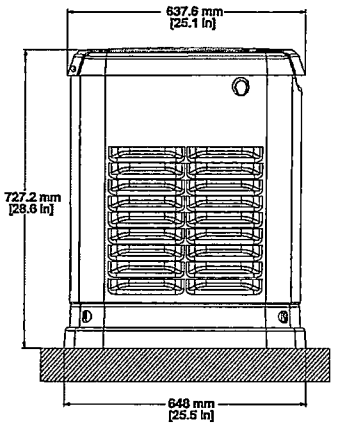

LEFT SIDE VIEW

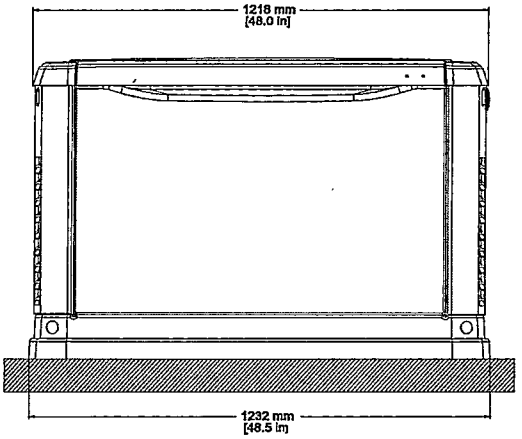

FRONT VIEW

Model	UPC
G007035-1	696471074161
G007036-1	696471074154
G007037-1	696471074178
G007038-1	696471074185
G007039-1	696471074192
G007042-2	696471074208
G007043-2	696471074215

GENERAC®

Generac Power Systems, Inc. • S45 W29290 HWY. 59, Waukesha, WI 53189 • generac.com

©2018 Generac Power Systems, Inc. All rights reserved. All specifications are subject to change without notice. Part No. 10000000194-H (8/01/18)

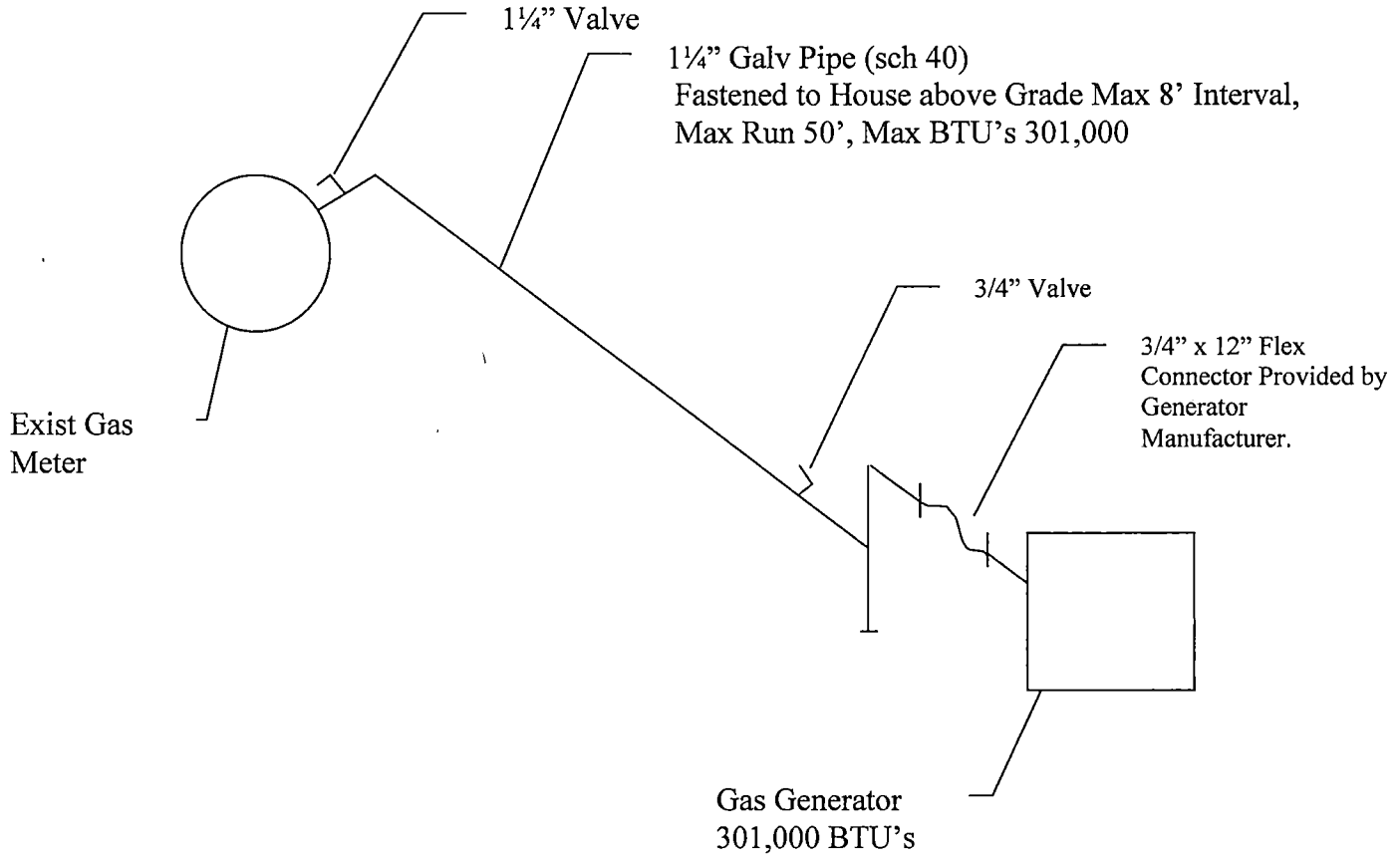

PLUMBING
APR 21 2020
APPROVED

JOB COPY

GAS ISOMETRIC DIAGRAM

Finnerty 681 Rolling Hills Ct. Brick, NJ 08724 Blk 1385.09 Lot 16 3/27/2020	Corbin Electrical Services, Inc. 35 Vanderburg Rd Marlboro, NJ 07746 732-536-0444 (f)732-536-8547 License #19HC00070800

YAOOC

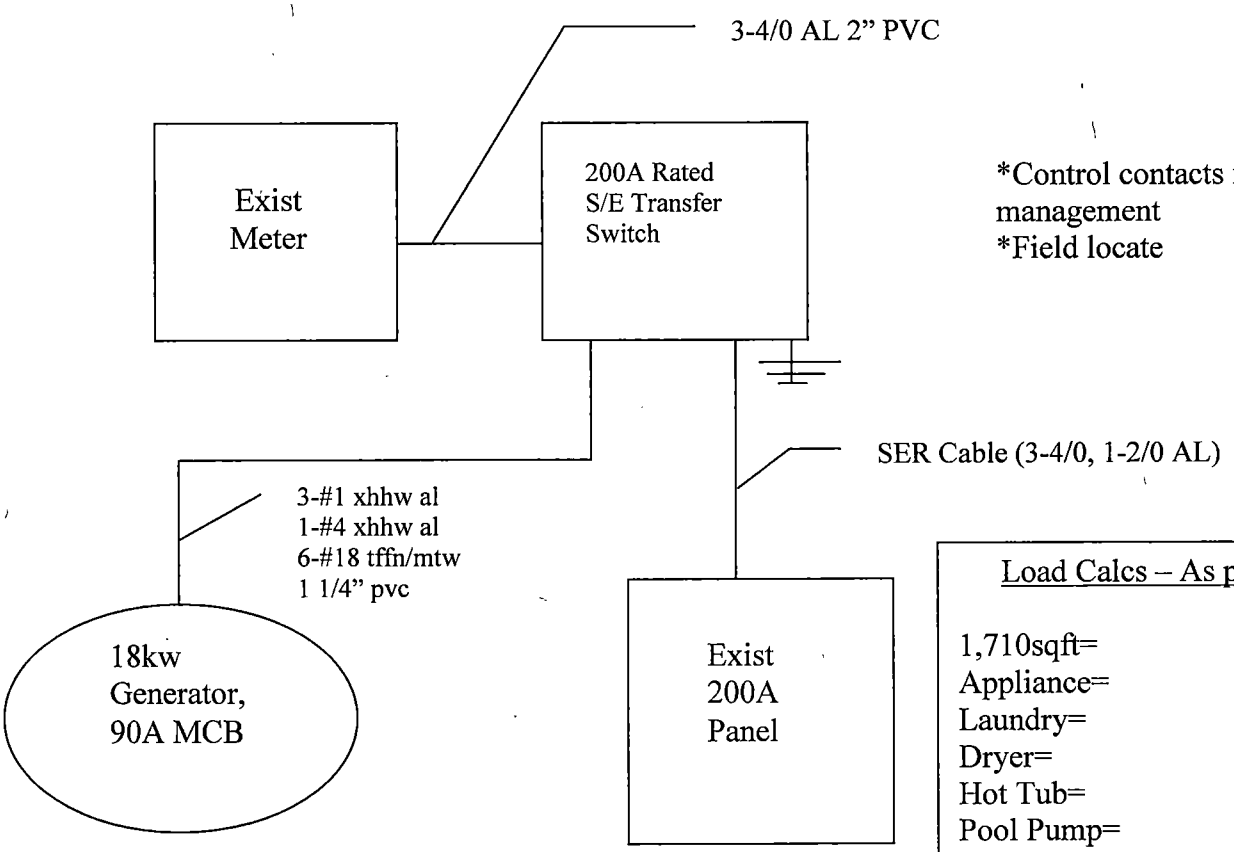

JOB COPY

GENERATOR ONE-LINE DIAGRAM

TOWNSHIP OF BRICK

RELEASED FOR PERMIT INITIAL DATE

Building Subcode_____

Plumbing Subcode_____

Fire Subcode_____

Electrical Subcode 4-20-2020 _____

Plan Reviewer_____

Plans Released_____

Construction Official_____

Load Calcs – As per 220.82

1,710sqft=	5,130VA
Appliance=	3,000VA
Laundry=	1,500VA
Dryer=	4,320VA
Hot Tub=	7,200VA
Pool Pump=	1,119VA
Furnace=	500VA
Micro=	1,000VA
Dishwasher=	1,200VA
Total	24,969VA

Demand

1st 10kVA=	10,000VA
Bal @ 40% gen=	5,988VA
Total=	15,988VA*

*A/C & oven have been omitted due to load shed capability of generator

Finnerty
681 Rolling Hills Ct.
Brick, NJ 08724
Blk 1385.09 Lot 16
3/27/2020

Corbin Electrical Services, Inc.
35 Vanderburg Rd
Marlboro, NJ 07746
732-536-0444 (f)732-536-8547
License #6419

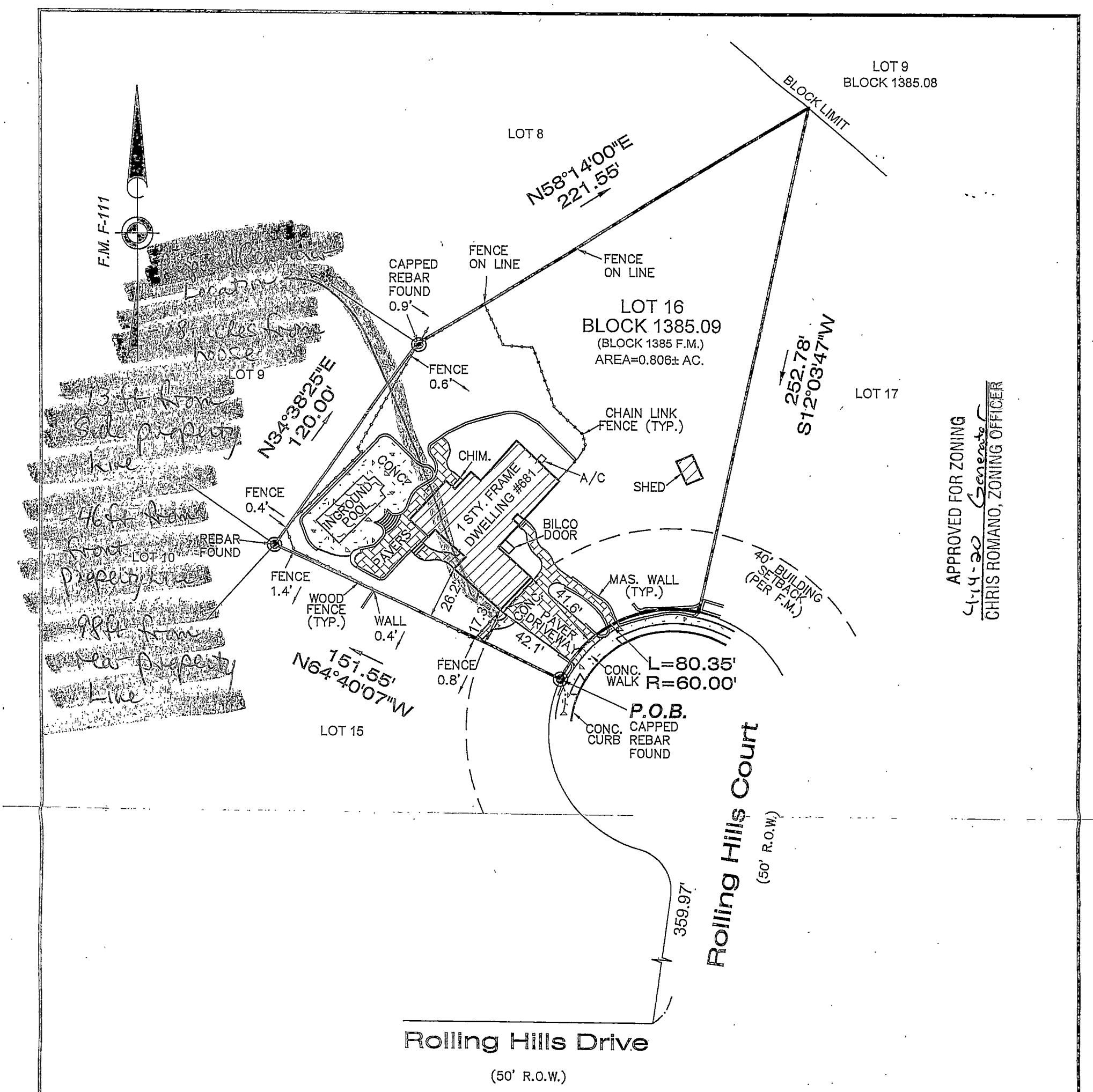

PREPARED FOR: *DAVID A. FINNERTY*

TITLE INSURER: *TWO RIVERS TITLE COMPANY, LLC (TRT12214)*
OLD REPUBLIC NATIONAL TITLE INSURANCE COMPANY

MORTGAGE HOLDER: *ADVISORS MORTGAGE GROUP, LLC,*
its successors and/or assigns, as their interest may appear.

CLOSING ATTORNEY: *F. BRADFORD BATCHA, Esquire*
BATCHA & BATCHA, LLC

Filed Map Reference:	Filed Map Block:	Filed Map Lot:	Filing Date:	Filed Map No.
FINAL RECORD PLAT OF ROLLING HILLS SECT. 1 & 2	1385	16	8/21/1972	F-111

IMPORTANT NOTES, PLEASE REVIEW:

- I DECLARE THAT, TO THE BEST OF MY PROFESSIONAL KNOWLEDGE AND BELIEF, THIS MAP OR PLAN MADE ON 8/9/18 BY ME OR UNDER MY DIRECT SUPERVISION IS IN ACCORDANCE WITH THE RULES AND REGULATIONS PROMULGATED BY THE STATE BOARD OF PROFESSIONAL ENGINEERS AND LAND SURVEYORS.
- THIS SURVEY DOES NOT PURPORT TO IDENTIFY BELOW GROUND ENCROACHMENTS, UTILITIES, SERVICES LINES OR STRUCTURES, WETLANDS, OR RIPARIAN RIGHTS. NO ATTEMPT WAS MADE TO DETERMINE IF ANY PORTION OF THE PROPERTY IS CLAIMED BY THE STATE OF NEW JERSEY AS TIDELANDS. ENVIRONMENTALLY SENSITIVE AREAS, IF ANY ARE NOT LOCATED BY THIS SURVEY.
- OFFSET DIMENSIONS FROM STRUCTURES TO PROPERTY LINES SHOWN HEREON ARE NOT TO BE USED TO REESTABLISH PROPERTY LINES.
- THIS SURVEY IS SUBJECT TO CONDITIONS WHICH AN ACCURATE TITLE SEARCH MIGHT DISCLOSE, SUBJECT TO RESTRICTIONS AND EASEMENTS RECORDED AND/OR UNRECORDED.
- BUILDING SETBACKS SHOWN HEREON ARE FROM RECORDED DEEDS AND FILED MAPS AND MAY NOT REFLECT CURRENT ZONING REQUIREMENTS.
- PROPERTY CORNERS HAVE NOT BEEN SET AS PER CONTRACTUAL AGREEMENT. (N.J.A.C. 13:40-5.1(D))

DB 10034 PG 1325

CERTIFICATE OF AUTHORIZATION: 24GA28229800

MORGAN
engineering & surveying

P.O. BOX 5232
TOMS RIVER, N.J. 08754
TEL: 732-270-9690
FAX: 732-270-9691
www.morganengineeringllc.com

DAVID J. VON STEENBURG
PROFESSIONAL LAND SURVEYOR
N.J. LIC. No. 34500

SURVEY OF PROPERTY

LOT 16 BLOCK 1385.09

TOWNSHIP OF BRICK

COUNTY OF OCEAN NEW JERSEY

Scale:	Drawn By:	Date:	JOB #.	CAD File #	Sheet #
1"=50'	RICH	8/9/18	18-07649	18-07649	1 OF 1