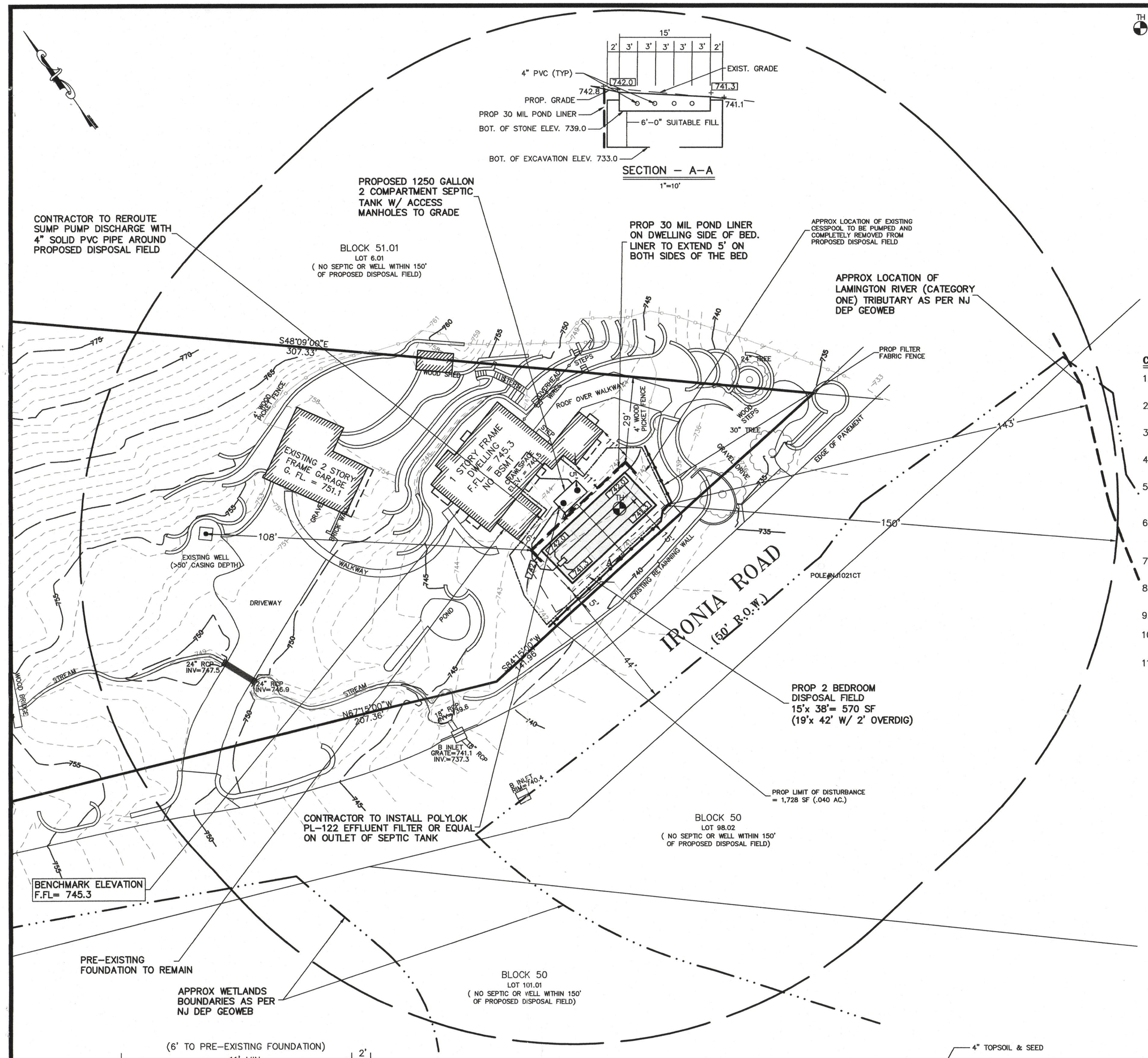

SECTION – A–A
1"=10'

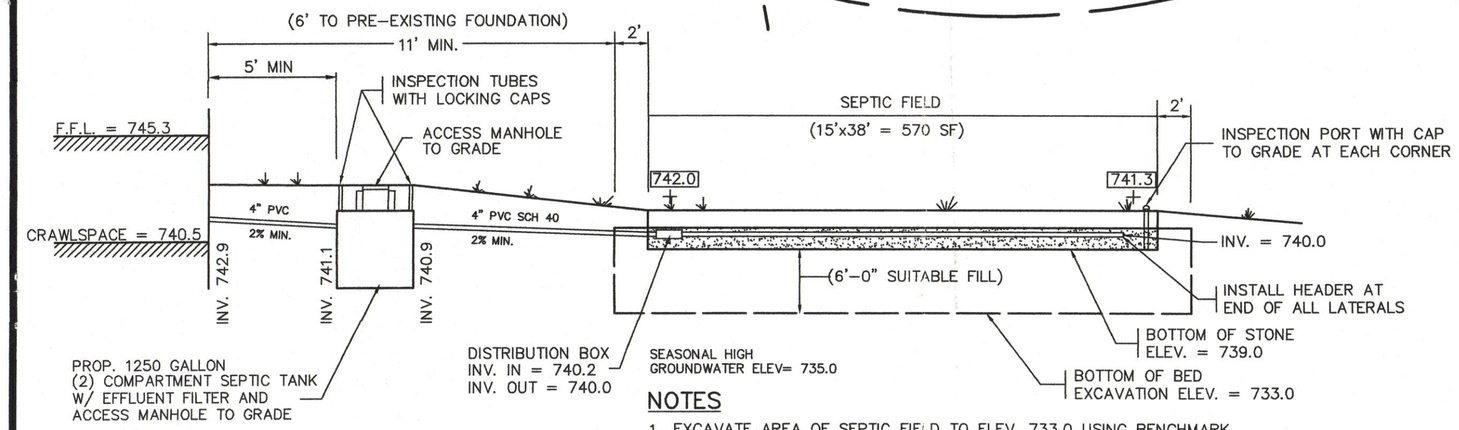

PROFILE – SEPTIC SYSTEM

NOTES

1. EXCAVATE AREA OF SEPTIC FIELD TO ELEV. 733.0 USING BENCHMARK (F.FL.) AND BACKFILL TO THE BOTTOM OF STONE, ELEV. 739.0 WITH SUITABLE FILL MATERIAL MEETING CURRENT N.J.D.E.P STANDARDS.

SUITABLE FILL REQUIREMENTS WITHIN THE ZONE OF TREATMENT:
1) COARSE FRAGMENTS (GREATER THAN NO. 8 SIEVE) <15% BY VOLUME OR <20% BY WEIGHT
2) TEXTURAL ANALYSIS: BETWEEN 80%-100% MUST PASS THROUGH NO. 8 SIEVE; BETWEEN 50%-85% MUST PASS THROUGH A NO. 16 SIEVE; BETWEEN 25%-60% MUST PASS THROUGH A NO. 30 SIEVE; BETWEEN 10%-30% MUST PASS THROUGH A NO. 50 SIEVE AND BETWEEN 2%-10% MUST PASS THROUGH A NO. 100 SIEVE
3) PERMEABILITY 6-20 IN/HR

SUITABLE FILL REQUIREMENTS WITHIN THE ZONE OF DISPOSAL:
1) COARSE FRAGMENTS (GREATER THAN NO. 8 SIEVE) <15% BY VOLUME OR <25% BY WEIGHT
2) TEXTURAL ANALYSIS: 85% OR MORE SAND
3) PERMEABILITY GREATER THAN 2" PER HOUR; OR PERCOLATION RATE FASTER THAN 30 MINUTES PER INCH

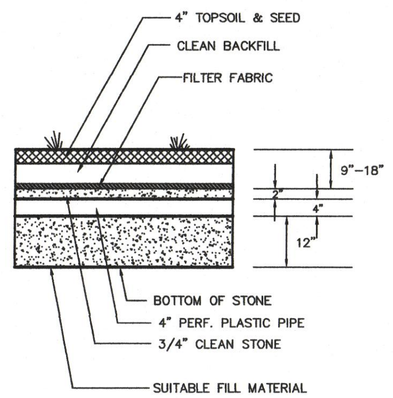

SECTION – SEPTIC BED

SOIL LOG & TEST RESULTS

TAKEN BY MAP ENGINEERING
TESTHOLE #1 (08-06-2015) WITNESSED BY KURT BOCKBRADER
0" – 76" FILL
76" – 80" ORIGINAL TOPSOIL
80" – 120" 10 YR 4/6 SANDY LOAM, SUBANGULAR BLOCKY, FRIABLE
5% GRAVEL, 5% COBBLE, 0% STONE
SOIL SAMPLE TAKEN AT 84"
SOIL PERMEABILITY RATING: K-3 (2-6 IN/HR)
MOTTLING AT 84"
NO GROUND WATER

SEPTIC SYSTEM DESIGN

1. NUMBER OF BEDROOMS : 2 EXISTING
2. SEPTIC TANK CAPACITY = 2(250 GAL/BEDROOM) = 500 GAL.
   PROPOSED 1250 GALLON (2) COMPARTMENT SEPTIC TANK
3. DESIGN FLOW: 200 GAL/DAY + 1(150 GAL/DAY) = 350 GPD
4. SOIL SUITABILITY CLASS : III Wr
5. DESIGN PERMEABILITY RATING : K-4 (6-20 IN/HR)
   (BASED ON 4' SOIL REPLACEMENT)
6. MIN. REQUIRED DISPOSAL FIELD BOT/GAL/DAY = 1.61 SF/GPD
   MIN. BED SIZE REQUIRED : 1.61 x 350 = 564 SF
7. SEPTIC BED PROVIDED : 15' x 38' = 570 SF
   (19' x 42' W/ 2' OVERDIG)

CONSTRUCTION NOTES

1. IF WORK IS REQUIRED TO THE SEWER LINE, THE BUILDING DEPARTMENT MUST BE CONTACTED AND A PERMIT REQUIRED IF NEEDED.
2. CONTRACTOR TO REGRADE AREA OF DISPOSAL FIELD TO A SLOPE OF 10% OR LESS PRIOR TO BEGINNING CONSTRUCTION
3. CONTRACTOR IS TO OBTAIN SEWER LINE INSPECTION FROM THE PLUMBING INSPECTOR PRIOR TO BACKFILLING SEPTIC SYSTEM
4. A LICENSED ENGINEER SHALL STAKE THE PROPOSED DISPOSAL FIELD PRIOR TO WORK BEGINNING.
5. THERE IS TO BE NO USE OF 90 DEGREE ELBOWS AT ANY BEND POINT ON THE DELIVERY LINE OR IN THE PROPOSED DISPOSAL BED. ALL BEND POINTS TO BE MANUFACTURED FROM 45 DEGREE FITTING.
6. CONTRACTOR IS TO ENSURE THAT ALL PIPES USED TO BUILD THE SEPTIC SYSTEM ARE TO HAVE THE CORRECT PITCH WHICH IS GOVERNED BY THE NJ STATE SEPTIC CODE. (2% MAX SLOPE)
7. CONTRACTOR IS TO INSTALL 4" PVC INSPECTIONS PORTS AT ALL 4 CORNERS OF THE PROPOSED DISPOSAL FIELD.
8. CONTRACTOR TO INSTALL FILTER FABRIC FENCING ON DOWNHILL SIDE OF PROPOSED DISPOSAL FIELD.
9. CONTRACTOR IS TO USE SUITABLE FILL ONLY.
10. CONTRACTOR IS TO PROVIDED A "ONE CALL NUMBER" TO THE TOWNSHIP HEALTH INSPECTOR PRIOR TO THE OPEN BED INSPECTION.
11. CONTRACTOR TO INSTALL 12" OF SAND BACKFILL OVER THE ENTIRE LENGTH OF THE CONNECTING PIPE.

SEPTIC TANK NOTES:

1. ALL JOINTS BELOW THE LIQUID LEVEL OF THE TANK OR BELOW THE SEASONALLY HIGH WATER TABLE SHALL BE PROVIDED WITH A PERMANENT WATER-TIGHT SEAL.
2. ALL INSIDE CONCRETE SURFACES SHALL BE SEALED WITH TWO COATINGS OF AN APPROPRIATE INERT COATING TO MINIMIZE CORROSION. COATING OF PRE-CAST TANKS SHALL BE APPLIED BY THE MANUFACTURER PRIOR TO DELIVERY TO THE JOB SITE.
3. A SEPTIC SOLIDS RETAINER OR SEPTIC EFFLUENT FILTER SHALL BE INSTALLED AND MAINTAINED IN CONJUNCTION WITH ALL NEW SEPTIC TANKS PRIOR TO THE EFFLUENT DISTRIBUTION NETWORK.
4. ALL MANHOLES SHALL BE EXTENDED TO AND MAINTAINED AT FINISHED GRADE BY MEANS OF A RISER FITTED WITH A REMOVABLE WATERTIGHT COVER. COVERS SHALL BE BOLTED OR LOCKED TO PREVENT ACCESS BY CHILDREN AND SHALL BE OF CAST IRON WHEN A CONCRETE RISER IS USED.
5. A PERMANENT, NON-CORROSIVE MARKER A MINIMUM OF SIX (6) SQUARE INCHES IN SIZE CONTAINING THE FOLLOWING INFORMATION SHALL BE ATTACHED TO THE MANHOLE COVER OR RISER IMMEDIATELY BELOW THE COVER:
   a. THE ADMINISTRATIVE AUTHORITY NAME AND PERMIT NUMBER UNDER WHICH THE SYSTEM WAS INSTALLED
   b. THE DATE OF INSTALLATION
   c. THE TYPE OF SYSTEM
   d. THE TOTAL DESIGN CRITERIA IN GALLONS PER DAY
6. MANHOLE RISERS AND INSPECTION PORTS ON FIBERGLASS OR POLYETHYLENE TANKS SHALL BE CONSTRUCTED OF THE SAME MATERIAL AS THE TANK.
7. ALL TANKS INCLUDING RISERS AND INSPECTION PORTS TO THE HIGHEST JOINT, SHALL BE TESTED FOR WATER TIGHTNESS AFTER INSTALLATION AND BEFORE BACKFILLING USING HYDROSTATIC OR VACUUM TESTS IN ACCORDANCE WITH THE FOLLOWING:
   a. WATER TIGHTNESS TESTING PROCEDURES AND CRITERIA FOR CONCRETE TANKS SHALL FOLLOW THE METHODS DESCRIBED IN ASTM C-1227 OR THE NPCA TESTING CRITERIA AND PROCEDURES SPECIFIED IN ITS PRECAST CONCRETE ON-SITE WASTEWATER TANK BEST PRACTICES MANUAL
   b. TANKS MADE OF MATERIAL OTHER THAN CONCRETE SHALL BE TESTED, AFTER INSTALLATION, IN ACCORDANCE WITH THE METHODS DESCRIBED IN ASTM C-1227 STANDARDS, IF APPLICABLE, OR OTHER HYDROSTATIC OR VACUUM METHODS APPROVED BY THE TANK MANUFACTURER
   c. WATER USED FOR THE TESTING SHALL BE EITHER FROM A POTABLE WATER SOURCE OR RECLAIMED WATER FOR BENEFICIAL REUSE AUTHORIZED BY AN NJPDES PERMIT.
   d. THE USE OF AN ONSITE POTABLE WELL FOR PURPOSES OF SUPPLYING WATER FOR THIS TEST IS NOT RECOMMENDED.
   e. IF AN ONSITE POTABLE WELL IS TO BE USED, WITHDRAWAL OF WATER FROM THE WELL SHALL BE AT A RATE OF LESS THAN 50 PERCENT OF THE DESIGN YIELD OF THE WELL AND IN A MANNER THAT WILL AVOID DAMAGE TO THE PUMP OR ANY OTHER PART OF THE WELL.
8. POLYLOK FILTER PL-122, OR APPROVED NSF 46 EQUAL. FILTER IS EQUIPPED WITH A GAS DEFLECTOR. IN ABSENCE OF FILTER, A GAS DEFLECTOR IS TO BE INSTALLED IN OUTLET SIDE OF TANK.

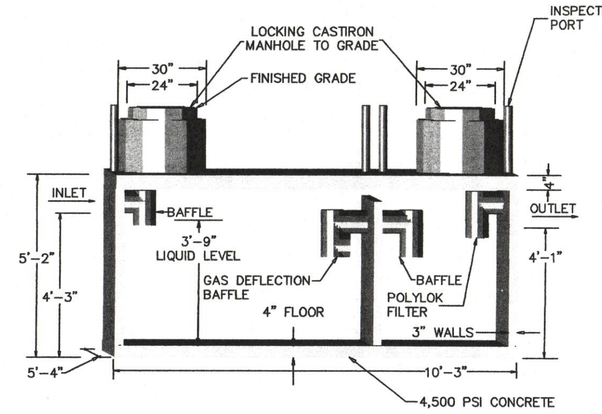

1250 GALLON RECTANGULAR 2 COMPARTMENT SEPTIC TANK

POLYLOK FILTER PL-122, OR APPROVED NSF 46 EQUAL. FILTER IS EQUIPPED WITH A GAS DEFLECTOR. IN ABSENCE OF FILTER, A GAS DEFLECTOR IS TO BE INSTALLED IN OUTLET SIDE OF TANK.

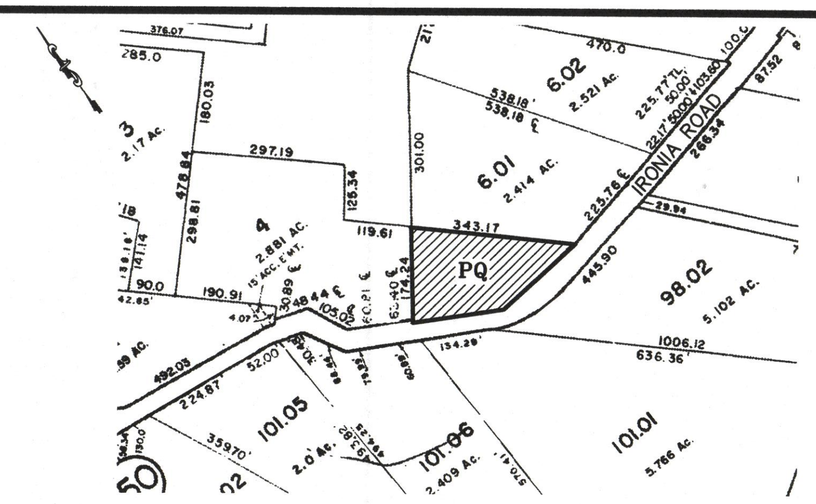

KEY MAP
1" = 200'

GENERAL NOTES

1. PROPERTY LINE AND TOPOGRAPHIC INFORMATION FROM A SURVEY BY DAB SURVEYING INC., DOUGLAS B. SMITH, NJPLS LIC #43234 DATED JULY 28, 2015.
2. PROPERTY KNOWN AS #5 IRONIA ROAD OR AS LOT 5 IN BLOCK 51.01 ON THE CURRENT TAX MAP OF THE TOWNSHIP OF CHESTER
3. OWNER / APPLICANT: LESLIE BROWN
   5 IRONIA ROAD
   FLANDERS, N.J. 07836
4. TOPOGRAPHY BASED ON NAVD 1988
5. THE SITE CONTRACTOR IS RESPONSIBLE FOR LOCATING ALL UNDERGROUND UTILITIES. THE DESIGN ENGINEER SHALL BE NOTED OF ANY CONFLICTS PRIOR TO THE BEGINNING OF CONSTRUCTION.
6. THE DESIGN ENGINEER SHALL BE NOTED A MINIMUM OF 24 HOURS IN ADVANCE OF THE FOLLOWING SO THAT THE REQUIRED INSPECTIONS AND CERTIFICATIONS CAN BE PROVIDED:
   1) SEPTIC FIELD OPEN BED INSPECTION
   2) SUITABLE FILL INSTALLATION
   3) SEPTIC TANK AND FIELD LATERAL INSTALLATION
   4) BACK FILLING OF THE SEPTIC SYSTEM
7. ALL TREES WITHIN 10' OF PROPOSED DISPOSAL FIELD TO BE REMOVED
8. CONTRACTOR TO CONFIRM THAT ALL EXISTING PLUMBING FIXTURES IN THE DWELLING ARE CONNECTED TO PROPOSED SEPTIC TANK.
9. DEVIATIONS FROM STANDARDS
   1) SEPARATION DISTANCE: DISPOSAL FIELD TO PROPERTY LINE
      EXISTING CESSPOOL: 15'/20' = 75% CONFORMANCE
      PROPOSED: 5'/10' = 50% CONFORMANCE
   2) SEPARATION DISTANCE: DISPOSAL FIELD TO OCCUPIED BUILDING
      EXISTING CESSPOOL: 11'/50' = 22% CONFORMANCE
      PROPOSED: 11'/25' = 44% CONFORMANCE
      (6' TO PRE-EXISTING FOUNDATION)
   3) SEPARATION DISTANCE: SEPTIC TANK TO OCCUPIED BUILDING
      EXISTING: N/A
      PROPOSED: 5'/10' = 50% CONFORMANCE
   4) ONE SOIL LOG/TWO REQUIRED DUE TO SITE CONDITIONS
10. A GENERAL PERMIT #25 IS REQUIRED FOR CONSTRUCTION OF A SEPTIC ALTERATION IN A FRESHWATER WETLANDS TRANSITION AREA.
11. A PERMIT BY RULE APPROVAL FROM NJDEP FLOOD HAZARD REGULATIONS IS REQUIRED FOR CONSTRUCTION IN A DISTURBED RIPARIAN BUFFER.

ALL COMPONENTS OF THE EXISTING SEPTIC FIELD AND THE SURROUNDING CONTAMINATED SOILS ARE TO BE REMOVED FROM THE AREA OF THE PROPOSED SEPTIC FIELD. THIS MAY REQUIRE EXCAVATION BELOW THE SPECIFIED ELEVATION OF 733.0 ANY ADDITIONAL EXCAVATION SHALL BE BACKFILLED WITH SUITABLE FILL MATERIAL TO A MAXIMUM DEPTH OF 8' BELOW THE BOTTOM OF STONE ELEV. 739.0 THE REMAINING DEPTH OF EXCAVATION MAY BE BACKFILLED WITH NATIVE SOILS.

CHESTER TOWNSHIP
BOARD OF HEALTH
APPROVED
R.E.H.S.
DATED 9/23/15

RECEIVED
SEP 14 2015
CHESTER TOWNSHIP
BOARD OF HEALTH

MORRIS COUNTY SOIL MAP (NRCS/USDA)
CooBC – COKESBURY LOAM

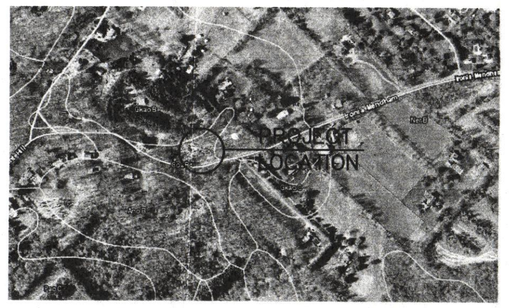

SUITABLE FILL COMPACTION STANDARDS

1. FILL MATERIAL SHALL BE SPREAD AND COMPACTED IN LAYERS OF ONE FOOT OR LESS.
2. COMPACTION MAY BE ACCOMPLISHED MANUALLY OR MECHANICALLY, BY TAMPING OR ROLLING, OR BY DRIVING OVER THE FILLED AREA IN A CONTROLLED PATTERN USING TRACKED OR RUBBER-TIRED VEHICLES. COMPACTION MAY ALSO BE ACCOMPLISHED BY PUDDLING.
3. WHEN HEAVY EXCAVATING EQUIPMENT IS OPERATED WITHIN THE EXCAVATION FOR THE PURPOSE OF PLACEMENT OF COMPACTION OF THE FILL MATERIAL, THIS EQUIPMENT SHALL NOT BE DRIVEN DIRECTLY ON THE EXPOSED BOTTOM OF THE EXCAVATION. A MINIMUM OF ONE FOOT OF FILL MATERIAL SHALL BE MAINTAINED BELOW THE VEHICLE TRACKS OR WHEELS AT ALL TIMES.

*EXCAVATION INSPECTION REQUIRED
*FINAL INSPECTION REQUIRED
*ENGINEER MUST INSPECT LOCATION
*ENGINEER MUST INSPECT AND CERTIFY INSTALLATION OF THE SEPTIC SYSTEM

* No additions or new structures can be built with 15' of bed

LEGEND:
EXISTING CONTOUR — 104
PROPOSED CONTOUR — 112
EXISTING GRADE — +101.9
PROPOSED GRADE — +114.0

REVISIONS		
DATE	BY	DESCRIPTIONS
09/04/15	JH	2. HEALTH DEPARTMENT COMMENTS
08/20/15	JH	1. OWNER'S NAME

DRAWN BY	CHECKED BY
JH	MAP

SEPTIC ALTERATION
BLOCK 51.01 – LOT 5
#5 IRONIA ROAD
FOR
LESLIE BROWN
TOWNSHIP OF CHESTER, MORRIS CO., N.J.

MAP ENGINEERING, INC.
170 Kinnelon Road
Suite 36
Kinnelon, NJ 07405
P:(973)492-0345
F:(973)492-6472
Staff@MAPengineering.net
www.MAPengineering.net

DATE 08/12/2015
MARK A. PALUS, P.E., P.P.
N.J. PROFESSIONAL ENGINEER LICENSE NO. 40354
N.J. CERTIFICATE OF AUTHORIZATION NO. 27912100

JOB NO: 2292-1893
SHEET NO: 1 OF 2

DRAWING SCALE
1" = 20'
0 20' 40'
GRAPHIC SCALE