SEWER LINES/DISTRIBUTION LINES

1. MINIMUM SLOPE OF SEWER LINE TO BE 1/4" PER FOOT.
2. A. SLOPE OF PIPE IN DISPOSAL BED TO BE 0"–2"/100 FEET.
   B. PERFORATED PVC PIPE TO BE IN ACCORDANCE WITH ASTM–D2729.
   C. CAP ENDS OF DISTRIBUTION PIPES.
   D. MANIFOLD LINES FROM DISTRIBUTION BOX TO LATERALS TO BE SOLID PVC.
3. BUILDING SEWER PIPE TO BE 4" SCHEDULE 40 PVC PIPE INSTALLED WITH 10" OF SAND ALL AROUND.
4. 4" PERFORATED PVC INSPECTION PORTS WITH THREADED CAPS TO BE SET IN THE ENDS OF THE DISTRIBUTION SYSTEM. (USE SOLID PVC PIPE ABOVE GRAVEL)

SEPTIC TANKS, PUMP PITS AND DISTRIBUTION BOXES

1. CERTIFICATION FOR FROST RESISTANCE (ACI 318–16–4.5.1) AND WATER TIGHTNESS (ACI 318–16–4.5.2 SHALL BE PROVIDED BY THE MANUFACTURER AND THE CERTIFICATION DISPLAYED ON THE TANK.
2. ALL INSIDE CONCRETE SURFACES SHALL BE SEALED WITH TWO COATINGS OF AN APPROPRIATE INERT COATING TO MINIMIZE CORROSION (COAL TAR PITCH). COATING OF PRE–CAST TANKS SHALL BE APPLIED BY THE MANUFACTURER PRIOR TO DELIVERY TO THE JOB SITE. DISTRIBUTION BOX MUST ALSO BE COATED.
3. ALL OPENINGS IN SEPTIC TANK TO BE SEALED WITH EMBECO 636 GROUT OR EQUIVALENT AND COVERED ON OUTSIDE WITH TAR.
4. WHEN USING CYLINDRICAL TANKS PROVIDE A MINIMUM INSIDE LENGTH OF 72 INCHES MEASURED BETWEEN THE INLET SIDE TO THE OUTLET SIDE AND A MINIMUM WIDTH AT THE LIQUID LEVEL OF 36 INCHES.
5. SEPTIC TANKS AND/OR PUMP PIT SHALL BE PLACED UPON A FIRM AND STABLE FOUNDATION SO THAT THE POTENTIAL FOR UNEVEN SETTLEMENT OR SHIFTING IS MINIMIZED. TANKS ARE TO BE INSTALLED DIRECTLY ON UNDISTURBED NATURAL SOIL. IF THE EXCAVATION IS DUG TOO DEEP, IT SHALL BE BACKFILLED TO THE PROPER ELEVATION WITH COMPACT SAND. COMPACTED SAND TO BE OBSERVED BY DESIGN ENGINEER PRIOR TO INSTALLATION OF THE TANK.
6. BACKFILL SHALL BE OF EARTH SIMILAR TO THAT FOUND AT THE SITE AND SHALL BE FREE OF LARGE STONES, BROKEN MASONRY, STUMPS, AND OTHER WASTE MATERIALS. BERM MATERIAL TO BE CLAY RICH, COMPACTED IN SIX (6) TO TWELVE (12) INCH LIFTS.
7. TANK INVERT CONNECTIONS TO BE SEALED WITH AN EXPANDING GROUT OR A MANUFACTURED WATER–PROOF PIPE COUPLING WHICH IS INCORPORATED INTO THE WALL OF THE TANK.
8. ALL MANHOLES SHALL BE EXTENDED AND MAINTAINED AT FINISHED GRADE BY MEANS OF A RISER FITTED WITH FINISHED GRADE BY MEANS OF A RISER FITTED WITH A REMOVABLE, WATERTIGHT COVER. COVERS SHALL BE BOLTED OR LOCKED TO PREVENT ACCESS BY CHILDREN AND SHALL BE CAST IRON WHEN A CONCRETE RISER IS USED. THE MANHOLE COVER SHALL BE OF A MATERIAL THAT WILL ENSURE A WATER TIGHT SEAL BETWEEN THE COVER AND RISER AT ALL TIMES AS SPECIFIED BY THE SEPTIC SYSTEM DESIGNER AND ADMINSTRATIVE AUTHORITY.
9. THE SEPTIC TANK(S) INSTALLATION SHALL BE SUCH THAT THE HIGH SEASONAL WATER TABLE SHALL BE NO HIGHER THAN ONE (1') FOOT BELOW THE OUTLET OR ANY JOINTS OF THE SEPTIC TANK.
10. THE INSTALLATION OF ALL SEPTIC TANKS SHALL PREVENT FLOTATION.
11. A SEPTIC EFFLUENT FILTER SHALL BE INSTALLED AND MAINTAINED IN CONJUNCTION WITH ALL SEPTIC TANKS PRIOR TO THE EFFLUENT DISTRIBUTION NETWORK AND IN ACCORDANCE WITH ALL MANUFACTURER'S SPECIFICATIONS. SEPTIC EFFLUENT FILTERS SHALL BE CERTIFIED BY, AND BEAR THE MARK OF NSF INTERNATIONAL (NSF) UNDER NSF STANDARD 46.
12. A PERMANENT NON–CORROSIVE MARKER A MINIMUM OF SIX (6) INCHES IN SIZE CONTAINING THE FOLLOWING INFORMATION SHALL BE ATTACHED TO THE MANHOLE COVER OR RISER IMMEDIATELY BELOW THE COVER:
    A. THE ADMINSTRATIVE AUTHORITY NAME AND PERMIT NUMBER UNDER WHICH THE SYSTEM WAS INSTALLED;
    B. THE DATE OF INSTALLATION;
    C. THE TYPE OF SYSTEM;
    D. THE TOTAL DESIGN CRITERIA IN GALLONS PER DAY.
13. AN INSPECTION PORT EXTENDING TO FINISHED GRADE SHALL BE PROVIDED OVER EACH TANK OR COMPARTMENT INLET WHICH IS NOT DIRECTLY BELOW A MANHOLE. INSPECTION PORTS SHALL EXTEND TO FINISHED GRADE AND SHALL BE CONSTRUCTED OF 4" PVC PIPE WITH A LOCKED OR BOLTED CAP. OUTLETS OVER THE SEPTIC SOLIDS RETAINER OR EFFLUENT FILTER SHALL BE LOCATED DIRECTLY BELOW A MANHOLE OR HAVE AN INSPECTION PORT THAT ALLOWS FOR AT GRADE ACCESS TO THE DEVICE TO ALLOW UNIMPEDED MAINTENANCE WITHOUT ENTERING THE SEPTIC TANK.
14. ALL TANKS, INCLUDING RISERS AND INSPECTION PORTS TO THE HIGHEST JOINT, SHALL BE TESTED FOR WATER TIGHTNESS AFTER INSTALLATION AND BEFORE BACKFILLING USING HYDROSTATIC OR VACUUM TESTS IN ACCORDANCE WITH THE FOLLOWING:
    A. WATER TIGHTNESS TESTING PROCEDURES AND CRITERIA FOR CONCRETE TANKS SHALL FOLLOW THE METHODS DESCRIBED IN AMERICAN STANDARD TESTING METHOD (ASTM) C–1227 STANDARDS INCORPORATED BY REFERENCE, AS AMENDED, OR THE NATIONAL PRE–CAST CONCRETE ASSOCIATION (NPCA) TESTING CRITERIA AND PROCEDURES SPECIFIED IN ITS PRE–CAST CONCRETE ON–SITE WASTEWATER TANK BEST PRACTICES MANUAL INCORPORATED BY REFERENCE, AS AMENDED. THE ASTM METHODS CAN BE OBTAINED AT: HTTP://WWW.ASTM.ORG/STANDARD/INDEX.SHTML AND THE NPCA METHODS MAY BE OBTAINED AT: HTTP://WWW.ASTM.ORG/TECHNICAL–SERVICES–OVERVIEW.
    B. TANKS MADE OF MATERIAL OTHER THAN CONCRETE SHALL BE TESTED, AFTER INSTALLATION, IN ACCORDANCE WITH THE METHODS DESCRIBED IN ASTM C–1227 STANDARDS, IF APPLICABLE, OR OTHER HYDROSTATIC OR VACUUM TESTING METHODS APPROVED BY THE TANK MANUFACTURER.
    C. WATER USED FOR THIS TESTING SHALL BE EITHER FROM A POTABLE WATER SOURCE OR RECLAIMED WATER FOR BENEFICAL REUSE AUTHORIZED BY AN NJPDES PERMIT.
    D. IF AN ONSITE POTABLE WELL IS TO BE USED, WITHDRAWAL OF WATER FROM THE WELL SHALL BE AT A RATE OF LESS THAN 50% OF THE DESIGN YIELD OF THE WELL AND IN A MANNER THAT WILL AVOID DAMAGE TO THE PUMP OR ANY OTHER PART OF THE WELL.

DISPOSAL FIELD NOTES

1. NO HEAVY MACHINERY (RUBBER TIRE) ALLOWED ON BED AREA DURING OR AFTER CONSTRUCTION.
2. CAUTION REQUIRED DURING CONSTRUCTION, SOIL SUBJECT TO SURFACE SMEARING. BEFORE PLACEMENT OF FILTER MATERIAL, ALL SIDEWALLS AND BOTTOM AREAS SHALL BE SCARIFIED. CONSTRUCTION SHALL NOT TAKE PLACE WHEN THE SOIL MOISTURE CONTENT IS ABOVE THE LOWER PLASTIC LIMIT.
3. THE FILL MATERIAL USED BELOW THE DISPOSAL FIELD SHALL MEET THE REQUIREMENTS FOR TEXTURE AND PERMEABILITY WHICH ARE PRESCRIBED IN 7:9A–10.1(F), AND:
    A. A MINIMUM OF TWO PERCOLATION TESTS SHALL BE CONDUCTED AT THE LEVEL OF INFILTRATION AFTER THE FILL MATERIAL HAS BEEN INSTALLED. THESE TESTS SHALL BE PERFORMED AND WITNESSED BY THE ENGINEER OR THE ENGINEER'S REPRESENTATIVE. IF DIFFERENT FILL MATERIALS ARE INSTALLED WITHIN THE ZONES OF TREATMENT AND DISPOSAL, SEPERATE TESTS (PERCOLATION AND TEXTURAL ANALYSIS) SHALL BE DONE FOR EACH RESPECTIVE ZONE.
    B. COMPACTION MAY BE ACCOMPLISHED MANUALLY OR MECHANICALLY, BY TAMPING OR BY DRIVING OVER THE FILLED AREA IN A CONTROLLED PATTERN USING TRACKED VEHICLES. COMPACTION MAY ALSO BE ACCOMPLISHED BY PUDDLING.
4. THE FILL MATERIAL IS UTILIZED WITHIN THE ZONE OF TREATMENT/DISPOSAL SHALL MEET THE FOLLOWING REQUIREMENTS:
    A. COARSE FRAGMENT CONTENT LESS THAN 15% BY VOLUME OR LESS THAN 20% BY WEIGHT;
    B. TEXTURAL ANALYSIS BETWEEN 80 AND 100 PERCENT MUST PASS A NO. 8 SIEVE(2.36MM); BETWEEN 50 AND 85 PER CENT MUST PASS A NO. 16 SIEVE(1.18 MM); BETWEEN 25 AND 60 PER CENT MUST PASS A NO. 30 SIEVE(0.6MM); BETWEEN 10 AND 30 PER CENT MUST PASS A NO. 50 SIEVE(0.3MM); AND BETWEEN TWO AND 10 PER CENT MUST PASS A NO. 100 SIEVE (0.15MM); AND
    C. PERMEABILITY FROM SIX (6) TO TWENTY (20) INCHES PER HOUR OR PERCOLATION RATE FROM THREE (3) TO TEN (10) MINUTES PER INCH.
5. FILTER MATERIAL SHALL BE WASHED GRAVEL, CRUSHED STONE, OR CLEAN BANK GRAVEL RANGING IN SIZE FROM 3/4" TO 2–1/2", FREE OF FINES, DUST, ASHES, AND CLAY; DOT NUMBER 3, 4, OR 24.
6. FOUR (4") INCH PERFORATED PVC PIPE SHALL HAVE TIGHT JOINTS AND BE LAID AT 2"/100 FOOT SLOPE. PERFORATIONS SHALL BE EVENLY SPACED ALONG TWO ROWS RUNNING THE LENGTH OF THE PIPE, ON EACH SIDE, MIDWAY BETWEEN THE INVERT AND THE CENTER LINE WHICH SEPARATES THE UPPER AND LOWER HALVES OF THE PIPE. THE ENDS OF ALL DISPOSAL LINES SHALL BE CAPPED.
7. MANIFOLD LINES FROM DISTRIBUTION BOX TO LATERALS TO BE SOLID PVC.
8. 4" PERFORATED PVC INSPECTION PORTS WITH THREADED CAPS TO BE SET IN THE ENDS OF THE DISPOSAL BED. USE SOLID PVC ABOVE GRAVEL.
9. FILTER MATERIAL SHALL BE COVERED WITH FILTER FABRIC (MARAFI # 140 OR EQUIVALENT). EDGES OF ADJACENT SHEETS OF FILTER FABRIC SHALL OVERLAP SIX (6) INCHES.

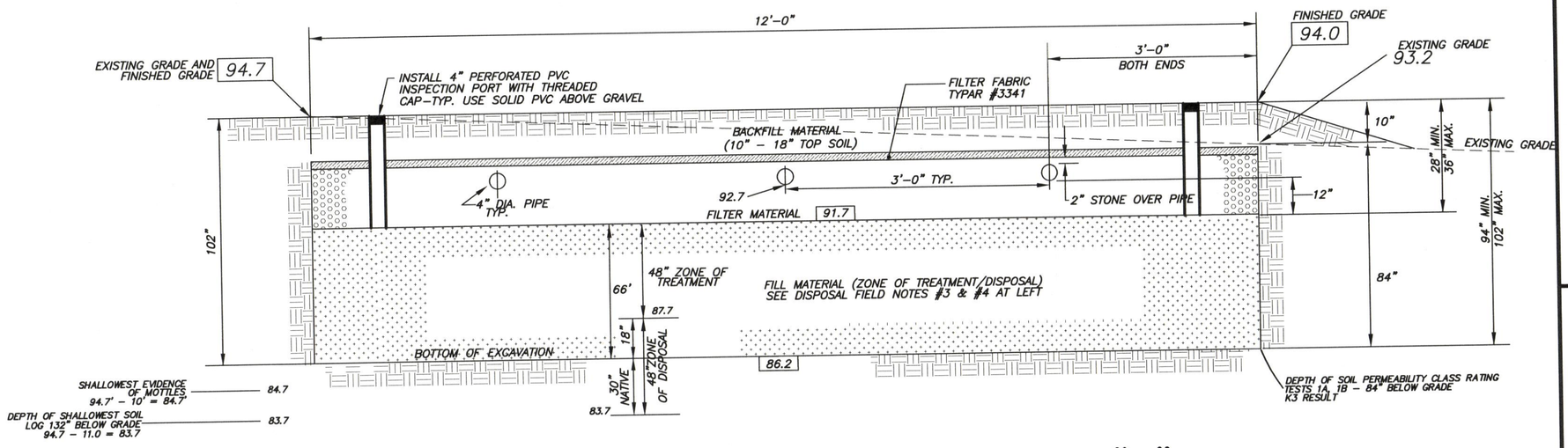

SECTION VIEW ~ DISPOSAL SYSTEM "A"

N.T.S.

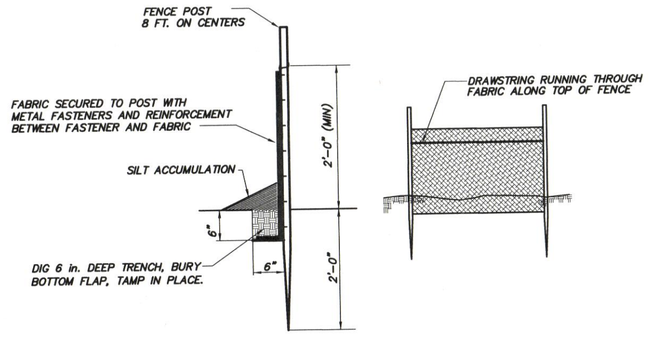

SILT FENCE DETAIL

NOT TO SCALE

REF.: STANDARDS FOR SOIL EROSION AND SEDIMENT CONTROL IN NEW JERSEY, PAGE 25–4.

REQUIREMENTS FOR SILT FENCE:

(1.) FENCE POSTS SHALL BE SPACED 8 FEET CENTER–TO–CENTER OR CLOSER. THEY SHALL EXTEND AT LEAST 2 FEET INTO THE GROUND AND EXTEND AT LEAST 2 FEET ABOVE GROUND. POSTS SHALL BE CONSTRUCTED OF HARDWOOD WITH A MINIMUM DIAMETER THICKNESS OF 1–1/2 INCHES.

(2.) A METAL FENCE WITH 6 INCH OR SMALLER OPENINGS AND AT LEAST 2 FEET HIGH MAY BE UTILIZED. IT MUST BE FASTENED TO THE FENCE POSTS TO PROVIDE REINFORCEMENT AND SUPPORT TO THE GEOTEXTILE FABRIC WHERE SPACE FOR OTHER PRACTICES IS LIMITED AND HEAVY SEDIMENT LOADING IS EXPECTED.

(3.) A GEOTEXTILE FABRIC, RECOMMENDED FOR SUCH USE BY THE MANUFACTURER, SHALL BE BURIED AT LEAST 6 INCHES DEEP IN THE GROUND. THE FABRIC SHALL EXTEND AT LEAST 2 FEET ABOVE THE GROUND. THE FABRIC MUST BE SECURELY FASTENED TO THE POSTS USING A SYSTEM CONSISTING OF METAL FASTENERS (NAILS OR STAPLES) AND A HIGH STRENGTH REINFORCEMENT MATERIAL (NYLON WEBBING, GROMMETS, WASHERS, ETC.). PLACED BETWEEN THE FASTENER AND THE GEOTEXTILE FABRIC. THE FASTENING SYSTEM SHALL RESIST TEARING AWAY FROM THE POST. THE FABRIC SHALL INCORPORATE A DRAWSTRING IN THE TOP PORTION OF THE FENCE.

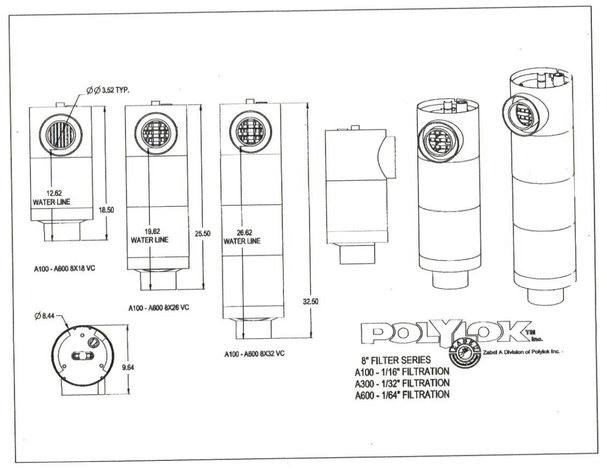

ZABEL FILTER

N.T.S.

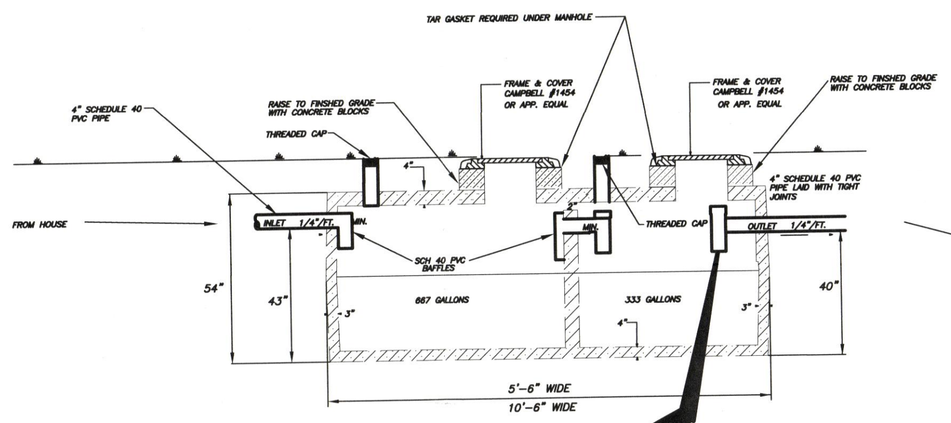

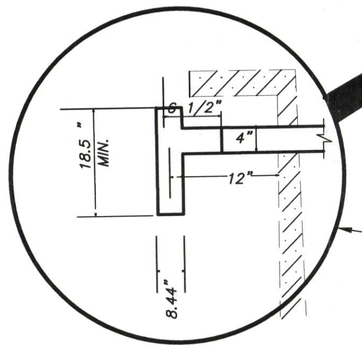

PROPOSED 1000 GALLON DOUBLE COMPARTMENT SEPTIC TANK

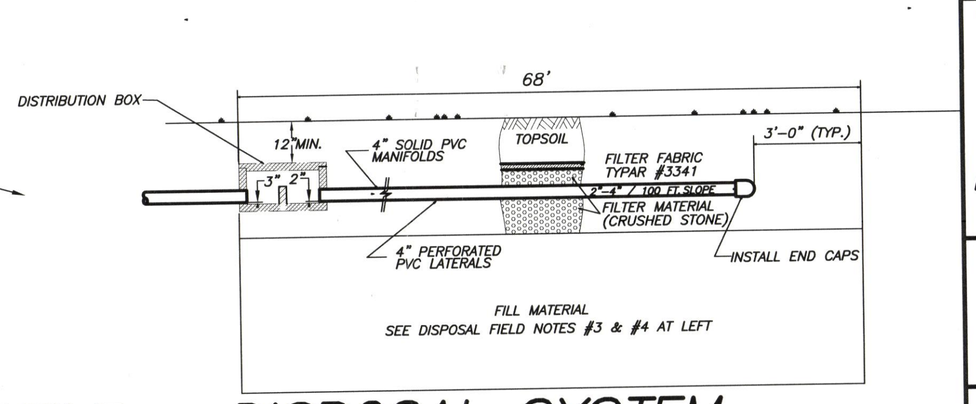

PROFILE – DISPOSAL SYSTEM

Civil Engineers
Land Surveyors &
Professional Planners

YANNACCONE VILLA & ALDRICH, LL

460 MAIN STREET, P.O. BOX 4
CHESTER, NEW JERSEY 0793
PHONE: 908–879–6646
FAX: 908–879–8591
N.J. STATE BOARD FOR P.E. & P.L.S. CERT OF AUTHORIZATION No. 24GA2793450

GREGORY E. YANNACCONE
N.J. PROFESSIONAL ENGINEER No.

NOT VALID WITHOUT SIGNATURE AND RAIS

NO.	DATE	REVISION

PROJECT TITLE :

ADEY PROPERTY

22 MOUNTAIN VIEW DRIV
LOT 9 ~ BLOCK 10.0
TOWNSHIP OF CHEST
MORRIS COUNTY, NEW J

SHEET TITLE :

SEPTIC DESIG DETAILS

DRAWN BY: GY	DATE: 3/21/16
CHECKED BY: GY	SCALE: AS SI

W.O. 216009

F.B. 766 115–118

FILE:

COMP FILE: M:\SEPTIC\DATA\216000\216009\dwg\sep

SHEET 2 OF 2