NEC 2011 Compliant (Grace Period)

BLOCK 210.03 LOT 8 QUALIFICATION CODE ADDRESS (SITE) 12 Hollycrest Dr PERMIT NO. 16-0155

CONSTRUCTION PERMIT APPLICATION

Applicant Completes: Sections I, II, III (optional), IV, VI, and VII

C-15-006180

I. IDENTIFICATION

1. Proposed Work Site at: 12 Hollycrest Dr, Brick NJ 08723
2. Name of Owner in Fee: Jonathan Dusza
   Te[redacted] e-ma[redacted]
   Address 12 Hollycrest Dr, Brick NJ 08723 (street) (municipality) XXXX 8.58 (zip code)
3. Ownership in Fee: Public ____ Private XXXX
4. Principal Contractor: SolarCity Corporation Tel. (609) 642-9018
   Address 9 Corporate Drive e-mail BStrasser@SolarCity.com
   Cranbury, NJ 08512
   License No. OR, if new home, Builder Reg. No. 13VH06160600 Exp. Date 03/31/2016
   Home Improvement Contractor Registration No. or Exemption Reason
   Federal Emp. ID No. 020781046 FAX: (609) 269-2166
   Architect or Engineer SolarCity Corporation Contact Hussein Kazan
   Address 9 Corporate Dr, Cranbury, NJ 08512 e-mail HKazan@solarcity.com
   (609) 642-9018 FAX: (609) 269-2166
   Responsible Person in Charge once Work has Begun SolarCity - Ben Strasser
   (609) 642-9018 FAX: (609) 269-2166

V. FEE SUMMARY (for office use only)

		Update	Update
1. Building	$ 220		
2. Electrical	249		
3. Plumbing			
4. Fire Protection			
5. Elevator Devices			
6. Subtotal			
7. Less 20% for State Plan Review	$		
8. Subtotal	$		
9. State Permit Surcharge Fee	36		
10. Subtotal	$		
11. Cert. of Occupancy			
12. Other			
13. TOTAL	$ 505		

VI. BUILDING/SITE CHARACTERISTICS (office use only)

1. Number of Stories
2. Height of Structure ft.
3. Area — Largest Floor No Change sq. ft.
4. New Building Area Solar Array = 660 sq. ft.
5. Volume of New Structure N/A cu. ft.
6. Max. Live Load N/A
7. Max. Occupancy Load N/A
8. If Industrialized Building: State Approved ____ HUD ____
9. Total Land Area Disturbed ____ sq. ft.
10. Flood Hazard Zone N/A
11. Base Flood Elevation N/A ft.
12. Wetlands yes ____ no X

IIa. PROPOSED WORK

- ☐ Minor Work
- ☐ New Building
- ☐ Addition
- ☐ Demolition
- ☐ Repair
- ☒ Alteration
- ☐ Renovation
- ☐ Reconstruction
- ☐ Asbestos Abat. -Subch. 8
- ☐ Lead Hazard Abatement
- ☐ Radon Remediation
- ☐ Annual Permit

IIb. SUBCODES (Check all that apply)

FOR OFFICE USE ONLY (Optional)

	Est. Cost	Plans Rec'd by	Date Rec'd	Rejection Date	Approval Date	Re-viewer	Resubmission Dates Approval	Resubmission Dates Rejection	Re-viewer
☒ Building	5,534	GMR	12-1-15		01/13/16	RCK			
☒ Electrical	12,913			12/9/15		AJC	1/14/16		AJC
☐ Plumbing									
☐ Fire Protection									
☐ Elevator		Eng Exempt			12/7/15	ECC			
TOTAL COST	$18,447								

VII. DESCRIPTION OF BUILDING

A. RESIDENTIAL (primary use)
1. State Specific Use: SFH
2. Use Group, Proposed: Select Group
3. Change in Use Group, Indicate Present: Select Group
4. No. of dwelling units: Total Units Income-restricted
   Gained, Sale
   Gained, Rental
   Lost, Sale
   Lost, Rental

B. NON-RESIDENTIAL (primary use)
1. State Specific Use:
2. Use Group, Proposed: Select Group
3. Change in Use Group, Indicate Present: Select Group

C. MIXED USE -List secondary use(s):

D. Construct. Classification: Present ____ Proposed ____

III. PLAN REVIEW (optional)

DO YOU WANT:
1. ☐ Partial Releases
2. ☐ Prototype Processing

IV. DOES OR WILL YOUR BUILDING CONTAIN ANY OF THE FOLLOWING?

1. ☐ Elevators/Escalators/Lifts/Dumbwaiters/Moving Walks
2. ☐ High Pressure Boilers
3. ☐ Pressure Vessels
4. ☐ Refrigeration Systems
5. ☐ Cross-Connections/Backflow Preventers
6. ☐ Hazardous Uses/Places of Assembly
7. ☐ Sprinklers/Standpipes
8. ☐ Smoke Control Systems in Open Wells
9. ☐ Underground Storage Tanks
10. ☐ Swimming Pools, Spas and Hot Tubs
11. ☐ LPGas Tanks

FLOOD ZONE

UCC F100-1 (rev 8/08)

Brick Township
401 Chambersbridge Rd
Brick, NJ 08723

Date Issued	03/20/2016
Control Number	C-15-006180
Permit Number	16-0155
Permit Issue Date	01/15/2016
Certificate Number	16-0155

Certificate

Construction Code Division

(Certificate of Approval)

Identification

Work Site Location: 12 HOLLYCREST DR. Brick Township, NJ Block: 210.03 Lot: 8 Qual:

Owner in Fee: DUSZA, JONATHAN

Owner Address: 12 HOLLYCREST DR BRICK NJ 08723

Telephone: [redacted]

Contractor SOLAR CITY CORPORATION

Address 9 CORPORATE DR. CRANBURY NJ 08512

Telephone: (609) 642-9018 Fax: (609) 269-2166

License Number or Builders Registration Number: 34EB01732700 13VH06160600 Federal Emp. Number: 020781046

Home Warranty Number:

Type of Warranty Plan: ☐ State ☐ Private

Use Group: R-5 Construction Classification:

Maximum Live Load: 0 Maximum Occupancy Load: 0

Description of Work/Use: SOLAR PANELS ...INSTALL 8.58 kw ROOF MOUNT PHOTOVOLTAIC SOLAR SYSTEM

Certificate Comments:

☐ **Certificate of Occupancy**
This serves notice that said building or structure has been constructed in accordance with the New Jersey Uniform Construction Code and is approved for occupancy.

☑ **Certificate of Approval**
This serves notice that the work completed has been constructed or installed in accordance with the New Jersey Uniform Construction Code and is approved. If the permit was issued for minor work, this certificate was based upon what was visible at the time of inspection.

☐ **Certificate of Continued Occupancy**
This serves notice that based on a general inspection of the visible parts of the building there are no imminent hazards and the building is approved for continued occupancy.

☐ **Temporary Certificate of Compliance**
The following conditions must be met no later than
or the owner will be subject to fine or order to vacate:
This certificate has an expiration date of:
Conditions to be met:

☐ **Certificate of Clearance - Lead Abatement 5:17**
This serves notice that based on written certification, lead abatement was performed as per NJAC5:17 to the following extent.

☐ Total removal of lead-based paint hazards in scope of work
☐ Partial or limited time period (years); see file

☐ **Certificate of Clearance - Asbestos Abatement**
This serves notice that based on written certification, asbestos abatement was performed to the following extent.

☐ Total removal of asbestos hazards in scope of work
☐ Partial or limited time period (years); see file

☐ **Certificate of Compliance**
This serves notice that said potentially hazardous equipment has been installed and/or maintained in accordance with the New Jersey Uniform Construction Code and is approved for use until

☐ **Temporary Certificate of Occupancy**
The following conditions must be met no later than:
or the owner will be subject to fine or order to vacate:
This certificate has an expiration date of:
Conditions to be met:

Construction Official

Fee: $0.00
Check Number:
Collected By:

OFFICE USE ONLY

DATE:	COMMENTS:	INITIALS:
12/21/15	input	
12/10/15	Fax Ticket Denied to 609-269-2164, then put in BLDG NP.	
1/14/16	Spoke to Adam @ SolarCity for pickup	MFE

* * * Communication Result Report (Mar. 21. 2016 8:14AM) * * *

1)
2)

Date/Time: Mar. 21. 2016 8:13AM

File No.	Mode	Destination	Pg(s)	Result	Page Not Sent
3241	Memory TX	916092692166	P. 1	OK	

Reason for error
E. 1) Hang up or line fail
E. 2) Busy
E. 3) No answer
E. 4) No facsimile connection
E. 5) Exceeded max. E-mail size
E. 6) Destination does not support IP-Fax

Brick Township
401 Chambersbridge Rd
Brick, NJ 08723

Date Issued 03/20/2016
Control Number C-15-006180
Permit Number 16-0155
Permit Issue Date 01/15/2016
Certificate Number 16-0155

Certificate

Construction Code Division
(Certificate of Approval)

Identification

Work Site Location: 12 HOLLYCREST DR. Brick Township, NJ Block: 21003 Lot: 8 Qual:
Owner In Fee: DUSZA, JONATHAN
Owner Address: 12 HOLLYCREST DR. BRICK NJ 08723
Telephone: [redacted]
Contractor SOLAR CITY CORPORATION
Address 9 CORPORATE DR. CRANBURY NJ 08512
Telephone: (609) 642-9018 Fax: (609) 269-2166
License Number or Builders Registration Number: 34EB0173270D 13VH06160500 Federal Emp. Number: 020761046

Home Warranty Number:
Type of Warranty Plan: ☐ State ☐ Private
Use Group: R-5 Construction Classification:
Maximum Live Load: 0 Maximum Occupancy Load: 0
Description of Work/Use: SOLAR PANELS ...INSTALL 8.58 kw ROOF MOUNT PHOTOVOLTAIC SOLAR SYSTEM

Certificate Comments:

☐ **Certificate of Occupancy**
This serves notice that said building or structure has been constructed in accordance with the New Jersey Uniform Construction Code and is approved for occupancy.

☑ **Certificate of Approval**
This serves notice that the work completed has been constructed or installed in accordance with the New Jersey Uniform Construction Code and is approved. If the permit was issued for minor work, the certificate was based upon what was visible at the time of inspection.

☐ **Certificate of Continued Occupancy**
This serves notice that based on a general inspection of the visible parts of the building there are no imminent hazards and the building is approved for continued occupancy.

☐ **Temporary Certificate of Compliance**
The following conditions must be met no later than
or the owner will be subject to fine or order to vacate:
This certificate has an expiration date of:
Conditions to be met:

☐ **Certificate of Clearance - Lead Abatement 5:17**
This serves notice that based on written certification, lead abatement was performed as per NJAC5:17 to the following extent.
☐ Total removal of lead-based paint hazards in scope of work
☐ Partial or limited time period (years); see file

☐ **Certificate of Clearance - Asbestos Abatement**
This serves notice that based on written certification, asbestos abatement was performed to the following extent.
☐ Total removal of asbestos hazards in scope of work
☐ Partial or limited time period (years); see file

☐ **Certificate of Compliance**
This serves notice that said potentially hazardous equipment has been installed and/or maintained in accordance with the New Jersey Uniform Construction Code and is approved for use until

☐ **Temporary Certificate of Occupancy**
The following conditions must be met no later than:
or the owner will be subject to fine or order to vacate:
This certificate has an expiration date of:
Conditions to be met:

Construction Official

Fee: $0.00
Check Number:
Collected By:

Date Printed: 03/20/2016 U.C.C. F260 (rev. 08/05)

Page 1

OFFICE DATE RECEIVED: _____

VIII. PRIOR APPROVALS CHECKLIST (office use only)	LOCAL APPROVAL		COUNTY APPROVAL		REGIONAL APPROVAL		STATE APPROVAL		COMMENTS
	Prelimin. Initial	Final Date	Prelimin. Initial	Final Date	Prelimin. Initial	Final Date	Prelimin. Initial	Final Date	
☒ Zoning Officer	JC	12/7/15							ZA-15-01714
☐ Planning Board									
☐ Zoning Board									
☐ Sewer Authority									
☐ Water Authority									
☐ Police Department									
☐ Health Department									
☐ Soil Conservation									
☐ N.J. Department of Community Affairs									
☐ N.J. Department of Transportation									
☐ N.J. Department of Environmental Protection									
☐ Utility Dig No.									
☐									
☐									

IX. SUBCODES AND SPECIAL REGULATIONS APPLICABLE (office use only—optional)

	Name of Code & Edition		Name of Code & Edition		
Building		Energy		Other	
Electrical		Barrier Free			
Plumbing		Flood Hazard			
Fire Protection		As Built Elevation Cert.			
Mechanical		Other			

X. CERTIFICATES ISSUED (office use only)

		DATE ISSUED	DATE EXPIRED	DATE REISSUED	DATE EXPIRED
☐ Temporary Certificate of Occupancy	No.				
☐ Temporary Certificate of Compliance	No.				
☐ Continued Certificate of Occupancy	No.				
☐ Certificate of Compliance	No.				
☐ Certificate of Occupancy	No.				
☐ Certificate of Approval	No.				
☐ Lead Abatement Clearance Certificate	No.				

CERTIFICATION IN LIEU OF OATH

I. OWNER SECTION (to be completed if the applicant is the owner in fee)

I hereby certify that I am the owner in fee of the property listed on Page 1.

Mark the following applicable boxes:

A. ( ) I further certify that a new home (private residence) will be constructed on this property for my own use and occupancy. This dwelling is to be occupied by myself and is not to be used for any purpose other than single family residential use. I attest that all construction, plumbing, or electrical work will be done, in whole or in part, by me or by subcontractors under my supervision, in accordance with all applicable laws; and, I further acknowledge that said new home is not covered under the New Home Warranty and Builders Registration Act (N.J.S.A. 46:3B-1 et seq.) and that such fact shall be disclosed to any person purchasing this property within ten years of the date of issuance of a certificate of occupancy.

I UNDERSTAND THAT IN MARKING BOX A, I ACKNOWLEDGE THAT I AM ASSUMING RESPONSIBILITY FOR THE WORK DONE ON SAID PROPERTY, THE CONDITION OF THE PROPERTY PRIOR TO, DURING, AND AFTER ANY WORK PERFORMED, AND FOR THE PERFORMANCE OF THE SUBCONTRACTORS I HIRE, EMPLOY, OR OTHERWISE CONTRACT OR WITH WHOM I MAKE AGREEMENTS TO PERFORM WORK. I AM VOLUNTARILY AND KNOWINGLY ASSUMING THIS RESPONSIBILITY.

B. ( ) I further certify the following as required by the New Jersey Uniform Construction Code, N.J.A.C. 5:23-2.15(f)1.ix:

I personally prepared the plans submitted for: 1) the new home referred to in A.; or, 2) an addition, alteration, renovation, or repair to an existing single family residence owned and occupied by myself and located on the property listed on Page 1; or, 3) a new structure that will be physically separate from, but that will be deemed part of, an existing single family residence that is owned and occupied by myself and located on the property listed on Page 1.

C. ( ) I further certify that I will perform or supervise the following work:
C.1. ( ) Building C.2. ( ) Fire Protection

I further certify that I will perform the following work:
C.3. ( ) Electrical C.4. ( ) Plumbing

D. ( ) I agree to advise all contractors on this project that they are required to be registered with the New Jersey Division of Taxation and to comply with all New Jersey tax laws.

I further certify the following as required by the Uniform Construction Code, N.J.A.C. 5:23-2.15(a)5: All required State, county, and local prior approvals have been given, including such certification as the construction official may require.

I understand that if any of the above statements are willfully false, I am subject to punishment.

Signature _____ Date _____

II. AGENT SECTION (to be completed if the applicant is not the owner in fee)

I hereby certify the following as required by the Uniform Construction Code, N.J.A.C. 5:23-2.15(d): the proposed work is authorized by the owner in fee; and I have been authorized by the owner in fee to make this application as his agent.

I further certify the following as required by the Uniform Construction Code, N.J.A.C. 5:23-2.15(a)5: All required State, county, and local prior approvals have been given, including such certification as the construction official may require.

I agree to advise all contractors on this project that they are required to be registered with the New Jersey Division of Taxation and to comply with all New Jersey tax laws.

I understand that if any of the above statements are willfully false, I am subject to punishment.

(X) Check if contractor.

Agent Name Christine Germek of SolarCity Corporation

Address 9 Corporate Drive

Cranbury, NJ 08512

Telephone (609) 642-9018

Signature

III. ( ) LEAD HAZARD ABATEMENT: Include Homeowner or Building Owner Affidavit as per N.J.A.C. 5:17.

OFFICE USE ONLY

DATE:	COMMENTS:	INITIALS:
12/21/15	input	
12/10/15	Fax Elect Denial to 609-269-2164, then put in BLDG NP.	
1/14/16	Spoke to Adam @ SolarCity for pickup	MFE

BUILDING SUBCODE
TECHNICAL SECTION

NEC 2011 Compliant (Grace Period)

Date Received Control # 1-15-16

Date Issued Permit # 16-0155

A. IDENTIFICATION—APPLICANT: COMPLETE ALL APPLICABLE INFORMATION. WHEN CHANGING CONTRACTORS, NOTIFY THIS OFFICE. CALL UTILITY DIG NO: 1-800-272-1000.

Block 210.03 Lot 8 Qualification Code

Work Site Location 12 Hollycrest Dr, Brick NJ 08723

Owner in Fee: Jonathan Dusza

Tel. [redacted] e-mail

Address 12 Hollycrest Dr, Brick NJ 08723

Contractor: SolarCity Corporation (street) (municipality) Tel. (609) 642-9018 (zip code)

Address 9 Corporate Drive e-mail BStrasser@SolarCity.com

Cranbury, NJ 08512

Contractor License No. or Builder Registration No. 13VH06160600 Exp. Date 03/31/2016

Home Improvement Contractor Registration No. or Exemption Reason (if applicable):

Federal Emp. ID No. 020781046 FAX: (609) 269-2166

JOB SUMMARY (Office Use Only)

PLAN REVIEW	Date	Initial
[ ] No Plans Required		
[✓] All	01/13/16	KEH
[ ] Footings/Foundations		
[ ] Structural/Framework		
[ ] Exterior		
[ ] Interior		

Joint Plan Review Required:

[ ] Elec. [ ] Plumb. [ ] Fire [ ] Elevator

SUBCODE APPROVAL for PERMIT

Date: 01/13/16

Approved by: KEH

SUBCODE APPROVAL for CERTIFICATE

[ ] CO [ ] CCO [✓] CA

Date: 03/17/16

Approved by: KEH

INSPECTIONS Type:	Failure	Dates (Month/Day) Failure	Approval	Initial
Footing				
Footing Bonding				
Foundation				
Slab				
Frame				
Truss Sys./Bracing				
Barrier-Free				
Insulation				
Finishes -Base Layer				
Finishes -Final				
Energy				
Mechanical				
TCO				
Other				
Final			3-15-16	KW
Barrier-Free				

B. BUILDING CHARACTERISTICS

Use Group Present Select Group Proposed Select Group

Constr. Class Present Proposed

No. of Stories

Height of Structure ft.

Area — Largest Floor No Change sq. ft.

New Bldg. Area/All Floors Solar Array = 660 sq. ft.

Volume of New Structure N/A cu. ft.

Max. Live Load N/A

Max. Occupancy Load N/A

If Industrialized Building:

State Approved HUD

Est. Cost of Bldg. Work:

1. New Bldg. $ 5,534
2. Rehabilitation $
3. Total (1+ 2) $ 5,534

C. CERTIFICATION IN LIEU OF OATH

I hereby certify that I am the (agent of) owner of record and am authorized to make this application.

Sign here:

Print name here: Benjamin Strasser

D. TECHNICAL SITE DATA

DESCRIPTION OF WORK

Install sleekmount (rail-less) system for (33) solar panels

TYPE OF WORK:

[ ] New Building
[ ] Addition
[ ] Rehabilitation
[ ] Roofing
[ ] Siding
[ ] Fence Height (exceeds 6')
[ ] Sign Sq. Ft.
[ ] Pool
[ ] Retaining Wall Sq. Ft.
[ ] Asbestos Abatement Subchapter 8
[ ] Lead Haz. Abatement NJAC 5:17
[ ] Radon Remediation
[X] Other Solar Panels
[ ] Demolition

FEE (Office Use Only)

$

Administrative Surcharge $

Minimum Fee $

State Permit Surcharge Fee $

TOTAL FEE $

U.C.C. F110 (rev. 11/09)
Internet version

Applicant: When submitting this form to your Local Construction Code Enforcement Office, please provide one original plus three photocopies.

SolarCity

Version #48.2
WS

Project/Job # 087666

RE: Installation Approval Letter

Project: Dusza Residence
12 Hollycrest Dr
Brick, NJ 08723

To Whom It May Concern,

On the above referenced project, the roof structural framing has been reviewed for additional loading due to the installation of the solar PV addition to the roof. The structural review, including the plans and calculations only apply to the section of roof that is directly supporting the solar PV system and its supporting elements.

SolarCity has reviewed the PV installation that was specified for this project. The review was performed to verify that the installation was performed in general conformance with the plans and specifications and that any modifications were acceptable.

It is our opinion that the work has been completed in general conformance of the provisions of the approved permits in accordane with the requirements of the NJ Edition of 2009 IBC/IRC.

Should you have any further questions or requirements pertaining to this project, please do not hesitate to contact me.

Sincerely,

Humphrey Kariuki, P.E.
Professional Engineer
T: 443.451.3515
email: hkariuki@solarcity.com

STATE OF NEW JERSEY
HUMPHREY K. KARIUKI
24GE05148000
LICENSED
PROFESSIONAL ENGINEER

Digitally signed by
Humphrey Kariuki
Date: 2016.02.22
17:34:39 -05'00'

ELECTRICAL SUBCODE
TECHNICAL SECTION

NEC 2011 Compliant (Grace Period)

Date Received 1-15-16
Control # C-15-006180
Date Issued
Permit # 16-0155

A. IDENTIFICATION—APPLICANT: COMPLETE ALL APPLICABLE INFORMATION. WHEN CHANGING CONTRACTORS, NOTIFY THIS OFFICE. CALL UTILITY DIG NO: 1-800-272-1000.

Block 210.03 Lot 8 Qualification Code

Work Site Location 12 Hollycrest Dr, Brick NJ 08723

Owner in Fee: Jonathan Dusza

Tel. [redacted] e-mail

Address 12 Hollycrest Dr, Brick NJ 08723
street municipality zip code

Contractor: SolarCity Corporation Tel. (609) 642-9018

Address 9 Corporate Drive e-mail BStrasser@SolarCity.com

Cranbury, NJ 08512

Contractor License No. 34EI01732700 Exp. Date 03/31/18

Home Improvement Contractor Registration No. or Exemption Reason (if applicable):

Federal Emp. ID No. 020781046 FAX: (609) 269-2166

B. ELECTRICAL CHARACTERISTICS

Use Group Present SFD Proposed No Change

[ ] Pole/Pad # [ ] Temporary [ ] Other

Building Occupied as Utility Co. PSE&G

Est. Cost of Elec. Work $ 12,913

JOB SUMMARY (Office Use Only)

PLAN REVIEW

[ ] No Plans Required

[ ] Partial -Underslab Utilities Approved

Date: Approved by:

[✓] Electric Plans Approved

Date: 1/14/16 Approved by: PSE

Joint Plan Review Required:

[ ] Bldg. [ ] Plumb. [ ] Fire. [ ] Elev.

SUBCODE APPROVAL for PERMIT

Date: 1/14/16

Approved by:

SUBCODE APPROVAL for CERTIFICATE

[ ] CO [ ] CCO [✓] CA

Date: 3/15/16

Approved by:

INSPECTIONS Type:	Failure	Failure	Approval	Initial
	Dates (Month/Day)			
Rough				
Barrier-Free				
Trench				
Temp. Serv.				
Constr. Serv.				
TCO				
Other				
Service				
Final		3/15/16	3/15/16	
Barrier-Free				

Temp. Cut-in-Card Date Issued

Final Cut-in-Card Date Issued

Annual Pool Inspection

Date of Grounding and Bonding Certification

C. CERTIFICATION IN LIEU OF OATH

I hereby certify that I am the (agent of) owner of record and am authorized to make this application and perform the work listed on this application.

Applicant sign/Contractor sign and seal here:

Print name here: Javier Hurtado

[X] Licensed Elec. Contractor [ ] Certif'd Landscape Irrigation Cont'r [ ] Exempt Applicant

D. TECHNICAL SITE DATA

DESCRIPTION OF WORK:
Install sleekmount (rail-less) system for (33) solar panels

QTY.	SIZE	ITEMS	FEE (Office Use Only)
		Lighting Fixtures	
		Receptacles	
		Switches	
		Detectors	
		Light Poles	
		Motors—Fract. HP	
		Emergency & Exit Lights	
		Communications Points	
		Alarm Devices/F.A.C. Panel	
0		TOTAL NUMBERS	$
		Pool Permit/with UW Lights	
		Storable Pool/Spa/Hot Tub	
		KW Elec. Range/Receptacle	
		KW Oven/Surface Unit	
		KW Elec. Water Heater	
		KW Elec. Dryer/Receptacle	
		KW Dishwasher	
		HP Garbage Disposal	
		KW Central A/C Unit	
		HP/KW Space Heater/Air Handler	
		KW Baseboard Heat	
		HP Motors 1/+ HP	
		KW Transformer/Generator	
1	60	AMP Disconnect	
1	25	AMP Inverter	
		AMP	
1	9	KW PV Array	

Administrative Surcharge $

Minimum Fee $

State Permit Surcharge Fee $

TOTAL FEE $

U.C.C. F120 (rev. 11/09)
Internet version

Applicant: When submitting this form to your Local Construction Code Enforcement Office, please provide one original plus three photocopies.

CONSTRUCTION PERMIT

Date Issued 1-15-16
Control # C-15-006180
Permit # 16-0155

IDENTIFICATION Block: 210.03 Lot: 8 Qualifier
Work Site Location: 12 HOLLYCREST DR, Brick Township, NJ
Contractor SOLAR CITY CORPORATION
Address 9 CORPORATE DR. CRANBURY NJ 08512
Owner in Fee DUSZA, JONATHAN
12 HOLLYCREST DR BRICK NJ 08723
Telephone: (609) 642-9018
Lic. No. or Bldrs. Reg. No. 13VH06160600
Telephone: [redacted]
Federal Employee. No. 020781046

Is hereby granted permission to perform the following work:

- [x] BUILDING
- [ ] PLUMBING
- [ ] LEAD HAZARD ABATEMENT
- [x] ELECTRICAL
- [ ] FIRE PROTECTION
- [ ] DEMOLITION
- [ ] ELEVATOR DEVICES
- [ ] ASBESTOS ABATEMENT (Subchapter 8 only)
- [ ] OTHER

DESCRIPTION OF WORK:
SOLAR PANELS ...INSTALL 8.58 kw ROOF MOUNT PHOTOVOLTAIC SOLAR SYSTEM

PAYMENTS (Office Use Only)

Building	$249
Electrical	$220
Plumbing	$0
Fire Protection	$0
Elevator Devices	$0
Other	$0.00
DCA Training Fee	$36
CO Fee	
Other	$0
Total	$505 -50
Check No.	7647116 $555
Cash	$0
Credit	$0
Collected By	

Note: If constuction does not commence within one (1) year of date of issuance, or if construction ceases for a period of six (6) months, this permit is void.
Estimated Cost of Work $18,447

David J. Newman Jr. 1-14-16
Construction Official Date

U.C.C. F170
equiv (rev 1/04)

1 WHITE - INSPECTOR 2 CANARY - OFFICE 3 PINK - TAX ASSESSOR 4 GOLD - APPLICANT

REQUIRED INSPECTIONS

Construction work must be inspected in accordance with the State Uniform Construction Code Regulations N.J.A.C. 5:23-2.18. This agency will carry out such periodic inspections during the progress of work as are necessary to insure that the work installed conforms with the requirements of the Uniform Construction Code.

The owner or other responsible person in charge of work must notify this agency when work is ready for any required inspections specified below. Requests for inspections must be made at least 24 hours prior to the time the inspection is desired. Inspections will be performed within three business days of the time for which they are requested. The work must not proceed in a manner which will preclude the inspection until it has been made and approval granted.

- [x] Required inspections for all subcodes for one- and two-family dwellings are as follows:
  1. The bottom of footing trenches before placement of footings, except that in cases of pile foundations, inspections shall be made in accordance with the requirements of the building subcode.
  2. Foundations and all walls up to grade level prior to back filling.
  3. All structural framing, connections, wall and roof sheathing and insulation; electrical rough wiring, panel and service installation; rough plumbing. The framing inspection shall take place after the rough electrical and plumbing inspections and after the installation of the heating, ventilation and /or air conditioning duct system. The insulation inspection shall be performed after all other subcode rough inspections and prior to the installation of any interior finish material.
  4. Installation of all finished materials, sealings of exterior joints, plumbing piping, trim and fixtures; electrical wiring, devices and fixtures; mechanical systems equipment.

  Additional required inspections for all subcodes of construction, for other than one- and two-family dwellings, are fire suppression systems, heat producing devices and Barrier Free subcode accessibility, if applicable.

01/15/16 00155BM7315
PAYM SERV 006
#0155
BUILDING $249.00
ELEC $220.00
DCA $36.00
$505.00

- [ ] Required special inspections. The applicant by accepting the permit will be deemed to have consented to these requirements:

- [x] A final inspection is required for each applicable subcode area before a final Certificate of Occupancy or Approval may be issued. The final inspections include the installation of all interior and exterior finish materials, sealing of exterior joints, mechanical system and other required equipment; electrical wiring, devices and fixtures; plumbing pipes, trim and fixtures; tests required by any provision of the adopted subcodes, Barrier Free accessibility, if applicable; and verification of compliance with NJAC 5:23-3.5, "Posting structures".

- [x] A complete copy of released plans must be kept on the job site.

If you do not understand any of this information, please ask.

RECEIVING CLERK: O.K.
DATE REC'D: 12/1/1

ZONING PERMIT APPLICATION

PERMIT #: 1-15-16
DATE ISSUED:

BLOCK: 210.03 LOT: 8 QUALIFIER: SITE ADDRESS: 12 Hollycrest Dr 16-00057

IDENTIFICATION:

1. NAME OF OWNER IN FEE: Jonathan Dusza
   COMPLETE ADDRESS: 12 Hollycrest Dr
   Brick NJ 08723
   PHONE # [redacted] AIL [redacted]
2. NAME OF APPLICANT: Ben Strasser (SolarCity)
   APPLICANT ADDRESS: 9 Corporate Drive
   Cranbury, NJ 08512
   PHONE # 609-642-9018 EMAIL: BStrasser@Solarcity.Com
3. RESPONSIBLE PERSON FOR WORK: Ben Strasser-SolarCity
   PHONE# 609-642-9018 FAX# 609-266-2166
4. SIGNATURE OF APPLICANT:

FOR OFFICE USE ONLY

FEE SUMMARY:

APPLICATION FEE: $ 50
OTHER: $
TOTAL: $ 50

REQUIRED BY APPLICANT

RESIDENTIAL: X
COMMERCIAL:
EXISTING USE: SFD
PROPOSED USE SFD

BOARD APPROVAL: ___ PB ___ ZB
RESOLUTION#:
APPROVAL DATE:

PROJECT DESCRIPTION: (PLEASE CHECK APPLICABLE WORK & DESCRIBE)
*NEW BUILDING: *ADDITION *ALTERATION *PORCH *DECK

POOL: ABOVE GROUND IN GROUND FENCE: HEIGHT TYPE

HEIGHT: (*APPLICABLE)

OTHER Solar Panels

DESCRIPTION: Install (33) on existing SFD, flush with roof, 5 inches above roof, will not exceed roof ridge in elevation.

ZONING REVIEW:
DATE REVIEWED: 12-4-15 DATE DENIED: DATE APPROVED: 12-4-15 INTLS: CM

(SEE BACK PAGE)

OFFICE USE ONLY

RECEIVED
DEC 07 2015
ZONING

ZONING REVIEW:

DATE REVIEWED: 12/7/15 DATE DENIED: — DATE APPROVED: 12/7/15 INTLS: SEZ

DATE:	COMMENTS:	INITIALS:
12/7/15	SENT TO ECC FOR QR	SEZ

Brick Township
401 Chambers Bridge Rd.

Brick, NJ 08723
(732) 262-1336

Date Issued: 1-15-16
Application Number: ZA-15-01714
Application Date: 12/04/2015
Project Number:
Permit Number: 16-00057
Fee: $50

Zoning Permit

Worksite Location: **12 HOLLYCREST DR.**
Brick Township, NJ 08723

Block: **210.03**
Lot: **8**
Qualifier:
Zone: **R-7.5**

Owner: **DUSZA, JONATHAN**
Address: **12 HOLLYCREST DR**
BRICK, NJ 08723

Applicant: **SOLAR CITY CORPORATION**
Address: **9 Corporate Dr.**
Cranbury, NJ 08512

Application Approved Date: 12/04/2015

This Certifies that an application for the issuance of a Zoning Permit has been examined.

Use is: Single-Family Residential
Nonconforming Use is:

Work Description:
Solar Energy System - Installation of a 9 KW solar panel system, mounted on the roof of the house.

Additional Zoning permit required for any other work done on property.

Upon review it was determined that the Zoning Permit:

- ☑ Permitted by Ordinance
- ☐ Permitted by Variance approved on: _____
- ☐ Valid Nonconforming Use is established by
  - ☐ Zoning Board of Adjustment
  - ☐ Zoning Officer

ne
, Office of Zoning — 12/04/2015 Date

ng Officer — 12/7/15 Date

Brick Township
401 Chambers Bridge Rd.

Brick, NJ 08723
(732) 262-1336

Date Issued: 1-15-16
Application Number: ZA-15-01714
Application Date: 12/04/2015
Project Number:
Permit Number: 16-00057
Fee: $50

Zoning Permit

Worksite Location: **12 HOLLYCREST DR.**
Brick Township, NJ 08723

Block: **210.03**
Lot: **8**
Qualifier:
Zone: **R-7.5**

Owner: **DUSZA, JONATHAN**
Address: **12 HOLLYCREST DR**
BRICK, NJ 08723

Applicant: **SOLAR CITY CORPORATION**
Address: **9 Corporate Dr.**
Cranbury, NJ 08512

Application Approved Date: 12/04/2015

This Certifies that an application for the issuance of a Zoning Permit has been examined.

Use is: Single-Family Residential
Nonconforming Use is:

Work Description:
Solar Energy System - Installation of a 9 KW solar panel system, mounted on the roof of the house.

Additional Zoning permit required for any other work done on property.

Upon review it was determined that the Zoning Permit:

- ☑ Permitted by Ordinance
- ☐ Permitted by Variance approved on: _____
- ☐ Valid Nonconforming Use is established by
  - ☐ Zoning Board of Adjustment
  - ☐ Zoning Officer

Christopher J. Romano, Office of Zoning — 12/04/2015 Date

Sean Kinnevy, Zoning Officer — 12/7/15 **Date**

ABBREVIATIONS

A	AMPERE
AC	ALTERNATING CURRENT
BLDG	BUILDING
CONC	CONCRETE
DC	DIRECT CURRENT
EGC	EQUIPMENT GROUNDING CONDUCTOR
(E)	EXISTING
EMT	ELECTRICAL METALLIC TUBING
FSB	FIRE SET-BACK
GALV	GALVANIZED
GEC	GROUNDING ELECTRODE CONDUCTOR
GND	GROUND
HDG	HOT DIPPED GALVANIZED
I	CURRENT
Imp	CURRENT AT MAX POWER
Isc	SHORT CIRCUIT CURRENT
kVA	KILOVOLT AMPERE
kW	KILOWATT
LBW	LOAD BEARING WALL
MIN	MINIMUM
(N)	NEW
NEUT	NEUTRAL
NTS	NOT TO SCALE
OC	ON CENTER
PL	PROPERTY LINE
POI	POINT OF INTERCONNECTION
PV	PHOTOVOLTAIC
SCH	SCHEDULE
S	STAINLESS STEEL
STC	STANDARD TESTING CONDITIONS
TYP	TYPICAL
UPS	UNINTERRUPTIBLE POWER SUPPLY
V	VOLT
Vmp	VOLTAGE AT MAX POWER
Voc	VOLTAGE AT OPEN CIRCUIT
W	WATT
3R	NEMA 3R, RAINTIGHT

ELECTRICAL NOTES

1. THIS SYSTEM IS GRID-INTERTIED VIA A UL-LISTED POWER-CONDITIONING INVERTER.
2. THIS SYSTEM HAS NO BATTERIES, NO UPS.
3. A NATIONALLY-RECOGNIZED TESTING LABORATORY SHALL LIST ALL EQUIPMENT IN COMPLIANCE WITH ART. 110.3.
4. WHERE ALL TERMINALS OF THE DISCONNECTING MEANS MAY BE ENERGIZED IN THE OPEN POSITION, A SIGN WILL BE PROVIDED WARNING OF THE HAZARDS PER ART. 690.17.
5. EACH UNGROUNDED CONDUCTOR OF THE MULTIWIRE BRANCH CIRCUIT WILL BE IDENTIFIED BY PHASE AND SYSTEM PER ART. 210.5.
6. CIRCUITS OVER 250V TO GROUND SHALL COMPLY WITH ART. 250.97, 250.92(B).
7. DC CONDUCTORS EITHER DO NOT ENTER BUILDING OR ARE RUN IN METALLIC RACEWAYS OR ENCLOSURES TO THE FIRST ACCESSIBLE DC DISCONNECTING MEANS PER ART. 690.31(E).
8. ALL WIRES SHALL BE PROVIDED WITH STRAIN RELIEF AT ALL ENTRY INTO BOXES AS REQUIRED BY UL LISTING.
9. MODULE FRAMES SHALL BE GROUNDED AT THE UL-LISTED LOCATION PROVIDED BY THE MANUFACTURER USING UL LISTED GROUNDING HARDWARE.
10. MODULE FRAMES, RAIL, AND POSTS SHALL BE BONDED WITH EQUIPMENT GROUND CONDUCTORS.

JURISDICTION NOTES

Zoning Review
Approval
aw
12-4-15 Solar on roof

LICENSE

MODULE GROUNDING METHOD: ZEP SOLAR

AHJ: Brick Township

UTILITY: First Energy (Jersey Central Power & Light)

GENERAL NOTES

1. ALL WORK SHALL COMPLY WITH THE 2009 IRC NJ EDITION.
2. ALL ELECTRICAL WORK SHALL COMPLY WITH THE 2011 NATIONAL ELECTRIC CODE.

VICINITY MAP

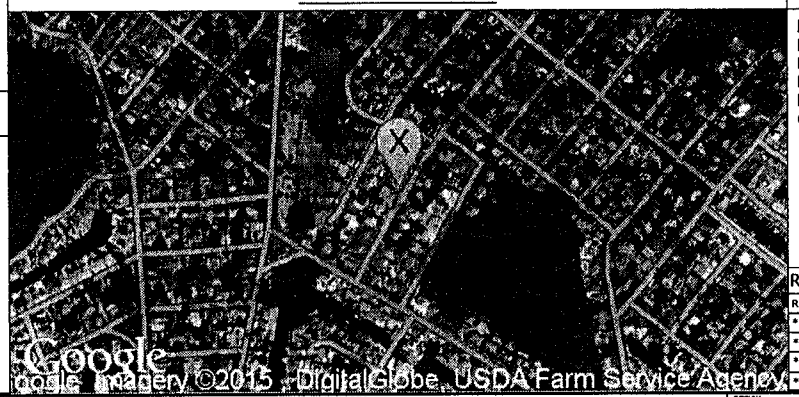

INDEX

PV1 COVER SHEET
PV2 PROPERTY PLAN
PV3 SITE PLAN
PV4 STRUCTURAL VIEWS
PV5 THREE LINE DIAGRAM
Cutsheets Attached

REV	BY	DATE	COMMENTS
REV A	NAME	DATE	COMMENTS
*	*	*	*
*	*	*	*
*	*	*	*
*	*	*	*

CONFIDENTIAL - THE INFORMATION HEREIN CONTAINED SHALL NOT BE USED FOR THE BENEFIT OF ANYONE EXCEPT SOLARCITY INC., NOR SHALL IT BE DISCLOSED IN WHOLE OR IN PART TO OTHERS OUTSIDE THE RECIPIENT'S ORGANIZATION, EXCEPT IN CONNECTION WITH THE SALE AND USE OF THE RESPECTIVE SOLARCITY EQUIPMENT, WITHOUT THE WRITTEN PERMISSION OF SOLARCITY INC.

JOB NUMBER: JB-087666 00
MOUNTING SYSTEM: Comp Mount Type C
MODULES: (33) REC # REC260PEZ
INVERTER: ABB # AURORA PVI-6000-OUTD-US-Z-A-RGM

PREMISE OWNER:
DUSZA, JONATHAN
12 HOLLYCREST DR
BRICK, NJ 08723
TMK: *
(908) 755-7855

DESCRIPTION:
DUSZA RESIDENCE
8.58 KW PV ARRAY
TMK OWNER: *

PAGE NAME:
COVER SHEET

DESIGN:
Adria Weber
Adria McL Weber

SHEET: PV 1 REV: DATE: 7/21/2015

SolarCity
3055 Clearview Way
San Mateo, CA 94402
T:(650) 638-1028 F:(650) 638-1029
(888)-SOL-CITY (765-2489) www.solarcity.com

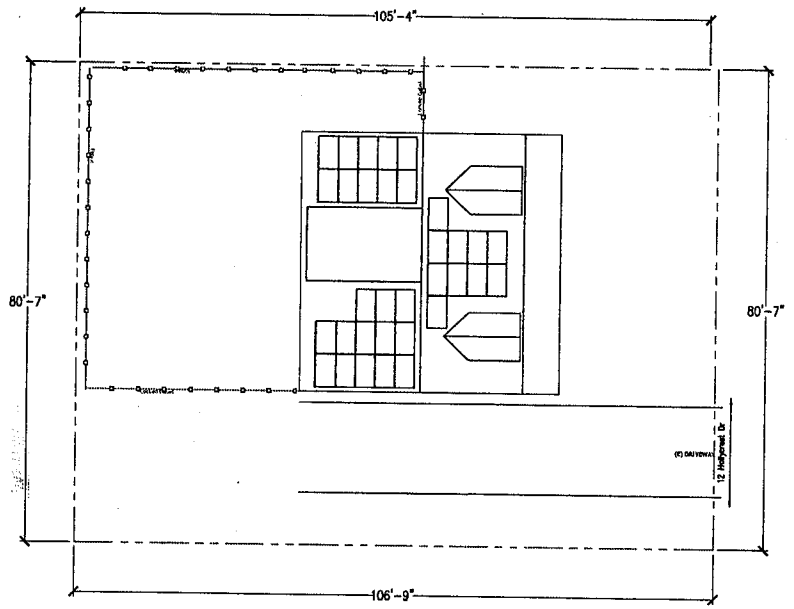

PROPERTY PLAN

Scale:1" = 20'-0'

0 20' 40'

CONFIDENTIAL – THE INFORMATION HEREIN CONTAINED SHALL NOT BE USED FOR THE BENEFIT OF ANYONE EXCEPT SOLARCITY INC., NOR SHALL IT BE DISCLOSED IN WHOLE OR IN PART TO OTHERS OUTSIDE THE RECIPIENT'S ORGANIZATION, EXCEPT IN CONNECTION WITH THE SALE AND USE OF THE RESPECTIVE SOLARCITY EQUIPMENT, WITHOUT THE WRITTEN PERMISSION OF SOLARCITY INC.

JOB NUMBER: JB-087666 00

MOUNTING SYSTEM: Comp Mount Type C

MODULES: (33) REC # REC260PEZ

INVERTER: ABB # AURORA PVI-6000-OUTD-US-Z-A-RGM

PREMISE OWNER:
DUSZA, JONATHAN
12 HOLLYCREST DR
BRICK, NJ 08723

(908) 755-7855

DESCRIPTION:
DUSZA RESIDENCE
8.58 KW PV ARRAY

PAGE NAME:
PROPERTY PLAN

DESIGN: Adria Weber

Adria M. Weber

SHEET: PV 2 REV: DATE: 7/21/2015

SolarCity
3055 Clearview Way
San Mateo, CA 94402
T:(650) 638-1028 F:(650) 638-1029
(888)-SOL-CITY (765-2489) www.solarcity.com

MP1	PITCH: 45 AZIMUTH: 120 MATERIAL: Comp Shingle	ARRAY PITCH: 45 ARRAY AZIMUTH: 120 STORY: 2 Stories
MP2	PITCH: 45 AZIMUTH: 300 MATERIAL: Comp Shingle	ARRAY PITCH: 45 ARRAY AZIMUTH: 300 STORY: 2 Stories

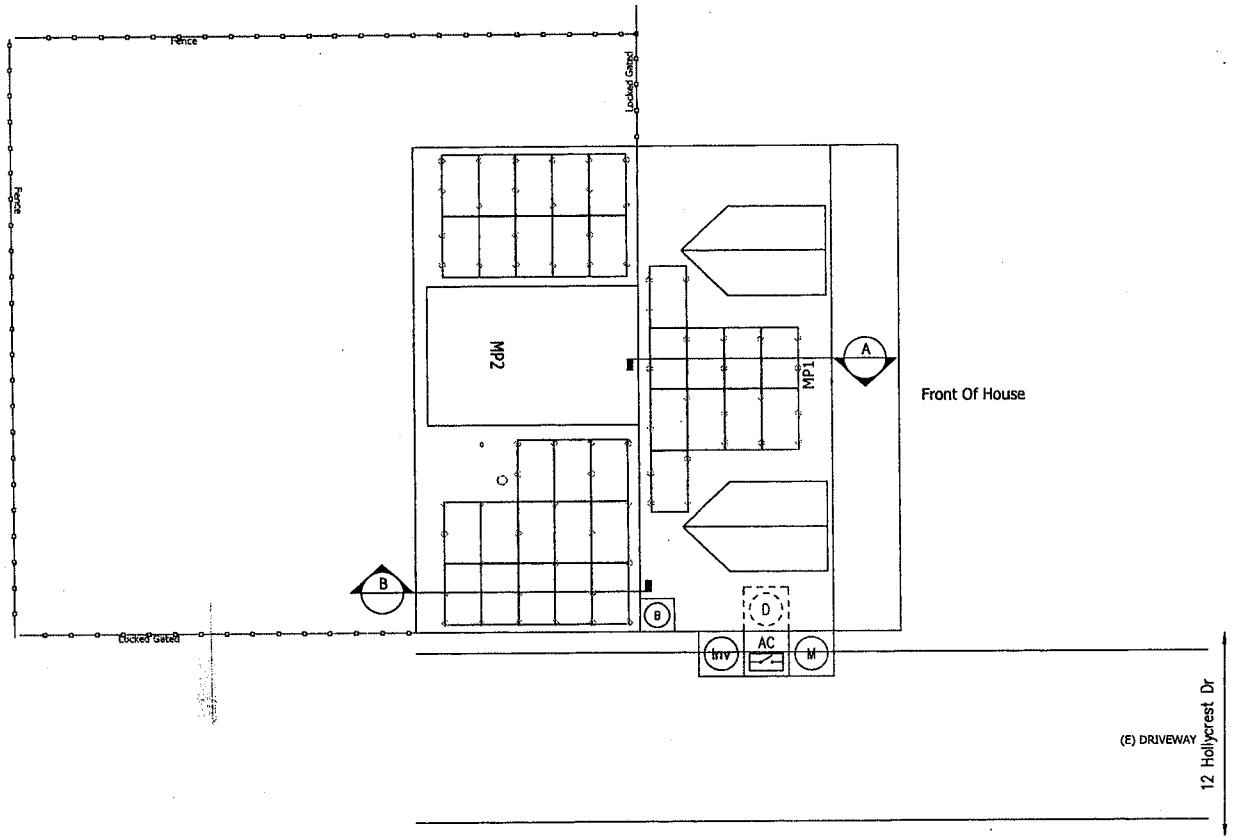

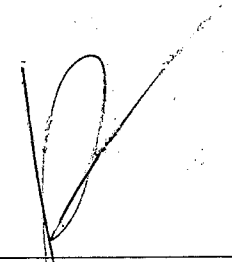

LEGEND

- (E) UTILITY METER & WARNING LABEL
- INVERTER W/ INTEGRATED DC DISCO & WARNING LABELS
- DC DISCONNECT & WARNING LABELS
- AC DISCONNECT & WARNING LABELS
- DC JUNCTION/COMBINER BOX & LABELS
- DISTRIBUTION PANEL & LABELS
- LOAD CENTER & WARNING LABELS
- DEDICATED PV SYSTEM METER
- STANDOFF LOCATIONS
- CONDUIT RUN ON EXTERIOR
- CONDUIT RUN ON INTERIOR
- GATE/FENCE
- HEAT PRODUCING VENTS ARE RED
- INTERIOR EQUIPMENT IS DASHED

SITE PLAN

Scale: 3/32" = 1'

0 1' 10' 21'

N E S W

CONFIDENTIAL – THE INFORMATION HEREIN CONTAINED SHALL NOT BE USED FOR THE BENEFIT OF ANYONE EXCEPT SOLARCITY INC., NOR SHALL IT BE DISCLOSED IN WHOLE OR IN PART TO OTHERS OUTSIDE THE RECIPIENT'S ORGANIZATION, EXCEPT IN CONNECTION WITH THE SALE AND USE OF THE RESPECTIVE SOLARCITY EQUIPMENT, WITHOUT THE WRITTEN PERMISSION OF SOLARCITY INC.

JOB NUMBER: JB-087666 00

MOUNTING SYSTEM: Comp Mount Type C

MODULES: (33) REC # REC260PEZ

INVERTER: ABB # AURORA PVI-6000-OUTD-US-Z-A-RGM

PREMISE OWNER:
DUSZA, JONATHAN
12 HOLLYCREST DR
BRICK, NJ 08723

(908) 755-7855

DESCRIPTION:
DUSZA RESIDENCE
8.58 KW PV ARRAY

PAGE NAME:
SITE PLAN

DESIGN: Adria Weber

Adria McL Weber

SHEET: PV 3 REV: DATE: 7/21/2015

SolarCity
3055 Clearview Way
San Mateo, CA 94402
T:(650) 638-1028 F:(650) 638-1029
(888)-SOL-CITY (765-2489) www.solarcity.com

FAX 12/11/15
609-269-2166

Brick Township
401 Chambersbridge Rd
Brick, NJ 08723
(732) 262-1030

Subcode Official Review

Date: Wednesday, December 09, 2015

To: DUSZA, JONATHAN
12 HOLLYCREST DR
BRICK, NJ 08723

RE: Electrical Subcode
Block: 210.03 Lot: 8 Qual:
12 HOLLYCREST DR.
Permit Number: Control Number: C-15-006180
Last Submit Date: Tuesday, December 08, 2015

Dear DUSZA, JONATHAN,

Your request is hereby denied based upon the following infractions.

Provide proper sizes and description of equipment on technical application.

Sincerely,

Patrick Callahan, Subcode Official

CC:

RESUBMIT ✓

SUBCODES Elect

DATES 12/16/15

TOWNSHIP OF BRICK

OCEAN COUNTY, NEW JERSEY
401 CHAMBERS BRIDGE ROAD, BRICK, N.J. 08723

John G. Ducey, Mayor

Township Council:
Susan Lydecker - President
Jim Fozman – Vice President
Heather deJong
Bob Moore
Paul Mummolo
Marianna Pontoriero
Andrea Zapcic

Department of Land Use and Community Development-Engineering Department

732-262-1027
Fax: 732-262-2941

mkaczka@twp.brick.nj.us
www.twp.brick.nj.us

May 31, 2014

Jonathan Dusza
12 Hollycrest Drive
Brick, NJ 08723

Re: Compliance of a Substantially Damaged Structure
12 HOLLYCREST DR.
Block 210.03; Lot 8

Dear Jonathan Dusza:

The structure located at the above referenced property was deemed substantially damaged on 1/14/2013 as a result of floodwaters. As a result, an **As-Built** Flood Elevation Certificate that demonstrates full compliance with local ordinance and FEMA Flood Plain Regulations is required to remove this structure from the Township's Substantially Damaged Database.

I am in receipt of a Food Elevation Certificate provided for the structure dated 5/22/2014, as prepared by William T. Fiore, PLS, for the **Finished Construction.**

A review of this information has determined that the structure has been reconstructed at elevation 13.2, which is above the Preliminary Flood Insurance Rate Map Elevation of AE 7 and the one-foot of freeboard as required by Section 196 of the Township Code. This meets your elevation requirements and complies with the Preliminary Flood Insurance Rate Map designation.

Based upon the Finished Construction Food Elevation Certificate provided, a review for full compliance cannot be determined at this time.

This letter does not constitute a complete review for full compliance with FEMA Flood Plain Regulation.

If you should have any questions, comments or require any additional information, please do not hesitate to contact me. My email address is ecommins@twp.brick.nj.us or by phone at 732.262.1027.

Sincerely,

Elissa C. Commins, P.E.
Municipal Engineer, Flood Plain Manager

Cc: Daniel Newman, Construction Official

311 ACCESS BRICK TOWNSHIP

* * * Communication Result Report (Dec. 10. 2015 10:39AM) * * *

1)
2)

Date/Time: Dec. 10. 2015 10:32AM

File No.	Mode	Destination	Pg(s)	Result	Page Not Sent
1633	Memory TX	916092692166	P. 1	OK	

Reason for error
E. 1) Hang up or line fail
E. 2) Busy
E. 3) No answer
E. 4) No facsimile connection
E. 5) Exceeded max. E-mail size
E. 6) Destination does not support IP-Fax

Brick Township
401 Chambersbridge Rd
Brick, NJ 08723
(732) 262-1030

Subcode Official Review

Date: Wednesday, December 09, 2015

To: DUSZA, JONATHAN
12 HOLLYCREST DR
BRICK, NJ 08723

RE: Electrical Subcode
Block: 210.03 Lot: 8 Qual:
12 HOLLYCREST DR.
Permit Number: Control Number: C-15-006180
Last Submit Date: Tuesday, December 08, 2015

Dear DUSZA, JONATHAN,

Your request is hereby denied based upon the following infractions.

Provide proper sizes and description of equipment on technical application.

Sincerely,

Patrick Callahan, Subcode Official

CC:

NOT AN ELECTRICIAN'S OR PLUMBER'S LICENSE

State Of New Jersey
New Jersey Office of the Attorney General
Division of Consumer Affairs

THIS IS TO CERTIFY THAT THE
Division of Consumer Affairs

HAS REGISTERED

SOLARCITY CORPORATION
Lyndon Rive
3055 Clearview Way
San Mateo CA 94402

FOR PRACTICE IN NEW JERSEY AS A(N): Home Improvement Contractor

02/18/2015 TO 03/31/2016
VALID

13VH06160600
LICENSE/REGISTRATION/CERTIFICATION #

Signature of Licensee/Registrant/Certificate Holder

ACTING DIRECTOR

New Jersey Office of the Attorney General
Division of Consumer Affairs
THIS IS TO CERTIFY THAT THE
Division of Consumer Affairs
HAS REGISTERED
SOLARCITY CORPORATION
Home Improvement Contractor

NOT AN ELECTRICIAN'S OR PLUMBER'S LICENSE

02/18/2015 TO 03/31/2016
VALID

13VH06160600
License/Registration/Certificate #

SIGNATURE

ACTING DIRECTOR

PLEASE DETACH HERE

IF YOUR LICENSE/REGISTRATION/ CERTIFICATE ID CARD IS LOST PLEASE NOTIFY:
Division of Consumer Affairs
P.O. Box 46016
Newark, NJ 07101

PLEASE DETACH HERE

SOLARCITY CORPORATION

EXPIRATION DATE **2016**

YOUR LICENSE/REGISTRATION/CERTIFICATE NUMBER IS **13VH 06160600** . PLEASE USE IT IN ALL CORRESPONDENCE TO THE DIVISION OF CONSUMER AFFAIRS. USE THIS SECTION TO REPORT ADDRESS CHANGES. YOU ARE REQUIRED TO REPORT ANY ADDRESS CHANGES IMMEDIATELY TO THE ADDRESS NOTED BELOW.

Division of Consumer Affairs
P.O. Box 46016
Newark, NJ 07101

PRINT YOUR NEW **ADDRESS OF RECORD** BELOW.
YOUR ADDRESS OF RECORD IS THE ADDRESS THAT WILL PRINT ON YOUR LICENSE/REGISTRATION/CERTIFICATE AND IT MAY BE MADE AVAILABLE TO THE PUBLIC.

HOME ☐

BUSINESS ☐

TELEPHONE
INCLUDE AREA CODE

PRINT YOUR NEW **MAILING ADDRESS** BELOW.
YOUR MAILING ADDRESS IS THE ADDRESS THAT WILL BE USED BY THE DIVISION OF CONSUMER AFFAIRS TO SEND YOU ALL CORRESPONDENCE.

HOME ☐

BUSINESS ☐

TELEPHONE
INCLUDE AREA CODE

If the law governing your profession requires the current license/registration/certificate to be displayed, it should be within reasonable proximity of your original license/registration/certificate at your principal office or place of business.

FILE COPY

Version #48.2
WS

SolarCity

Zoning Review
Approval
By: cw Solar on roof
Date: 12-4-15

July 22, 2015

Project/Job # 087666
RE: CERTIFICATION LETTER

Project: Dusza Residence
12 Hollycrest Dr
Brick, NJ 08723

To Whom It May Concern,

A jobsite survey of the existing framing system was performed by a site survey team from SolarCity. Structural review was based on site observations and the design criteria listed below:

Design Criteria:

- Applicable Codes = NJ Edition of 2009 IBC/IRC, ASCE 7-05, and 2005 NDS
- Risk Category = II
- Wind Speed = 115 mph, Exposure Category C
- Ground Snow Load = 20 psf
- MP1 & 2 Lower: Roof DL = 13.5 psf, Roof LL/SL = 12 psf (Non-PV Areas), Roof LL/SL = 6 psf (PV Areas)
- MP1 & 2 Upper: Roof DL = 12.5 psf, Roof LL/SL = 12 psf (Non-PV Areas), Roof LL/SL = 6 psf (PV Areas)

Note: Per IBC 1613.1; Seismic check is not required because Ss = 0.25984 < 0.4g and Seismic Design Category (SDC) = B < D

On the above referenced project, the components of the structural roof framing impacted by the installation of the PV assembly have been reviewed. After this review it has been determined that the existing structure is adequate to withstand the applicable roof dead load, PV assembly load, and live/snow loads indicated in the design criteria above.

I certify that the structural roof framing and the new attachments that directly support the gravity loading and wind uplift loading from PV modules have been reviewed and determined to meet or exceed structural strength requirements of the NJ Edition of 2009 IBC/IRC.

Please contact me with any questions or concerns regarding this project.

TOWNSHIP OF BRICK
RELEASED FOR PERMIT INITIAL DATE
Building Subcode _____ 01/13/16
Plumbing Subcode _____
Fire Subcode _____
Electrical Subcode _____
Plan Reviewer _____
Plans Released
Construction Official

Sincerely,

Humphrey Kariuki, P.E.
Professional Engineer
T: 443.451.3515
email: hkariuki@gmail.com

FILE COPY

07.22.2015
Version #48.2

SolarCity PV System Structural Design Software

PROJECT INFORMATION & TABLE OF CONTENTS

Project Name:	Dusza Residence	AHJ:	Brick Township
Job Number:	087666	Building Code:	NJ Edition of 2009 IBC/IRC
Customer Name:	Dusza, Jonathan	Based On:	IRC 2009 / IBC 2009
Address:	12 Hollycrest Dr	ASCE Code:	ASCE 7-05
City/State:	Brick, NJ	Risk Category:	II
Zip Code	08723	Upgrades Req'd?	No
Latitude / Longitude:	40.026002 -74.099723	Stamp Req'd?	Yes
SC Office:	Cranbury	PV Designer:	Adria Weber

Certification Letter	1
Project Information, Table Of Contents, & Vicinity Map	2
Structure Analysis (Loading Summary and Member Check)	3
Hardware Design (PV System Assembly)	4

Note: Per IBC 1613.1; Seismic check is not required because Ss = 0.25984 < 0.4g and Seismic Design Category (SDC) = B < D

1/2-MILE VICINITY MAP

12 Hollycrest Dr, Brick, NJ 08723
Latitude: 40.026002, Longitude: -74.099723, Exposure Category: C

STRUCTURE ANALYSIS - LOADING SUMMARY AND MEMBER CHECK - MP1 & 2 LOWER

Member Properties Summary					
MP1 & 2 LOWER		Horizontal Member Spans		Rafter Properties	
		Overhang	0.41 ft	Actual W	1.50"
Roof System Properties		Span 1	8.66 ft	Actual D	7.25"
Number of Spans (w/o Overhang)	1	Span 2		Nominal	Yes
Roofing Material	Comp Roof	Span 3		A	10.88 in.^2
Re-Roof	No	Span 4		S_x	13.14 in.^3
Plywood Sheathing	Yes	Span 5		I_x	47.63 in.^4
Board Sheathing	None	Total Span	9.07 ft	TL Defl'n Limit	120
Vaulted Ceiling	Yes	PV 1 Start	2.83 ft	Wood Species	SPF
Ceiling Finish	1/2" Gypsum Board	PV 1 End	12.00 ft	Wood Grade	#2
Rafter Slope	45°	PV 2 Start		F_b	875 psi
Rafter Spacing	16" O.C.	PV 2 End		F_v	135 psi
Top Lat Bracing	Full	PV 3 Start		E	1400000 psi
Bot Lat Bracing	Full	PV 3 End		E_{min}	510000 psi

Member Loading Summary					
Roof Pitch	12/12	Initial	Pitch Adjust	Non-PV Areas	PV Areas
Roof Dead Load	DL	13.5 psf	x 1.41	19.1 psf	19.1 psf
PV Dead Load	PV-DL	3.0 psf	x 1.41		4.2 psf
Roof Live Load	RLL	20.0 psf	x 0.60	12.0 psf	
Live/Snow Load	LL/SL[1,2]	20.0 psf	x 0.54 | x 0.3	10.8 psf	6.0 psf
Total Load (Governing LC)	TL			29.9 psf	29.3 psf

Notes: 1. ps = Cs*pf; Cs -roof, Cs -pv per ASCE 7 [Figure 7-2] 2. pf = 0.7 (C_e) (C_t) (I_s) p_g ; C_e=0.9, C_t=1.1, I_s=1.0

Member Design Summary (per NDS)					
Governing Load Comb	CD	CL (+)	CL (-)	CF	Cr
D + S	1.15	1.00	1.00	1.2	1.15

Member Analysis Results Summary					
Maximum	Max Demand	@ Location	Capacity	DCR	Load Combo
Shear Stress	17 psi	0.4 ft.	155 psi	0.11	D + S
Bending (+) Stress	333 psi	4.8 ft.	1389 psi	**0.24**	**D + S**
Bending (-) Stress	-6 psi	0.4 ft.	-1389 psi	0.00	D + S
Total Load Deflection	0.15 in. | L/998	4.7 ft.	1.22 in. | L/120	0.12	D + S

CALCULATION OF DESIGN WIND LOADS - MP1 & 2 LOWER

Mounting Plane Information			
Roofing Material		Comp Roof	
PV System Type		SolarCity SleekMount™	
Spanning Vents		No	
Standoff (Attachment Hardware)		Comp Mount Type C	
Roof Slope		45°	
Rafter Spacing		16" O.C.	
Framing Type / Direction		Y-Y Rafters	
Purlin Spacing	X-X Purlins Only	NA	
Tile Reveal	Tile Roofs Only	NA	
Tile Attachment System	Tile Roofs Only	NA	
Standing Seam/Trap Spacing	SM Seam Only	NA	

Wind Design Criteria			
Wind Design Code		ASCE 7-05	
Wind Design Method		Partially/Fully Enclosed Method	
Basic Wind Speed	V	115 mph	Fig. 6-1
Exposure Category		C	Section 6.5.6.3
Roof Style		Gable Roof	Fig. 6-11B/C/D-14A/B
Mean Roof Height	h	25 ft	Section 6.2

Wind Pressure Calculation Coefficients			
Wind Pressure Exposure	K_z	0.95	Table 6-3
Topographic Factor	K_{zt}	1.00	Section 6.5.7
Wind Directionality Factor	K_d	0.85	Table 6-4
Importance Factor	I	1.0	Table 6-1
Velocity Pressure	q_h	**qh = 0.00256 (Kz) (Kzt) (Kd) (V^2) (I) 27.2 psf**	**Equation 6-15**

		Wind Pressure	
Ext. Pressure Coefficient (Up)	$GC_{p\ (Up)}$	-0.95	Fig. 6-11B/C/D-14A/B
Ext. Pressure Coefficient (Down)	$GC_{p\ (Down)}$	0.88	Fig. 6-11B/C/D-14A/B
Design Wind Pressure	p	$p = q_h (GC_p)$	Equation 6-22
Wind Pressure Up	$p_{(up)}$	**-25.8 psf**	
Wind Pressure Down	$p_{(down)}$	**23.8 psf**	

ALLOWABLE STANDOFF SPACINGS

		X-Direction	Y-Direction
Max Allowable Standoff Spacing	Landscape	64"	39"
Max Allowable Cantilever	Landscape	24"	NA
Standoff Configuration	Landscape	Staggered	
Max Standoff Tributary Area	Trib	17 sf	
PV Assembly Dead Load	W-PV	3.0 psf	
Net Wind Uplift at Standoff	T-actual	-426 lbs	
Uplift Capacity of Standoff	T-allow	500 lbs	
Standoff Demand/Capacity	DCR	85.2%	

		X-Direction	Y-Direction
Max Allowable Standoff Spacing	Portrait	32"	66"
Max Allowable Cantilever	Portrait	15"	NA
Standoff Configuration	Portrait	Staggered	
Max Standoff Tributary Area	Trib	15 sf	
PV Assembly Dead Load	W-PV	3.0 psf	
Net Wind Uplift at Standoff	T-actual	-358 lbs	
Uplift Capacity of Standoff	T-allow	500 lbs	
Standoff Demand/Capacity	DCR	71.6%	

STRUCTURE ANALYSIS - LOADING SUMMARY AND MEMBER CHECK - MP1 & 2 UPPER

Member Properties Summary					
MP1 & 2 UPPER		Horizontal Member Spans		Rafter Properties	
		Overhang		Actual W	1.50"
Roof System Properties		Span 1	4.33 ft	Actual D	3.50"
Number of Spans (w/o Overhang)	1	Span 2		Nominal	Yes
Roofing Material	Comp Roof	Span 3		A	5.25 in.^2
Re-Roof	No	Span 4		S_x	3.06 in.^3
Plywood Sheathing	Yes	Span 5		I_x	5.36 in.^4
Board Sheathing	None	Total Span	4.33 ft	TL Defl'n Limit	120
Vaulted Ceiling	Yes	PV 1 Start	3.25 ft	Wood Species	SPF
Ceiling Finish	1/2" Gypsum Board	PV 1 End	4.25 ft	Wood Grade	#2
Rafter Slope	45°	PV 2 Start		F_b	875 psi
Rafter Spacing	16" O.C.	PV 2 End		F_v	135 psi
Top Lat Bracing	Full	PV 3 Start		E	1400000 psi
Bot Lat Bracing	Full	PV 3 End		E_{min}	510000 psi

Member Loading Summary					
Roof Pitch	12/12	Initial	Pitch Adjust	Non-PV Areas	PV Areas
Roof Dead Load	DL	12.5 psf	x 1.41	17.7 psf	17.7 psf
PV Dead Load	PV-DL	3.0 psf	x 1.41		4.2 psf
Roof Live Load	RLL	20.0 psf	x 0.60	12.0 psf	
Live/Snow Load	LL/SL[1,2]	20.0 psf	x 0.54 | x 0.3	10.8 psf	6.0 psf
Total Load (Governing LC)	TL			17.7 psf	21.9 psf

Notes: 1. ps = Cs*pf; Cs -roof, Cs -pv per ASCE 7 [Figure 7-2] 2. pf = 0.7 (C_e) (C_t) (I_s) p_g ; C_e=0.9, C_t=1.1, I_s=1.0

Member Design Summary (per NDS)					
Governing Load Comb	CD	CL (+)	CL (-)	CF	Cr
D	0.9	1.00	1.00	1.5	1.15

Member Analysis Results Summary					
Maximum	Max Demand	@ Location	Capacity	DCR	Load Combo
Shear Stress	10 psi	4.3 ft.	122 psi	0.08	D + S
Bending (+) Stress	222 psi	2.2 ft.	1358 psi	**0.16**	D
Bending (-) Stress	-1 psi	4.3 ft.	-1358 psi	0.00	D + S
Total Load Deflection	0.05 in. | L/1438	2.2 ft.	0.61 in. | L/120	0.08	D + S

CALCULATION OF DESIGN WIND LOADS - MP1 & 2 UPPER

Mounting Plane Information			
Roofing Material		Comp Roof	
PV System Type		SolarCity SleekMount™	
Spanning Vents		No	
Standoff (Attachment Hardware)		Comp Mount Type C	
Roof Slope		45°	
Rafter Spacing		16" O.C.	
Framing Type / Direction		Y-Y Rafters	
Purlin Spacing	X-X Purlins Only	NA	
Tile Reveal	Tile Roofs Only	NA	
Tile Attachment System	Tile Roofs Only	NA	
Standing Seam/Trap Spacing	SM Seam Only	NA	

Wind Design Criteria			
Wind Design Code		ASCE 7-05	
Wind Design Method		Partially/Fully Enclosed Method	
Basic Wind Speed	V	115 mph	Fig. 6-1
Exposure Category		C	Section 6.5.6.3
Roof Style		Gable Roof	Fig. 6-11B/C/D-14A/B
Mean Roof Height	h	25 ft	Section 6.2

Wind Pressure Calculation Coefficients			
Wind Pressure Exposure	K_z	0.95	Table 6-3
Topographic Factor	K_{zt}	1.00	Section 6.5.7
Wind Directionality Factor	K_d	0.85	Table 6-4
Importance Factor	I	1.0	Table 6-1
Velocity Pressure	q_h	**qh = 0.00256 (Kz) (Kzt) (Kd) (V^2) (I) 27.2 psf**	**Equation 6-15**

		Wind Pressure	
Ext. Pressure Coefficient (Up)	$GC_{p\ (Up)}$	-0.95	Fig. 6-11B/C/D-14A/B
Ext. Pressure Coefficient (Down)	$GC_{p\ (Down)}$	0.88	Fig. 6-11B/C/D-14A/B
Design Wind Pressure	p	$p = q_h (GC_p)$	Equation 6-22
Wind Pressure Up	$p_{(up)}$	**-25.8 psf**	
Wind Pressure Down	$p_{(down)}$	**23.8 psf**	

ALLOWABLE STANDOFF SPACINGS

		X-Direction	Y-Direction
Max Allowable Standoff Spacing	Landscape	64"	39"
Max Allowable Cantilever	Landscape	24"	NA
Standoff Configuration	Landscape	Staggered	
Max Standoff Tributary Area	Trib	17 sf	
PV Assembly Dead Load	W-PV	3.0 psf	
Net Wind Uplift at Standoff	T-actual	-426 lbs	
Uplift Capacity of Standoff	T-allow	500 lbs	
Standoff Demand/Capacity	DCR	85.2%	

		X-Direction	Y-Direction
Max Allowable Standoff Spacing	Portrait	32"	66"
Max Allowable Cantilever	Portrait	15"	NA
Standoff Configuration	Portrait	Staggered	
Max Standoff Tributary Area	Trib	15 sf	
PV Assembly Dead Load	W-PV	3.0 psf	
Net Wind Uplift at Standoff	T-actual	-358 lbs	
Uplift Capacity of Standoff	T-allow	500 lbs	
Standoff Demand/Capacity	DCR	71.6%	

ABBREVIATIONS

A	AMPERE
AC	ALTERNATING CURRENT
BLDG	BUILDING
CONC	CONCRETE
DC	DIRECT CURRENT
EGC	EQUIPMENT GROUNDING CONDUCTOR
(E)	EXISTING
EMT	ELECTRICAL METALLIC TUBING
FSB	FIRE SET-BACK
GALV	GALVANIZED
GEC	GROUNDING ELECTRODE CONDUCTOR
GND	GROUND
HDG	HOT DIPPED GALVANIZED
I	CURRENT
Imp	CURRENT AT MAX POWER
Isc	SHORT CIRCUIT CURRENT
kVA	KILOVOLT AMPERE
kW	KILOWATT
LBW	LOAD BEARING WALL
MIN	MINIMUM
(N)	NEW
NEUT	NEUTRAL
NTS	NOT TO SCALE
OC	ON CENTER
PL	PROPERTY LINE
POI	POINT OF INTERCONNECTION
PV	PHOTOVOLTAIC
SCH	SCHEDULE
S	STAINLESS STEEL
STC	STANDARD TESTING CONDITIONS
TYP	TYPICAL
UPS	UNINTERRUPTIBLE POWER SUPPLY
V	VOLT
Vmp	VOLTAGE AT MAX POWER
Voc	VOLTAGE AT OPEN CIRCUIT
W	WATT
3R	NEMA 3R, RAINTIGHT

ELECTRICAL NOTES

1. THIS SYSTEM IS GRID-INTERTIED VIA A UL-LISTED POWER-CONDITIONING INVERTER.
2. THIS SYSTEM HAS NO BATTERIES, NO UPS.
3. A NATIONALLY-RECOGNIZED TESTING LABORATORY SHALL LIST ALL EQUIPMENT IN COMPLIANCE WITH ART. 110.3.
4. WHERE ALL TERMINALS OF THE DISCONNECTING MEANS MAY BE ENERGIZED IN THE OPEN POSITION, A SIGN WILL BE PROVIDED WARNING OF THE HAZARDS PER ART. 690.17.
5. EACH UNGROUNDED CONDUCTOR OF THE MULTIWIRE BRANCH CIRCUIT WILL BE IDENTIFIED BY PHASE AND SYSTEM PER ART. 210.5.
6. CIRCUITS OVER 250V TO GROUND SHALL COMPLY WITH ART. 250.97, 250.92(B).
7. DC CONDUCTORS EITHER DO NOT ENTER BUILDING OR ARE RUN IN METALLIC RACEWAYS OR ENCLOSURES TO THE FIRST ACCESSIBLE DC DISCONNECTING MEANS PER ART. 690.31(E).
8. ALL WIRES SHALL BE PROVIDED WITH STRAIN RELIEF AT ALL ENTRY INTO BOXES AS REQUIRED BY UL LISTING.
9. MODULE FRAMES SHALL BE GROUNDED AT THE UL-LISTED LOCATION PROVIDED BY THE MANUFACTURER USING UL LISTED GROUNDING HARDWARE.
10. MODULE FRAMES, RAIL, AND POSTS SHALL BE BONDED WITH EQUIPMENT GROUND CONDUCTORS.

JURISDICTION NOTES

Zoning Review
Approval
By: CN Solar on roof
Date: 12-4-15

LICENSE

MODULE GROUNDING METHOD: ZEP SOLAR

AHJ: Brick Township

UTILITY: First Energy (Jersey Central Power & Light)

GENERAL NOTES

1. ALL WORK SHALL COMPLY WITH THE 2009 IRC NJ EDITION.
2. ALL ELECTRICAL WORK SHALL COMPLY WITH THE 2011 NATIONAL ELECTRIC CODE.

VICINITY MAP

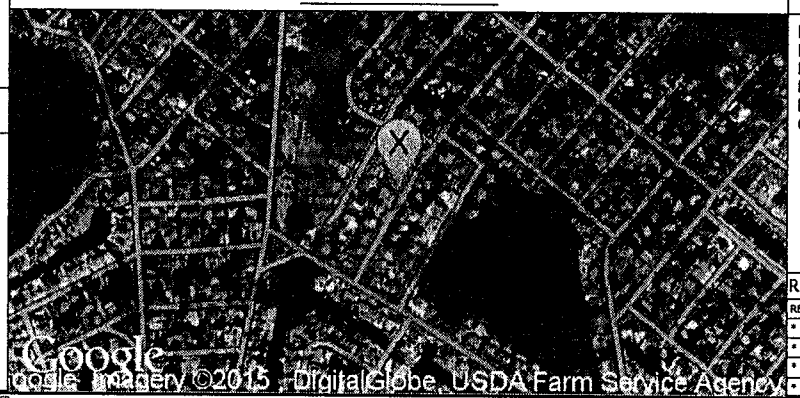

INDEX

PV1 COVER SHEET
PV2 PROPERTY PLAN
PV3 SITE PLAN
PV4 STRUCTURAL VIEWS
PV5 THREE LINE DIAGRAM
Cutsheets Attached

REV BY DATE COMMENTS

REV A	NAME	DATE	COMMENTS
*	*	*	*
*	*	*	*
*	*	*	*
*	*	*	*

CONFIDENTIAL – THE INFORMATION HEREIN CONTAINED SHALL NOT BE USED FOR THE BENEFIT OF ANYONE EXCEPT SOLARCITY INC., NOR SHALL IT BE DISCLOSED IN WHOLE OR IN PART TO OTHERS OUTSIDE THE RECIPIENT'S ORGANIZATION, EXCEPT IN CONNECTION WITH THE SALE AND USE OF THE RESPECTIVE SOLARCITY EQUIPMENT, WITHOUT THE WRITTEN PERMISSION OF SOLARCITY INC.

JOB NUMBER: JB-087666 00
MOUNTING SYSTEM: Comp Mount Type C
MODULES: (33) REC # REC260PEZ
INVERTER: ABB # AURORA PVI-6000-OUTD-US-Z-A-RGM

PREMISE OWNER:
DUSZA, JONATHAN
12 HOLLYCREST DR
BRICK, NJ 08723
APN: *
(908) 755-7855

DESCRIPTION:
DUSZA RESIDENCE
8.58 KW PV ARRAY
TMK OWNER: *

PAGE NAME:
COVER SHEET

DESIGN:
Adria Weber
Adria McL Weber

SHEET: PV 1 REV: DATE: 7/21/2015

SolarCity
3055 Clearview Way
San Mateo, CA 94402
T:(650) 638-1028 F:(650) 638-1029
(888)-SOL-CITY (765-2489) www.solarcity.com

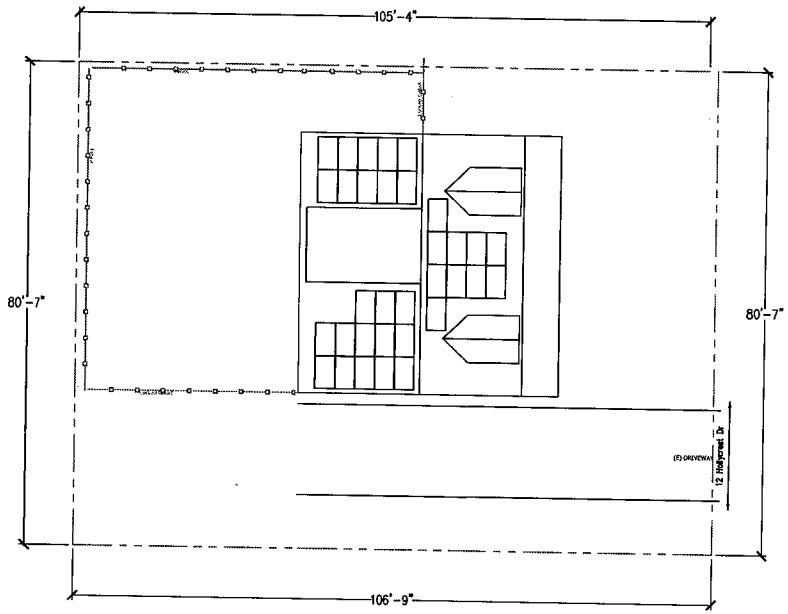

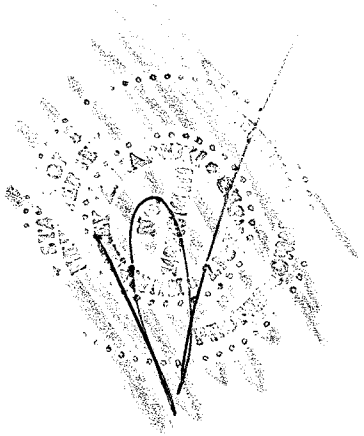

PROPERTY PLAN

Scale: 1" = 20'-0"

0 20' 40'

N E S W

CONFIDENTIAL – THE INFORMATION HEREIN CONTAINED SHALL NOT BE USED FOR THE BENEFIT OF ANYONE EXCEPT SOLARCITY INC., NOR SHALL IT BE DISCLOSED IN WHOLE OR IN PART TO OTHERS OUTSIDE THE RECIPIENT'S ORGANIZATION, EXCEPT IN CONNECTION WITH THE SALE AND USE OF THE RESPECTIVE SOLARCITY EQUIPMENT, WITHOUT THE WRITTEN PERMISSION OF SOLARCITY INC.

JOB NUMBER: JB-087666 00

MOUNTING SYSTEM: Comp Mount Type C

MODULES: (33) REC # REC260PEZ

INVERTER: ABB # AURORA PVI-6000-OUTD-US-Z-A-RGM

PREMISE OWNER:
DUSZA, JONATHAN
12 HOLLYCREST DR
BRICK, NJ 08723

(908) 755-7855

DESCRIPTION:
DUSZA RESIDENCE
8.58 KW PV ARRAY

PAGE NAME:
PROPERTY PLAN

DESIGN: Adria Weber

Adria M. Weber

SHEET: PV 2 REV: DATE: 7/21/2015

SolarCity
3055 Clearview Way
San Mateo, CA 94402
T:(650) 638-1028 F:(650) 638-1029
(888)-SOL-CITY (765-2489) www.solarcity.com

MP1	PITCH: 45 AZIMUTH: 120 MATERIAL: Comp Shingle	ARRAY PITCH: 45 ARRAY AZIMUTH: 120 STORY: 2 Stories
MP2	PITCH: 45 AZIMUTH: 300 MATERIAL: Comp Shingle	ARRAY PITCH: 45 ARRAY AZIMUTH: 300 STORY: 2 Stories

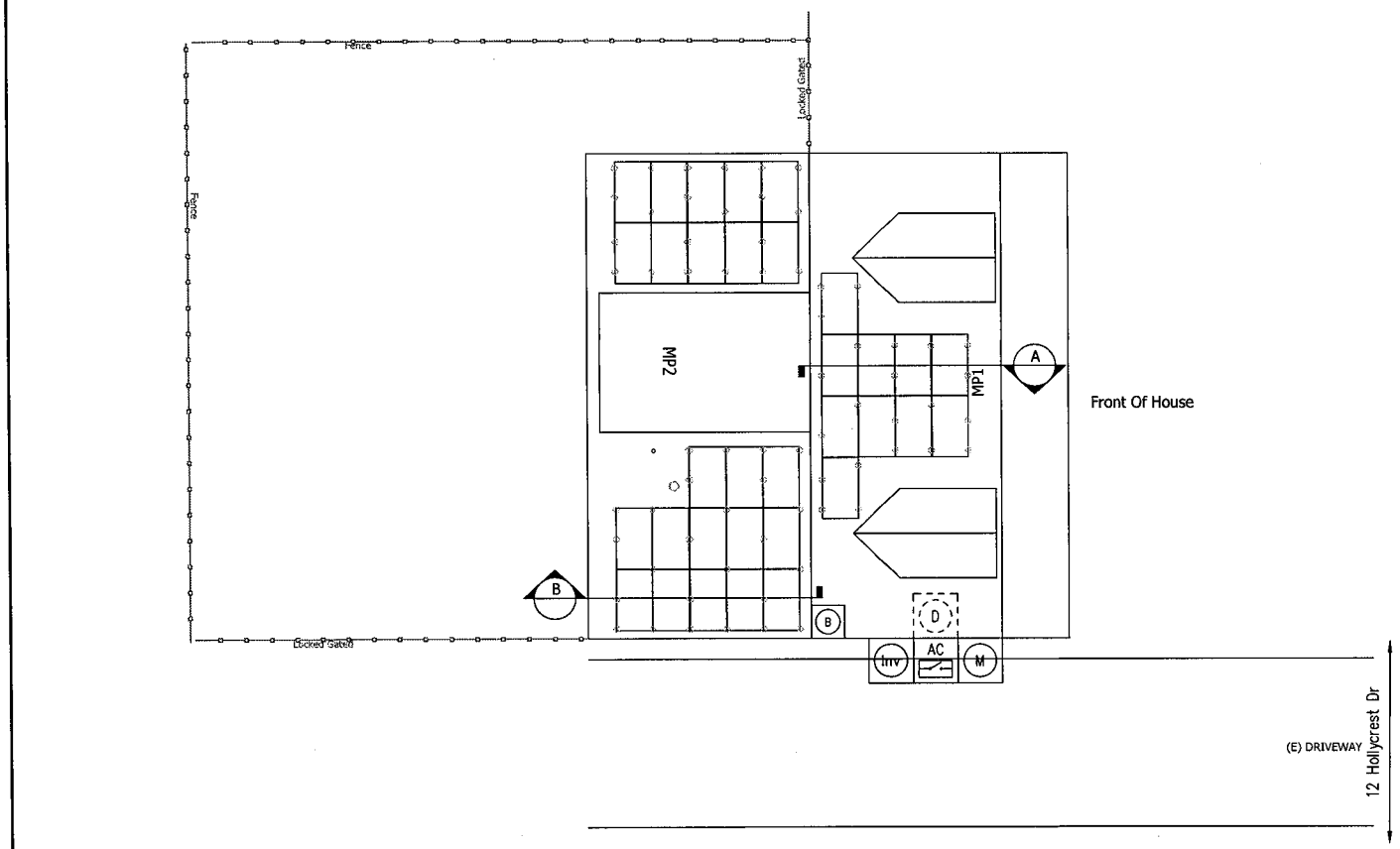

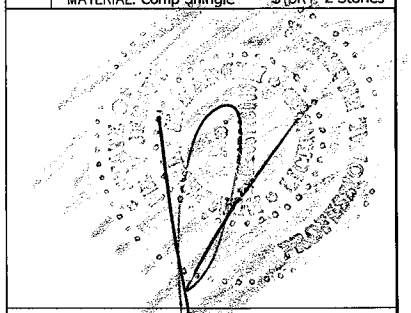

LEGEND

- (M) (E) UTILITY METER & WARNING LABEL
- (Inv) INVERTER W/ INTEGRATED DC DISCO & WARNING LABELS
- (DC) DC DISCONNECT & WARNING LABELS
- (AC) AC DISCONNECT & WARNING LABELS
- (B) DC JUNCTION/COMBINER BOX & LABELS
- (D) DISTRIBUTION PANEL & LABELS
- (LC) LOAD CENTER & WARNING LABELS
- (M) DEDICATED PV SYSTEM METER
- STANDOFF LOCATIONS
- CONDUIT RUN ON EXTERIOR
- CONDUIT RUN ON INTERIOR
- GATE/FENCE
- HEAT PRODUCING VENTS ARE RED
- INTERIOR EQUIPMENT IS DASHED

SITE PLAN

Scale: 3/32" = 1'

0 1' 10' 21'

N E S W

CONFIDENTIAL – THE INFORMATION HEREIN CONTAINED SHALL NOT BE USED FOR THE BENEFIT OF ANYONE EXCEPT SOLARCITY INC., NOR SHALL IT BE DISCLOSED IN WHOLE OR IN PART TO OTHERS OUTSIDE THE RECIPIENT'S ORGANIZATION, EXCEPT IN CONNECTION WITH THE SALE AND USE OF THE RESPECTIVE SOLARCITY EQUIPMENT, WITHOUT THE WRITTEN PERMISSION OF SOLARCITY INC.

JOB NUMBER: JB-087666 00

MOUNTING SYSTEM: Comp Mount Type C

MODULES: (33) REC # REC260PEZ

INVERTER: ABB # AURORA PVI-6000-OUTD-US-Z-A-RGM

PREMISE OWNER:
DUSZA, JONATHAN
12 HOLLYCREST DR
BRICK, NJ 08723

(908) 755-7855

DESCRIPTION:
DUSZA RESIDENCE
8.58 KW PV ARRAY

PAGE NAME:
SITE PLAN

DESIGN: Adria Weber

Adria M. Weber

SHEET: PV 3 REV: DATE: 7/21/2015

SolarCity
3055 Clearview Way
San Mateo, CA 94402
T:(650) 638-1028 F:(650) 638-1029
(888)-SOL-CITY (765-2489) www.solarcity.com

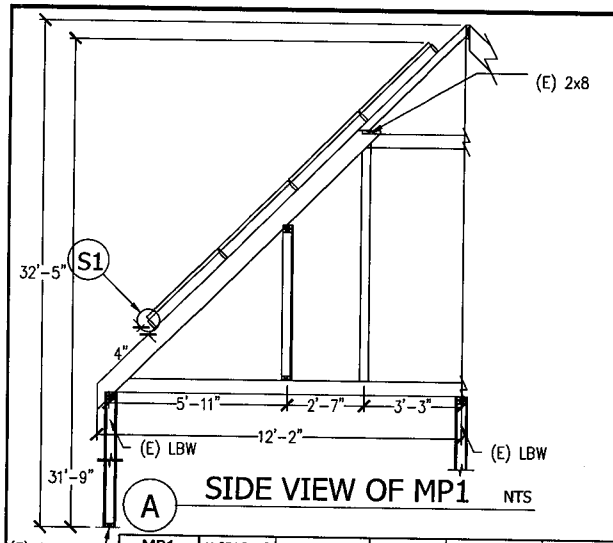

A SIDE VIEW OF MP1 NTS

MP1	X-SPACING	X-CANTILEVER	Y-SPACING	Y-CANTILEVER	NOTES
LANDSCAPE	64"	24"			STAGGERED
PORTRAIT					
RAFTER	2x4/2x8 @ 16" OC		ROOF AZI 120 PITCH 45		STORIES: 2
C.J.	2x6 @16" OC		ARRAY AZI 120 PITCH 45		
			Comp Shingle		

*X-Spacing is the spacing of standoffs parallel to the ridge.

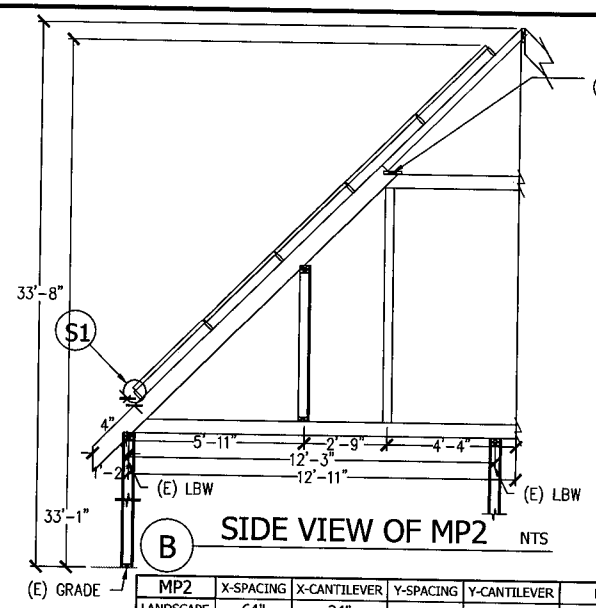

B SIDE VIEW OF MP2 NTS

MP2	X-SPACING	X-CANTILEVER	Y-SPACING	Y-CANTILEVER	NOTES
LANDSCAPE	64"	24"			STAGGERED
PORTRAIT					
RAFTER	2x4/2x8 @ 16" OC		ROOF AZI 300 PITCH 45		STORIES: 2
C.J.	2x6 @16" OC		ARRAY AZI 300 PITCH 45		
			Comp Shingle		

*X-Spacing is the spacing of standoffs parallel to the ridge.

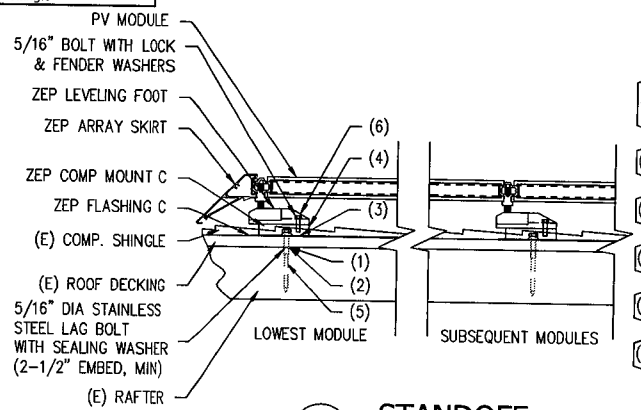

INSTALLATION ORDER	
(1)	LOCATE RAFTER, MARK HOLE LOCATION, AND DRILL PILOT HOLE.
(2)	SEAL PILOT HOLE WITH POLYURETHANE SEALANT.
(3)	INSERT FLASHING.
(4)	PLACE MOUNT.
(5)	INSTALL LAG BOLT WITH SEALING WASHER.
(6)	INSTALL LEVELING FOOT WITH BOLT & WASHERS.

S1 STANDOFF
Scale: 1 1/2" = 1'

CONFIDENTIAL - THE INFORMATION HEREIN CONTAINED SHALL NOT BE USED FOR THE BENEFIT OF ANYONE EXCEPT SOLARCITY INC., NOR SHALL IT BE DISCLOSED IN WHOLE OR IN PART TO OTHERS OUTSIDE THE RECIPIENT'S ORGANIZATION, EXCEPT IN CONNECTION WITH THE SALE AND USE OF THE RESPECTIVE SOLARCITY EQUIPMENT, WITHOUT THE WRITTEN PERMISSION OF SOLARCITY INC.

JOB NUMBER: JB-087666 00
MOUNTING SYSTEM: Comp Mount Type C
MODULES: (33) REC # REC260PEZ
INVERTER: ABB # AURORA PVI-6000-OUTD-US-Z-A-RGM

PREMISE OWNER:
DUSZA, JONATHAN
12 HOLLYCREST DR
BRICK, NJ 08723
(908) 755-7855

DESCRIPTION:
DUSZA RESIDENCE
8.58 KW PV ARRAY

PAGE NAME:
STRUCTURAL VIEWS

DESIGN:
Adria Weber
Adria M. Weber

SHEET: PV 4 REV: DATE: 7/21/2015

SolarCity
3055 Clearview Way
San Mateo, CA 94402
T:(650) 638-1028 F:(650) 638-1029
(888)-SOL-CITY (765-2489) www.solarcity.com

GROUND SPECS	MAIN PANEL SPECS	GENERAL NOTES	INVERTER SPECS	MODULE SPECS	LICENSE
BOND (N) #8 GEC TO (N) GROUND ROD AT PANEL WITH IRREVERSIBLE CRIMP	Panel Number: A4040B1200 Meter Number: S 3120 599 07 Overhead Service Entrance	Inv 1: DC Ungrounded	INV 1 — (1) ABB # AURORA PVI-6000-OUTD-US-Z-A-RGM LABEL: A Inverter; Zigbee 6000W, 277V/240V/208V, 96.5%/96.5%/96%	— (33) REC # REC260PEZ PV Module; 260W, 236.6W PTC, MC4, 40mm, Black Frame, ZEP Enabled Voc: 37.8 Vpmax: 30.7 Isc AND Imp ARE SHOWN IN THE DC STRINGS IDENTIFIER	
			INV 2		
			INV 3		

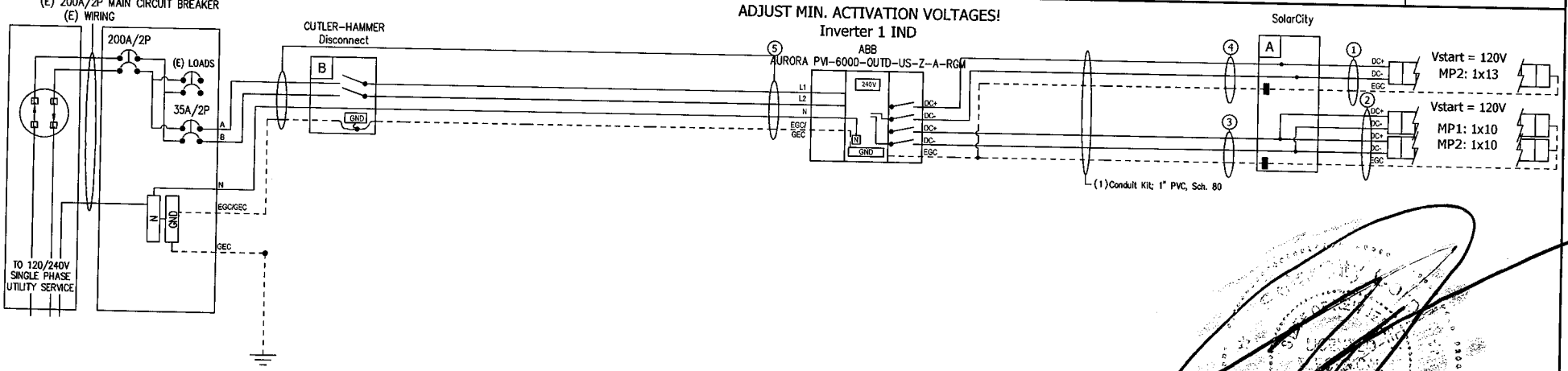

Voc* = MAX VOC AT MIN TEMP

POI
— (1) SIEMENS # Q235 PV BACKFEED BREAKER Breaker; 35A/2P, 2 Spaces
— (1) Ground Rod; 5/8" x 8', Copper

B — (1) CUTLER-HAMMER # DG222URB Disconnect; 60A, 240Vac, Non-Fusible, NEMA 3R
— (1) CUTLER-HAMMER # DG100NB Ground/Neutral Kit; 60-100A, General Duty (DG)

AC

5 — HOT
— (1) AWG #8, THWN-2, Black
— (1) AWG #8, THWN-2, Red
— (1) AWG #10, THWN-2, White NEUTRAL Vmp = 240 VAC Imp= 28 AAC
— (1) AWG #8, THWN-2, Green EGC/GEC — (1) Conduit Kit; 1" PVC, Sch. 80

3 — HOT
— (1) AWG #10, THWN-2, Black Voc* = 417.8 VDC Isc = 18.02 ADC
— (1) AWG #10, THWN-2, Red Vmp = 307 VDC Imp= 17 ADC
— (1) AWG #10, THWN-2, Green EGC

4 — HOT
— (1) AWG #10, THWN-2, Black Voc* = 543.14 VDC Isc = 9.01 ADC
— (1) AWG #10, THWN-2, Red Vmp = 399.1 VDC Imp= 8.5 ADC
— (1) AWG #10, THWN-2, Green EGC

A — (1) SolarCity # 4 STRING JUNCTION BOX 2x2 STRINGS, UNFUSED, GROUNDED

DC

1 — HOT
— (2) AWG #10, PV Wire, 600V, Black Voc* = 543.14 VDC Isc = 9.01 ADC
— (1) AWG #6, Solid Bare Copper EGC Vmp = 399.1 VDC Imp= 8.5 ADC

2 — HOT
— (4) AWG #10, PV Wire, 600V, Black Voc* = 417.8 VDC Isc = 9.01 ADC
— (1) AWG #6, Solid Bare Copper EGC Vmp = 307 VDC Imp= 8.5 ADC

CONFIDENTIAL – THE INFORMATION HEREIN CONTAINED SHALL NOT BE USED FOR THE BENEFIT OF ANYONE EXCEPT SOLARCITY INC., NOR SHALL IT BE DISCLOSED IN WHOLE OR IN PART TO OTHERS OUTSIDE THE RECIPIENT'S ORGANIZATION, EXCEPT IN CONNECTION WITH THE SALE AND USE OF THE RESPECTIVE SOLARCITY EQUIPMENT, WITHOUT THE WRITTEN PERMISSION OF SOLARCITY INC.

JOB NUMBER: JB-087666 00
MOUNTING SYSTEM: Comp Mount Type C
MODULES: (33) REC # REC260PEZ
INVERTER: ABB # AURORA PVI-6000-OUTD-US-Z-A-RGM

PREMISE OWNER:
DUSZA, JONATHAN
12 HOLLYCREST DR
BRICK, NJ 08723
(908) 755-7855

DESCRIPTION:
DUSZA RESIDENCE
8.58 KW PV ARRAY

PAGE NAME:
THREE LINE DIAGRAM

DESIGN: Adria Weber
Adria M. Weber

SHEET: PV 5 REV: DATE: 7/21/2015

SolarCity
3055 Clearview Way
San Mateo, CA 94402
T:(650) 638-1028 F:(650) 638-1029
(888)-SOL-CITY (765-2489) www.solarcity.com

WARNING: PHOTOVOLTAIC POWER SOURCE

Label Location:
(C)(CB)
Per Code:
NEC 690.31.G.3

PHOTOVOLTAIC DC DISCONNECT

Label Location:
(DC) (INV)
Per Code:
NEC 690.14.C.2

MAXIMUM POWER-POINT CURRENT (Imp) ___ A
MAXIMUM POWER-POINT VOLTAGE (Vmp) ___ V
MAXIMUM SYSTEM VOLTAGE (Voc) ___ V
SHORT-CIRCUIT CURRENT (Isc) ___ A

Label Location:
(DC) (INV)
Per Code:
NEC 690.53

WARNING
ELECTRIC SHOCK HAZARD
IF A GROUND FAULT IS INDICATED
NORMALLY GROUNDED
CONDUCTORS MAY BE
UNGROUNDED AND ENERGIZED

Label Location:
(DC) (INV)
Per Code:
NEC 690.5(C)

WARNING
ELECTRICAL SHOCK HAZARD
DO NOT TOUCH TERMINALS
TERMINALS ON BOTH LINE AND
LOAD SIDES MAY BE ENERGIZED
IN THE OPEN POSITION
DC VOLTAGE IS
ALWAYS PRESENT WHEN
SOLAR MODULES ARE
EXPOSED TO SUNLIGHT

Label Location:
(DC) (CB)
Per Code:
NEC 690.17(4)

PHOTOVOLTAIC AC DISCONNECT

Label Location:
(AC) (POI)
Per Code:
NEC 690.14.C.2

MAXIMUM AC OPERATING CURRENT ___ A
MAXIMUM AC OPERATING VOLTAGE ___ V

Label Location:
(AC) (POI)
Per Code:
NEC 690.54

WARNING
ELECTRIC SHOCK HAZARD
DO NOT TOUCH TERMINALS
TERMINALS ON BOTH LINE AND
LOAD SIDES MAY BE ENERGIZED
IN THE OPEN POSITION

Label Location:
(AC)(POI)
Per Code:
NEC 690.17.E

PHOTOVOLTAIC POINT OF INTERCONNECTION
WARNING: ELECTRIC SHOCK HAZARD. DO NOT TOUCH TERMINALS. TERMINALS ON BOTH THE LINE AND LOAD SIDE MAY BE ENERGIZED IN THE OPEN POSITION. FOR SERVICE DE-ENERGIZE BOTH SOURCE AND MAIN BREAKER.
PV POWER SOURCE
MAXIMUM AC OPERATING CURRENT ___ A
MAXIMUM AC OPERATING VOLTAGE ___ V

Label Location:
(POI)
Per Code:
NEC 690.17.4; NEC 690.54

CAUTION
DUAL POWER SOURCE
SECOND SOURCE IS
PHOTOVOLTAIC SYSTEM

Label Location:
(POI)
Per Code:
NEC 690.64.B.4

CAUTION
PHOTOVOLTAIC SYSTEM
CIRCUIT IS BACKFED

Label Location:
(D) (POI)
Per Code:
NEC 690.64.B.4

WARNING
INVERTER OUTPUT
CONNECTION
DO NOT RELOCATE
THIS OVERCURRENT
DEVICE

Label Location:
(POI)
Per Code:
NEC 690.64.B.7

WARNING
ELECTRIC SHOCK HAZARD
THE DC CONDUCTORS OF THIS
PHOTOVOLTAIC SYSTEM ARE
UNGROUNDED AND
MAY BE ENERGIZED

Label Location:
(DC) (INV)
Per Code:
NEC 690.35(F)
TO BE USED WHEN
INVERTER IS
UNGROUNDED

(AC): AC Disconnect
(C): Conduit
(CB): Combiner Box
(D): Distribution Panel
(DC): DC Disconnect
(IC): Interior Run Conduit
(INV): Inverter With Integrated DC Disconnect
(LC): Load Center
(M): Utility Meter
(POI): Point of Interconnection

CONFIDENTIAL – THE INFORMATION HEREIN CONTAINED SHALL NOT BE USED FOR THE BENEFIT OF ANYONE EXCEPT SOLARCITY INC., NOR SHALL IT BE DISCLOSED IN WHOLE OR IN PART TO OTHERS OUTSIDE THE RECIPIENT'S ORGANIZATION, EXCEPT IN CONNECTION WITH THE SALE AND USE OF THE RESPECTIVE SOLARCITY EQUIPMENT, WITHOUT THE WRITTEN PERMISSION OF SOLARCITY INC.

Label Set

SolarCity
3055 Clearview Way
San Mateo, CA 94402
T:(650) 638-1028 F:(650) 638-1029
(888)-SOL-CITY (765-2489) www.solarcity.com

Solar inverters

ABB string inverters
PVI-5000/6000-TL-OUTD
5kW to 6kW

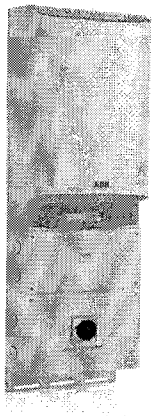

Designed for residential and small commercial PV installations, this inverter fills a specific niche in the ABB product line to cater for those installations producing between 5kW and 20kW.

This inverter includes dual input section to process two strings with independent MPPT.
The high speed and precise MPPT algorithm offers real-time power tracking and energy harvesting.
Flat efficiency curves ensure high efficiency at all output levels ensuring consistent and stable performance across the entire input voltage and output power range.
This outdoor inverter has been designed as a completely sealed unit to withstand the harshest environmental conditions.

The wide input voltage range makes the inverter suitable to low power installations with reduced string size.
The transformerless operation offers high performance efficiencies of up to 97.1%.
Free remote monitoring capability available with every installation. This enables homeowners to view their energy production and offers installers a proactive and economic way of maintaining and troubleshooting the system.

Highlights:

- Single phase and split phase output grid connection.
- Wide input range for increased stringing flexibility.
- The high speed and precise MPPT algorithm offers real time power tracking and improved energy harvesting.
- Outdoor NEMA 4X rated enclosure for unrestricted use under any environmental conditions.
- Integrated DC disconnect switch in compliance with international Standards (-S Version).

Power and productivity for a better world™ ABB

Additional highlights:

- RS-485 communication interface (for connection to laptop or data logger).
- Integrated Arc Fault Detection and Interruption (-A Version).

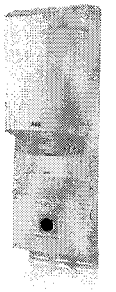

Technical data and types

Type code	PVI-5000-OUTD-US			PVI-6000-OUTD-US		
Input side						
Nominal output power	5000W			6000W		
Maximum output power	5000W			6000W		
Rated grid AC voltage	208V	240V	277V	208V	240V	277V
Input side (DC)						
Number of independent MPPT channels	2					
Maximum usable power for each channel	4000W					
Absolute maximum voltage (Vmax)	600V					
Start-up voltage (Vstart)	200V (adj. 120-350)					
Full power MPPT voltage range	200 - 530V					
Operating MPPT voltage range	0.7 x Vstart - 580V					
Maximum current (Idcmax) for both MPPT in parallel	36A					
Maximum usable current per channel	22A					
Number of wire landing terminals per channel	2 Pairs					
Array wiring termination	Terminal block, pressure clamp, AWG16-AWG6					
Output side (AC)						
Grid connection type	1Ø/2W	Split-Ø/3W	1Ø/2W	1Ø/2W	Split-Ø/3W	1Ø/2W
Adjustable voltage range (Vmin-Vmax)	183V-228V	221V-264V	244V-304V	183V-228V	211V-264V	244V-304V
Grid frequency	60Hz					
Adjustable grid frequency range	57-60.5Hz					
Maximum current ($I_{max(cont)}$) A_{RMS}	$27A_{RMS}$	$23A_{RMS}$	$20A_{RMS}$	$30A_{RMS}$	$28A_{RMS}$	$24A_{RMS}$
Power factor	> 0.995					
Total harmonic distortion at rated power	< 2%					
Contributory fault current[1]	36.25 A_{pk} / $25.63A_{RMS}$	36.5 A_{pk} / $25.81A_{RMS}$	31.75 A_{pk} / $22.45A_{RMS}$	36.25 A_{pk} / $25.63A_{RMS}$	36.5 A_{pk} / $25.81A_{RMS}$	31.75 A_{pk} / $22.45A_{RMS}$
Grid wiring termination type	Terminal block, pressure clamp, AWG14-AWG4					
Input 2						
Reverse polarity protection	Yes					
Over-voltage protection type	Varistor, 2 for each channel					
PV array ground fault detection	Pre start-up Riso and Dynamic GFDI (requires floating arrays)					
Output						
Anti-islanding protection	Meets UL 1741/IEEE1547 requirements			Meets UL 1741/IEEE1547 requirements		
Over-voltage protection type	Varistor, 2 (L_1 - L_2 / L_1 - G)			Varistor, 2 (L_1 - L_2 / L_1 - G)		
Maximum AC OCPD Rating	35A	30A	25A	40A	35A	30A
Efficiency						
Maximum efficiency	97.1%					
CEC efficiency	96%	96.5%	96.5%	96%	96.5%	96.5%
User interface	Graphic display			Graphic display		
Operating performance						
Stand-by consumption	$<8W_{RMS}$			$<8W_{RMS}$		
Night time consumption	$<0.6W_{RMS}$			$<0.6W_{RMS}$		
Communication						
User-interface	16 characters x 2 lines LCD display					
Remote monitoring (1xRS485 incl.)	VSN700 Data Logger (opt)					
Wired local monitoring (1xRS485 incl.)	PVI-USB-RS485_232 (opt.)					
Environmental						
Ambient air operating temperature range	-13°F to +140°F (-25°C to +60°C)			-13°F to +140°F (-25°C to +60°C) with derating above 122°F (50°C)		
Ambient air storage temperature range	-40°F to +176°F (-40°C to +80°C)			-40°F to +176°F (-40°C to +80°C)		
Relative humidity	0-100% RH condensing			0-100% RH condensing		
Acoustic noise emission level	< 50 db (A) @1m			< 50 db (A) @1m		
Maximum operating altitude without derating	6560 ft (2000 m)			6560 ft (2000 m)		

2. Inverter can apply that much current - Breaker will open

ENERGIZING LIFE TOGETHER

REC

HIGH PERFORMANCE SOLAR PANELS

REC PEAK ENERGY Z-LINK SERIES

REC Peak Energy Z-Link Series solar panels are the perfect choice for high-rise solar systems. The combine ongoing product quality with reliable power output. REC combines high quality design and manufacturing standards to provide high performance solar panels with uncompromising quality.

MORE POWER PER FT²

ZEP COMPATIBLE

COMPATIBLE WITH ZEP GROOVE FRAME

US IMPORT DUTY FREE

EASY TO INSTALL

REC PEAK ENERGY Z-LINK SERIES

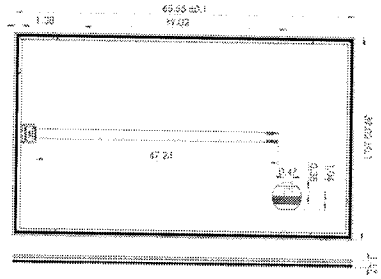

All measurements in inches

ELECTRICAL DATA @ STC	REC260PEZ
Nominal Power - P_{mpp} (Wp)	260
Watt Class Sorting - (Wp)	+/- 5
Nominal Power Voltage - V_{mpp} (V)	30.7
Nominal Power Current - I_{mpp} (A)	8.50
Open Circuit Voltage - V_{oc} (V)	37.8
Short Circuit Current - I_{sc} (A)	9.01
Panel Efficiency (%)	15.8

The electrical characteristics are within +/- 10% of the indicated values of I_{sc}, V_{oc} and P_{mpp} at standard Test conditions (STC). Values at standard test conditions STC (airmass AM 1.5, irradiance 1000 W/m², cell temperature 77°F (25°C)). At low irradiance of 200 W/m² (AM 1.5 & cell temperature 77°F (25°C)) at least 97% of the STC panel efficiency will be achieved

ELECTRICAL DATA @ NOCT	REC260PEZ
Nominal Power - P_{mpp} (Wp)	197
Nominal Power Voltage - V_{mpp} (V)	29.0
Nominal Power Current - I_{mpp} (A)	6.81
Open Circuit Voltage - V_{oc} (V)	35.7
Short Circuit Current - I_{sc} (A)	7.24

Nominal operating cell temperature NOCT (800 W/m², AM 1.5, windspeed 1 m/s, ambient temperature 68°F (20°C)).

CERTIFICATION

c UL us LISTED

UL 1703, Fire rating: Type 1, Class C

WARRANTY

10 year product warranty.
25 year linear power output warranty
(max. degression in performance of 0.7% p.a.).

15.8% EFFICIENCY

10 YEAR PRODUCT WARRANTY

25 YEAR LINEAR POWER OUTPUT WARRANTY

DUTY FREE — US IMPORT DUTY FREE

TEMPERATURE RATINGS

Nominal Operating Cell Temperature (NOCT)	45.7°C (±2°C)
Temperature Coefficient of P_{max}	-0.41 %/°C
Temperature Coefficient of V_{oc}	-0.27 %/°C
Temperature Coefficient of I_{sc}	0.04 %/°C

GENERAL DATA

Cell type	60 REC PE multi crystalline 5 strings of 20 cells in series
Glass	3.2 mm (0.126 in) glass with anti-reflection surface treatment
Back Sheet	Double layer high resistant polyester
Frame	Anodized aluminum (black) Zep Groove compatible
Junction Box	IP67 rated
Connectors	0.155 in (12 AWG) solar cable, 2 x 47.2 in (1.2 m) MC4 compatible
Origin	Made in Singapore

MAXIMUM RATINGS

Operational Temperature	-40 ... +185°F (-40 ... +85°C)
Maximum System Voltage	1000 VDC
Design Load	50 lbs/ft² (2400 Pa) snow load 30 lbs/ft² (1436 Pa) suction load
Max Series Fuse Rating	15 A
Max Reverse Current	15 A

MECHANICAL DATA

Dimensions	65.5 x 39.02 x 1.57 in (1665 x 991 x 40 mm)
Area	17.7 ft² (1.65 m²)
Weight	41 lbs (18.5 kg)

Note: All specifications are subject to change without notice at any time.

REC is a leading global provider of solar energy solutions. With more than 15 years of experience, we offer sustainable, high performing products, services and investments for the solar industry. Together with our partners, we create value by providing solutions that better meet the world's growing energy needs. REC is headquartered in Norway and listed on the Oslo Stock Exchange (Ticker: RECSOL). Our 1,600 employees worldwide generated revenues of USD 647 million in 2013.

REC

www.recgroup.com

ENGINEERING PERMIT APPLICATION

RECEIVING CLERK: 3
PERMIT #: _____

BLOCK: 210.03 **LOT:** 8 **ADDRESS:** 12 Hollycrest Dr

IDENTIFICATION:

1. **WORK SITE ADDRESS:** 12 Hollycrest Dr, Brick NJ 08723
2. **NAME OF OWNER IN FEE:** Jonathan Dusza
   ADDRESS: 12 Hollycrest Dr **PHONE** [redacted]
   Brick NJ 08723 **FAX #:** ( )
3. **PRINCIPAL CONTRACTOR:** Lyndsey Jobe (SolarCity)
   ADDRESS: 9 Corporate Drive **PHONE #:** (609) 642-9018
   Cranbury, NJ 08512 **FAX #:** (609) 269-2166
4. **ARCHITECT OR ENGINEER:** SolarCity
   ADDRESS: 9 Corporate Dr, Cranbury, NJ 08512 **PHONE: #** (609) 642-9018
5. **RESPONSIBLE PERSON FOR WORK:** Lyndsey Jobe (SolarCity)
   ADDRESS: 9 Corporate Drive, Cranbury, NJ 08512

PHONE #: (609) 642-9018 **FAX #:** (609) 269-2166 **E-MAIL:** ljobe@SolarCity.com

PROJECT DESCRIPTION: ☐ GRADING/CLEARING ☐ ROAD OPENING
☐ SOIL REMOVAL/FILL ☐ RETAINING WALL ☐ POOL
☐ BULKHEAD/DOCK ☐ DWELLING ☐ TREE REMOVAL
☒ OTHER Solar Panels
LENGTH: _____ **WIDTH:** _____ **HEIGHT:** _____

FEE SUMMARY:

APPLICATION FEE:	$
REVIEW FEE:	$
INSPECTION FEE:	$
OTHER _____ :	$
BOND(S):	$
TOTAL:	$

SPECIAL CONDITIONS:

OCEAN COUNTY SOILS: _____
DRAINAGE EASEMENTS: _____
UTILITY EASEMENTS: _____
CONSERVATION EASEMENTS: _____
FEMA REQUIREMENTS: _____
D.E.P. PERMITS: _____
BOARD APPROVAL: ☐ PB ☐ ZB
APPLICATION NUMBER: _____
APPROVED DATE: _____

ENGINEERING REVIEW:

DATE RECEIVED: _____ **DATE REJECTED:** _____ **DATE APPROVED:** _____ **INITIALS:** _____

ELECTRICAL SUBCODE
TECHNICAL SECTION

NEC 2011 Compliant (Grace Period)

Date Received
Control #
Date Issued
Permit #

A. IDENTIFICATION—APPLICANT: COMPLETE ALL APPLICABLE INFORMATION. WHEN CHANGING CONTRACTORS, NOTIFY THIS OFFICE. CALL UTILITY DIG NO: 1-800-272-1000.

Block 210.03 Lot 8 Qualification Code

Work Site Location 12 Hollycrest Dr, Brick NJ 08723

Owner in Fee: Jonathan Dusza

Tel. [redacted] e-mail

Address 12 Hollycrest Dr, Brick NJ 08723
street municipality zip code

Contractor: SolarCity Corporation Tel. (609) 642-9018

Address 9 Corporate Drive e-mail BStrasser@SolarCity.com
Cranbury, NJ 08512

Contractor License No. 34EI01732700 Exp. Date 03/31/18

Home Improvement Contractor Registration No. or Exemption Reason (if applicable):

Federal Emp. ID No. 020781046 FAX: (609) 269-2166

B. ELECTRICAL CHARACTERISTICS

Use Group Present SFD Proposed No Change

[ ] Pole/Pad # [ ] Temporary [ ] Other

Building Occupied as Utility Co. PSE&G

Est. Cost of Elec. Work $ 12,913

C. CERTIFICATION IN LIEU OF OATH

I hereby certify that I am the (agent of) owner of record and am authorized to make this application and perform the work listed on this application.

Applicant sign/Contractor sign and seal here:

Print name here: Javier Hurtado

☒ Licensed Elec. Contractor [ ] Certif'd Landscape Irrigation Cont'r [ ] Exempt Applicant

D. TECHNICAL SITE DATA

DESCRIPTION OF WORK:
Install sleekmount (rail-less) system for (33) solar panels

QTY.	SIZE	ITEMS	FEE (Office Use Only)
		Lighting Fixtures	
		Receptacles	
		Switches	
		Detectors	
		Light Poles	
		Motors—Fract. HP	
		Emergency & Exit Lights	
		Communications Points	
		Alarm Devices/F.A.C. Panel	
0		TOTAL NUMBERS	$
		Pool Permit/with UW Lights	
		Storable Pool/Spa/Hot Tub	
		KW Elec. Range/Receptacle	
		KW Oven/Surface Unit	
		KW Elec. Water Heater	
		KW Elec. Dryer/Receptacle	
		KW Dishwasher	
		HP Garbage Disposal	
		KW Central A/C Unit	
		HP/KW Space Heater/Air Handler	
		KW Baseboard Heat	
		HP Motors 1/+ HP	
		KW Transformer/Generator	
1	60	AMP DISCONNECT	
1	25	AMP	
		AMP	
1	9	KW PV Array	

JOB SUMMARY (Office Use Only)

PLAN REVIEW

[ ] No Plans Required

[ ] Partial -Underslab Utilities Approved
Date: Approved by:

[ ] Electric Plans Approved
Date: Approved by:

Joint Plan Review Required:
[ ] Bldg. [ ] Plumb. [ ] Fire. [ ] Elev.

SUBCODE APPROVAL for PERMIT
Date:
Approved by:

SUBCODE APPROVAL for CERTIFICATE
[ ] CO [ ] CCO [ ] CA
Date:
Approved by:

INSPECTIONS Type:	Dates (Month/Day) Failure	Failure	Approval	Initial
Rough				
Barrier-Free				
Trench				
Temp. Serv.				
Constr. Serv.				
TCO				
Other				
Service				
Final				
Barrier-Free				

Temp. Cut-in-Card Date Issued
Final Cut-in-Card Date Issued
Annual Pool Inspection
Date of Grounding and Bonding Certification

Administrative Surcharge $
Minimum Fee $
State Permit Surcharge Fee $
TOTAL FEE $

U.C.C. F120 (rev. 11/09)
Internet version

Applicant: When submitting this form to your Local Construction Code Enforcement Office, please provide one original plus three photocopies.